PROJECT MANUAL

TOWN OF ELLINGTON

CONNECTICUT

Expansion & Renovate as New
CRYSTAL LAKE ELEMENTARY SCHOOL
Phase 1 of 3

284 Sandy Beach Road
Ellington, Connecticut 06029

Connecticut D.O.E. Project No. 048-0058 EA/RR/PS

VOLUME 2 OF 3

DD Estimate Submission: April 23, 2013
BC Approval/PCT Submission: June 18, 2013
Issued for Bid: November 26, 2013

Architect/Engineers/Interior Designers
Silver/Petrucelli + Associates, Inc.
3190 Whitney Avenue
Hamden, Connecticut 06518

EXPANSION & RENOVATE AS NEW – PHASE 1

CRYSTAL LAKE ELEMENTARY SCHOOL
284 SANDY BEACH ROAD
ELLINGTON, CT 06029
STATE PROJECT NO. 048-0058 EA/RR/PS

S/P+A PROJECT NO. 12.140

DIVISION 0 – BIDDING AND CONTRACT DOCUMENTS		PAGES
	Invitation to Bid	1
	Instructions to Bidders (AIA A701)	6
	Supplementary Instructions to Bidders	7
	Bid Form	3
	Standard Form of Agreement between Owner and Contractor (AIA A101)	7
	General Conditions of the Contract for Construction (AIA A201)	40
	Supplementary General Conditions	9
	Project Application and Project Certificate for Payment (AIA G702)	1
	Project Application Continuation Sheet (AIA G703)	1
	Prevailing Wage Rate Information	33
	Payroll Certification for Public Works Projects	3
	2013-14 School Calendar	1
	Project Team Directory	3
	Drawing List	6

DIVISION 1 – GENERAL REQUIREMENTS

Section 011401	Preservation and Restoration of Site Features	4
Section 012100	Allowances	4
Section 012200	Unit Prices	2
Section 012300	Alternates	2
Section 012500	Substitution Procedures	4
Section 012600	Contract Modification Procedures	3
Section 012900	Payment Procedures	5
Section 013100	Project Management and Coordination	10
Section 013200	Construction Progress Documentation	7
Section 013233	Photographic Documentation	2
Section 013300	Submittal Procedures	10
Section 013543	Environmental Protection	9
Section 014000	Quality Requirements	10
Section 014127	Stormwater General Permit	60
Section 014200	References	10
Section 015000	Temporary Facilities and Controls	8
Section 015713	Temporary Erosion and Sedimentation Controls	12
Section 015714	Temporary Dust Control	3
Section 016000	Product Requirements	5
Section 017300	Execution	9
Section 017419	Construction Waste Management and Disposal	11
Section 017700	Closeout Procedures	4
Section 017823	Operation and Maintenance Data	8

Section 017839	Project Record Documents	4
Section 017900	Demonstration and Training	5
Section 018113	Sustainable Design Requirements	23
	Compliance Checklist – Schools	2
Section 019103	Building Commissioning Requirements	25

DIVISION 2 – EXISTING CONDITIONS

Section 023219	Exploratory Excavations	3
Section 024119	Selective Demolition	8
Section 024123	Site Demolition	3
Section 024213	Reclamation of Acoustical Ceiling Panels	3
Section 024400	Control of Existing Flows	2
Section 026500	Underground Storage Tank Removal	10
Section 028200	Asbestos Remediation	24
Section 028300	Lead Remediation and Awareness	13
Section 028433	PCB Remediation	18
Section 028500	Mercury Remediation	10
Section 029500	Hazardous/Regulated Item/Material Management	16
	Hazardous Material Survey, dated January 10, 2013	279

DIVISION 3 – CONCRETE

Section 033100	Concrete Work	17
Section 033200	Site Cast-In-Place Concrete	20
Section 035413	Gypsum Cement Underlayment	4

DIVISION 4 – MASONRY

Section 040120	Maintenance of Unit Masonry	7
Section 042000	Unit Masonry	19

DIVISION 5 – METALS

Section 051200	Structural Steel	10
Section 052100	Steel Joists	4
Section 053100	Metal Decking	4
Section 055000	Metal Fabrications	9
Section 055119	Metal Grating Stairs	5
Section 055200	Site Metal Railings	5
Section 055213	Pipe Tube and Railings	8
Section 055813	Column Covers	4

DIVISION 6 – WOOD, PLASTICS AND COMPOSITES

Section 061000	Rough Carpentry	7
Section 061516	Wood Roof Decking	4
Section 061600	Sheathing	5
Section 062013	Exterior Finish Carpentry	5
Section 062023	Interior Finish Carpentry	7
Section 064113	Wood Veneer-Faced Architectural Cabinets	8

Section 064116	Plastic Laminate-Faced Architectural Cabinets	7

DIVISION 7 – THERMAL AND MOISTURE PROTECTION

Section 071113	Bituminous Dampproofing	3
Section 072100	Thermal Insulation	5
Section 072726	Fluid-Applied Membrane Air Barriers	7
Section 073113	Asphalt Shingles	5
Section 074213.23	Metal Composite Material Wall Panels	7
Section 075423	Thermoplastic Polyolefin (TPO) Roofing	9
Section 076200	Sheet Metal Flashing and Trim	11
Section 077100	Roof Specialties	6
Section 077200	Roof Accessories	6
Section 078100	Applied Fireproofing	6
Section 078413	Penetration Firestopping	4
Section 079200	Joint Sealants	8
Section 079500	Expansion Control	6

DIVISION 8 – OPENINGS

Section 081113	Hollow Metal Doors and Frames	13
Section 081416	Flush Wood Doors	9
Section 083113	Access Doors and Frames	6
Section 083313	Coiling Counter Doors	16
Section 083473	Sound Control Door Assemblies	9
Section 084113	Aluminum-Framed Entrances and Storefronts	10
Section 084413	Glazed Aluminum Curtain Walls	9
Section 087100	Door Hardware	20
Section 088000	Glazing	14
Section 089000	Louvers and Vents	5

DIVISION 9 – FINISHES

Section 090000	Schedule of Finishes	13
Section 092216	Non-Structural Metal Framing	7
Section 092400	Cement Plastering	4
Section 092900	Gypsum Board	7
Section 093000	Tiling	11
Section 095113	Acoustical Panel Ceilings	9
Section 095133	Acoustical Metal Pan Ceilings	7
Section 095423	Linear Metal Ceilings	7
Section 096400	Wood Flooring	5
Section 096466	Wood Athletic Flooring	7
Section 096513	Resilient Base and Accessories	6
Section 096519	Resilient Tile Flooring	6
Section 096536	Static-Control Resilient Flooring	6
Section 096543	Linoleum Flooring	5
Section 096623	Resinous Matrix Terrazzo Flooring	6
Section 096766	Fluid-Applied Athletic Flooring	5
Section 096813	Tile Carpeting	5
Section 096816	Sheet Carpeting	6

Section 097200	Wall Coverings	5
Section 098433	Sound Absorbing Units	7
Section 098439	Acoustical Ceiling Clouds	5
Section 099113	Exterior Painting	6
Section 099123	Interior Painting	8
Section 099300	Staining and Transparent Finishing	5
Section 099600	High Performance Coatings	6
Section 099646	Intumescent Painting	6

DIVISION 10 – SPECIALTIES

Section 101100	Visual Display Units	6
Section 101200	Display Cases	12
Section 101400	Signage	7
Section 101453	Traffic Signage	7
Section 102113	Toilet Compartments	4
Section 102123	Cubicles	4
Section 102600	Wall and Door Protection	5
Section 102800	Toilet, Bath and Laundry Accessories	6
Section 104413	Fire Extinguisher Cabinets	5
Section 104416	Fire Extinguishers	3
Section 105113	Metal Lockers	7
Section 107516	Flagpoles	5

DIVISION 11 – EQUIPMENT

Section 110513	Common Motor Requirements for Equipment	3
Section 114000	Food Service Specifications	222
Section 116623	Gymnasium Equipment	10
Section 116833	Athletic Field Equipment	3

DIVISION 12 – FURNISHINGS

Section 122413	Roller Window Shades	7
Section 123553.15	Phenolic Laboratory Casework	10
Section 123661	Simulated Stone Countertops	2
Section 124813	Entrance Floor Mats and Frames	3
Section 124816	Entrance Floor Grilles	4
Section 126600	Telescoping Stands	6
Section 129300	Site Furnishings	4

DIVISION 13 – SPECIAL CONSTRUCTION

Section 132700	Vaults	8

DIVISION 21 – FIRE SUPPRESSION

Section 210500	Common Work Results for Fire Suppression	9
Section 210548	Vibration and Seismic Controls for Fire-Suppression Piping and Equipment	4
Section 210553	Identification for Fire-Suppression Piping and Equipment	4

Section 211100	Facility Fire-Suppression Water-Service Piping	9
Section 211313	Wet-Pipe Sprinkler Systems	20
Section 213113	Electric Drive, Centrifugal Fire Pumps	8
Section 213400	Pressure-Maintenance Pumps	4
Section 213900	Controllers for Fire Pump Drivers	11

DIVISION 22 – PLUMBING

Section 220500	Common Work Results for Plumbing	13
Section 220516	Expansion Fittings and Loops for Plumbing Piping	4
Section 220519	Meters and Gages for Plumbing Piping	4
Section 220523	General-Duty Valves for Plumbing Piping	6
Section 220529	Hangers and Supports for Plumbing Piping and Equipment	11
Section 220548	Vibration and Seismic Controls for Plumbing Piping and Equipment	8
Section 220553	Identification for Plumbing Piping and Equipment	5
Section 220700	Plumbing Insulation	16
Section 221116	Domestic Water Piping	14
Section 221119	Domestic Water Piping Specialties	9
Section 221123	Domestic Water Pumps	4
Section 221313	Facility Sanitary Sewers	5
Section 221316	Sanitary Waste and Vent Piping	16
Section 221319	Sanitary Waste Piping Specialties	8
Section 221329	Sanitary Sewerage Pumps	3
Section 221413	Facility Storm Drainage Piping	9
Section 221423	Storm Drainage Piping Specialties	6
Section 223400	Fuel-Fired, Domestic Water Heaters	8
Section 224000	Plumbing Fixtures	10
Section 224500	Emergency Plumbing Fixtures	5
Section 224700	Drinking Fountains and Water Coolers	5

DIVISION 23 – HEATING, VENTILATING AND AIR CONDITIONING

Section 230000	Basic Mechanical Requirements	5
Section 230500	Common Work Results for HVAC	13
Section 230513	Common Motor Requirements for HVAC Equipment	3
Section 230516	Expansion Fittings and Loops for HVAC Piping	6
Section 230519	Meters and Gages for HVAC Piping	10
Section 230523	General Duty Valves for HVAC Piping	10
Section 230529	Hangers and Supports for HVAC Piping and Equipment	12
Section 230548	Vibration and Seismic Controls for HVAC Piping and Equipment	11
Section 230553	Identification for HVAC Piping and Equipment	7
Section 230593	Testing, Adjusting, and Balancing for HVAC	17
Section 230713	Duct Insulation	18
Section 230719	HVAC Piping Insulation	20
Section 230800	Commissioning of HVAC	5
Section 230900	Automatic Temperature Controls	43
Section 231123	Facility Natural Gas Piping	17
Section 232113	Hydronic Piping	16
Section 232123	Hydronic Pumps	6
Section 232300	Refrigerant Piping	12
Section 233113	Metal Ducts	17

Section 233300	Air Duct Accessories	14
Section 233423	HVAC Power Ventilators	8
Section 233713	Diffusers, Registers, and Grilles	4
Section 235100	Breechings, Chimneys and Stacks	5
Section 235223	Condensing Boilers	9
Section 237400	Energy Recovery Ventilators	15
Section 238126	Split System Air Conditioner	6
Section 238216	Hydronic Air Coils	3
Section 238233	Convectors	4
Section 238236	Finned-Tube Radiation Heaters	4
Section 238239	Unit Heaters	7

DIVISION 26 – ELECTRICAL

Section 260500	Common Work Results for Electrical	5
Section 260509	Electrical Demolition Requirements	2
Section 260519	Low-Voltage Electrical Power Conductors and Cables	7
Section 260523	Control-Voltage Electrical Power Cables	12
Section 260526	Grounding and Bonding for Electrical Systems	9
Section 260529	Hangers and Supports for Electrical Systems	6
Section 260533	Raceway and Boxes for Electrical Systems	16
Section 260543	Underground Ducts and Raceways for Electrical Systems	17
Section 260548	Vibration and Seismic Controls for Electrical Systems	8
Section 260553	Identification for Electrical Systems	13
Section 260573	Overcurrent Protective Device Coordination Study	6
Section 260923	Lighting Control Devices	10
Section 262413	Switchboards	18
Section 262416	Panelboards	16
Section 262713	Electricity Metering	6
Section 262726	Wiring Devices	14
Section 262813	Fuses	4
Section 262816	Enclosed Switches and Circuit Breakers	11
Section 262913	Enclosed Controllers	22
Section 262923	Variable-Frequency Motor Controllers	9
Section 263213	Engine Generators	8
Section 263600	Transfer Switches	9
Section 264313	Transient-Voltage Suppression for Low-Voltage Electrical Power Circuits	8
Section 265100	Interior Lighting	14
Section 265600	Exterior Lighting	15

DIVISION 27 – COMMUNICATIONS

Section 270528	Pathways for Communications Systems	12
Section 270536	Cable Tray for Communications Systems	10
Section 270544	Sleeves and Sleeve Seals for Communications Pathways and Cabling	4
Section 271100	Communications Equipment Room Fittings	7
Section 271300	Communications Backbone Cabling	12
Section 271500	Communications Horizontal Cabling	13
Section 274100	Audio Video Systems	8
Section 275116	Public Address System	31
Section 275313	Clock System	9

DIVISION 28 – ELECTRONIC SAFETY AND SECURITY

Section 280500	Security Conductors & Cables	4
Section 280528	Pathways for Security Systems	12
Section 281300	Access Control	16
Section 281600	Intrusion Detection	14
Section 282300	Video Surveillance	22
Section 283111	Digital, Addressable Fire Alarm System	17

DIVISION 31 – EARTHWORK

Section 311100	Clearing and Grubbing	4
Section 312113	Radon Mitigation	6
Section 312310	Earthwork	23
	Preliminary Geotechnical Study, dated January 14, 2013	34
Section 312319	Dewatering	4
Section 312543	Geotextile Layer Separation	5
Section 313600	Gabions	4
Section 313700	Rip Rap	3
Section 314143	Sheeting and Staybracing	4

DIVISION 32 – EXTERIOR IMPROVEMENTS

Section 320116	In-Place Pavement Reclamation	3
Section 321216	Bituminous Concrete Pavement	15
Section 321416	Unit Pavers	7
Section 321623	Curbing	4
Section 321723	Pavement Markings	10
Section 321823	Infield Mix	3
Section 323113	Chain Link Fences and Gates	15
Section 323119	Ornamental Fences and Gates	3
Section 323300	Bollards	3
Section 329000	Planting	21
Section 329201	Root Zone Mix for Ballfields	4
Section 329219	Seeding	16

DIVISION 33 – UTILITIES

Section 333100	Sanitary Sewer	18
Section 334000	Storm Drainage System	14

END OF TABLE OF CONTENTS

SECTION 076200 - SHEET METAL FLASHING AND TRIM

PART 1 - GENERAL

1.1 RELATED DOCUMENTS

A. Drawings and general provisions of the Contract, including General and Supplementary Conditions and Division 01 Specification Sections, apply to this Section.

1.2 SUMMARY

A. Section Includes:

1. Formed roof-drainage sheet metal fabrications.
2. Formed low-slope roof sheet metal fabrications.
3. Formed steep-slope roof sheet metal fabrications.
4. Formed equipment support flashing.

B. Related Requirements:

1. Section 061000 "Rough Carpentry" for wood nailers, curbs, and blocking.
2. Section 077200 "Roof Accessories" for set-on-type curbs, equipment supports, roof hatches, vents, and other manufactured roof accessory units.
3. Section 079500 "Expansion Control" for manufactured sheet metal expansion-joint covers.

1.3 COORDINATION

A. Coordinate sheet metal flashing and trim layout and seams with sizes and locations of penetrations to be flashed, and joints and seams in adjacent materials.

B. Coordinate sheet metal flashing and trim installation with adjoining roofing and wall materials, joints, and seams to provide leakproof, secure, and noncorrosive installation.

1.4 PREINSTALLATION MEETINGS

A. Preinstallation Conference: Conduct conference at Project site.

1. Review construction schedule. Verify availability of materials, Installer's personnel, equipment, and facilities needed to make progress and avoid delays.
2. Review special roof details, roof drainage, roof-penetration flashing, equipment curbs, and condition of other construction that affect sheet metal flashing and trim.
3. Review requirements for insurance and certificates if applicable.
4. Review sheet metal flashing observation and repair procedures after flashing installation.

1.5 ACTION SUBMITTALS

A. Product Data: For each type of product.

1. Include construction details, material descriptions, dimensions of individual components and profiles, and finishes for each manufactured product and accessory.

B. Shop Drawings: For sheet metal flashing and trim.

1. Include plans, elevations, sections, and attachment details.
2. Detail fabrication and installation layouts, expansion-joint locations, and keyed details. Distinguish between shop- and field-assembled work.
3. Include identification of material, thickness, weight, and finish for each item and location in Project.
4. Include details for forming, including profiles, shapes, seams, and dimensions.
5. Include details for joining, supporting, and securing, including layout and spacing of fasteners, cleats, clips, and other attachments. Include pattern of seams.
6. Include details of termination points and assemblies.
7. Include details of expansion joints and expansion-joint covers, including showing direction of expansion and contraction from fixed points.
8. Include details of roof-penetration flashing.
9. Include details of edge conditions, including eaves, ridges, valleys, rakes, crickets, and counterflashings as applicable.
10. Include details of special conditions.
11. Include details of connections to adjoining work.
12. Detail formed flashing and trim at scale of not less than 3 inches per 12 inches (1:5).

C. Samples: For each type of sheet metal and accessory indicated with factory-applied finishes.

1.6 INFORMATIONAL SUBMITTALS

A. Qualification Data: For fabricator.

B. Product Certificates: For each type of coping and roof edge flashing that is SPRI ES-1 tested and FM Approvals approved.

C. Product Test Reports: For each product, for tests performed by a qualified testing agency.

D. Sample Warranty: For special warranty.

1.7 CLOSEOUT SUBMITTALS

A. Maintenance Data: For sheet metal flashing and trim, and its accessories, to include in maintenance manuals.

1.8 QUALITY ASSURANCE

A. Fabricator Qualifications: Employs skilled workers who custom fabricate sheet metal flashing and trim similar to that required for this Project and whose products have a record of successful in-service performance.

1. For copings and roof edge flashings that are SPRI ES-1 tested and FM Approvals approved, shop shall be listed as able to fabricate required details as tested and approved.

1.9 DELIVERY, STORAGE, AND HANDLING

A. Do not store sheet metal flashing and trim materials in contact with other materials that might cause staining, denting, or other surface damage. Store sheet metal flashing and trim materials away from uncured concrete and masonry.

B. Protect strippable protective covering on sheet metal flashing and trim from exposure to sunlight and high humidity, except to extent necessary for period of sheet metal flashing and trim installation.

1.10 WARRANTY

A. Special Warranty on Finishes: Manufacturer agrees to repair finish or replace sheet metal flashing and trim that shows evidence of deterioration of factory-applied finishes within specified warranty period.

1. Exposed Panel Finish: Deterioration includes, but is not limited to, the following:

a. Color fading more than 5 Hunter units when tested according to ASTM D 2244.
b. Chalking in excess of a No. 8 rating when tested according to ASTM D 4214.
c. Cracking, checking, peeling, or failure of paint to adhere to bare metal.

2. Finish Warranty Period: Twenty (20) years from date of Substantial Completion.

PART 2 - PRODUCTS

2.1 PERFORMANCE REQUIREMENTS

A. General: Sheet metal flashing and trim assemblies shall withstand wind loads, structural movement, thermally induced movement, and exposure to weather without failure due to defective manufacture, fabrication, installation, or other defects in construction. Completed sheet metal flashing and trim shall not rattle, leak, or loosen, and shall remain watertight.

B. Sheet Metal Standard for Flashing and Trim: Comply with NRCA's "The NRCA Roofing Manual" and SMACNA's "Architectural Sheet Metal Manual" requirements for dimensions and profiles shown unless more stringent requirements are indicated.

C. Sheet Metal Standard for Copper: Comply with CDA's "Copper in Architecture Handbook." Conform to dimensions and profiles shown unless more stringent requirements are indicated.

D. FM Approvals Listing: Manufacture and install roof edge flashings that are listed in FM Approvals' "RoofNav" and approved for windstorm classification, Class 1-120. Identify materials with name of fabricator and design approved by FM Approvals.

E. SPRI Wind Design Standard: Manufacture and install roof edge flashings tested according to SPRI ES-1 and capable of resisting the following design pressure:

1. Design Pressure: As indicated on Drawings.

F. Recycled Content of Copper-Sheet Flashing and Trim: Postconsumer recycled content plus one-half of preconsumer recycled content not less than forty percent (40%).

G. Thermal Movements: Allow for thermal movements from ambient and surface temperature changes to prevent buckling, opening of joints, overstressing of components, failure of joint sealants, failure of connections, and other detrimental effects. Base calculations on surface temperatures of materials due to both solar heat gain and nighttime-sky heat loss.

1. Temperature Change: 120 deg F (67 deg C), ambient; 180 deg F (100 deg C), material surfaces.

2.2 SHEET METALS

A. General: Protect mechanical and other finishes on exposed surfaces from damage by applying strippable, temporary protective film before shipping.

B. Copper Sheet: ASTM B 370, cold-rolled copper sheet, H00 or H01 temper.

1. Nonpatinated Exposed Finish: Mill.

C. Aluminum Sheet: ASTM B 209, alloy as standard with manufacturer for finish required, with temper as required to suit forming operations and performance required; with smooth, flat surface.

1. Exposed Coil-Coated Finish:

a. Two-Coat Fluoropolymer: AAMA 620. Fluoropolymer finish containing not less than seventy percent (70%) PVDF resin by weight in color coat. Prepare, pretreat, and apply coating to exposed metal surfaces to comply with coating and resin manufacturers' written instructions.

1. Color: As selected by Architect and Owner from manufacturer's full range.

2. Concealed Finish: Pretreat with manufacturer's standard white or light-colored acrylic or polyester backer finish, consisting of prime coat and wash coat with minimum total dry film thickness of 0.5 mil.

2.3 UNDERLAYMENT MATERIALS

A. Felt: As indicated in Section 073113 “Asphalt Shingles”.

B. Slip Sheet: Rosin-sized building paper, 3 lb/100 sq. ft. minimum.

2.4 MISCELLANEOUS MATERIALS

A. General: Provide materials and types of fasteners, solder, protective coatings, sealants, and other miscellaneous items as required for complete sheet metal flashing and trim installation and as recommended by manufacturer of primary sheet metal unless otherwise indicated.

B. Fasteners: Wood screws, annular threaded nails, self-tapping screws, self-locking rivets and bolts, and other suitable fasteners designed to withstand design loads and recommended by manufacturer of primary sheet metal.

1. General: Blind fasteners or self-drilling screws, gasketed, with hex-washer head.

a. Exposed Fasteners: Heads matching color of sheet metal using plastic caps or factory-applied coating. Provide metal-backed EPDM or PVC sealing washers under heads of exposed fasteners bearing on weather side of metal.
b. Blind Fasteners: High-strength aluminum or stainless-steel rivets suitable for metal being fastened.
c. Spikes and Ferrules: Same material as gutter; with spike with ferrule matching internal gutter width.

2. Fasteners for Copper Sheet: Copper, hardware bronze or passivated Series 300 stainless steel.
3. Fasteners for Aluminum Sheet: Aluminum or Series 300 stainless steel.

C. Solder:

1. For Copper: ASTM B 32, with maximum lead content of 0.2 percent.

D. Sealant Tape: Pressure-sensitive, one hundred percent (100%) solids, polyisobutylene compound sealant tape with release-paper backing. Provide permanently elastic, nonsag, nontoxic, nonstaining tape ½ inch wide and 1/8 inch thick.

E. Elastomeric Sealant: ASTM C 920, elastomeric polysulfide polymer sealant; of type, grade, class, and use classifications required to seal joints in sheet metal flashing and trim and remain watertight.

F. Bituminous Coating: Cold-applied asphalt emulsion according to ASTM D 1187.

G. Asphalt Roofing Cement: ASTM D 4586, asbestos free, of consistency required for application.

2.5 FABRICATION, GENERAL

A. General: Custom fabricate sheet metal flashing and trim to comply with details shown and recommendations in cited sheet metal standard that apply to design, dimensions, geometry, metal thickness, and other characteristics of item required. Fabricate sheet metal flashing and trim in shop to greatest extent possible.

1. Fabricate sheet metal flashing and trim in thickness or weight needed to comply with performance requirements, but not less than that specified for each application and metal.
2. Obtain field measurements for accurate fit before shop fabrication.
3. Form sheet metal flashing and trim to fit substrates without excessive oil canning, buckling, and tool marks; true to line, levels, and slopes; and with exposed edges folded back to form hems.
4. Conceal fasteners and expansion provisions where possible. Do not use exposed fasteners on faces exposed to view.

B. Fabrication Tolerances: Fabricate sheet metal flashing and trim that is capable of installation to a tolerance of ¼ inch in 20 feet on slope and location lines indicated on Drawings and within 1/8-inch offset of adjoining faces and of alignment of matching profiles.

C. Expansion Provisions: Form metal for thermal expansion of exposed flashing and trim.

1. Form expansion joints of intermeshing hooked flanges, not less than 1 inch deep, filled with butyl sealant concealed within joints.
2. Use lapped expansion joints only where indicated on Drawings.

D. Sealant Joints: Where movable, nonexpansion-type joints are required, form metal to provide for proper installation of elastomeric sealant according to cited sheet metal standard.

E. Fabricate cleats and attachment devices from same material as accessory being anchored or from compatible, noncorrosive metal.

F. Fabricate cleats and attachment devices of sizes as recommended by cited sheet metal standard and by FM Global Property Loss Prevention Data Sheet 1-49 for application, but not less than thickness of metal being secured.

G. Seams: Fabricate nonmoving seams with flat-lock seams. Form seams and seal with elastomeric sealant unless otherwise recommended by sealant manufacturer for intended use.

H. Do not use graphite pencils to mark metal surfaces.

2.6 ROOF-DRAINAGE SHEET METAL FABRICATIONS

A. Hanging Gutters: Fabricate to cross section required, complete with end pieces, outlet tubes, and other accessories as required. Fabricate in minimum 96-inch-long sections. Furnish flat-stock gutter brackets and twisted gutter spacers and straps fabricated from same metal as gutters, of size recommended by cited sheet metal standard but with thickness not less than twice the gutter thickness. Fabricate expansion joints, expansion-joint covers, and gutter accessories from same metal as gutters.

1. Gutter Profile: As indicated on Drawings.

2. Expansion Joints: Lap type.
3. Gutters with Girth 21 to 25 Inches (Type 2): Fabricate from the following materials:

a. Aluminum: 0.050 inch thick.

B. Downspouts: Fabricate round downspouts to dimensions indicated, complete with mitered elbows. Furnish with metal hangers from same material as downspouts and anchors. Shop fabricate elbows.

1. Fabricate from the following materials:

a. Aluminum: 0.040 inch thick.

2.7 LOW-SLOPE ROOF SHEET METAL FABRICATIONS

A. Roof-to-Wall Transition Expansion-Joint Cover: Fabricate from the following materials: Shop fabricate interior and exterior corners.

1. Copper: 16 oz./sq. ft.

B. Counterflashing: Shop fabricate interior and exterior corners. Fabricate from the following materials:

1. Copper: 16 oz./sq. ft.

C. Reglets: Units of type, material, and profile required, formed to provide secure interlocking of separate reglet and counterflashing pieces, and compatible with flashing indicated with factory-mitered and -welded corners and junctions.

1. Copper: 16 oz./sq. ft.
2. Surface-Mounted Type: Provide with slotted holes for fastening to substrate, with neoprene or other suitable weatherproofing washers, and with channel for sealant at top edge.
3. Masonry Type: Provide with offset top flange for embedment in masonry mortar joint.
4. Accessories:

a. Counterflashing Wind-Restraint Clips: Provide clips to be installed before counterflashing to prevent wind uplift of counterflashing's lower edge.

2.8 STEEP-SLOPE ROOF SHEET METAL FABRICATIONS

A. Step Flashing: Fabricate from the following materials:

1. Aluminum: 0.032 inch thick.

B. Drip Edges: Fabricate from the following materials:

1. Aluminum: 0.032 inch thick.

C. Eave, Rake Flashing: Fabricate from the following materials:

1. Aluminum: 0.032 inch thick.

D. Counterflashing: Fabricate from the following materials:

1. Aluminum: 0.032 inch thick.

2.9 MISCELLANEOUS SHEET METAL FABRICATIONS

A. Sill Flashing, Column Wraps, Etc.: Fabricate from the following materials:

1. Aluminum: 0.063 inch thick.

PART 3 - EXECUTION

3.1 EXAMINATION

A. Examine substrates, areas, and conditions, with Installer present, for compliance with requirements for installation tolerances, substrate, and other conditions affecting performance of the Work.

1. Verify compliance with requirements for installation tolerances of substrates.
2. Verify that substrate is sound, dry, smooth, clean, sloped for drainage, and securely anchored.

3. Verify that air- or water-resistant barriers have been installed over sheathing or backing substrate to prevent air infiltration or water penetration.

B. Proceed with installation only after unsatisfactory conditions have been corrected.

3.2 UNDERLAYMENT INSTALLATION

A. Felt Underlayment: Install felt underlayment, wrinkle free, using adhesive to minimize use of mechanical fasteners under sheet metal flashing and trim. Apply in shingle fashion to shed water, with lapped joints of not less than 2 inches.

B. Apply slip sheet, wrinkle free, over underlayment before installing sheet metal flashing and trim.

3.3 INSTALLATION, GENERAL

A. General: Anchor sheet metal flashing and trim and other components of the Work securely in place, with provisions for thermal and structural movement. Use fasteners, protective coatings, separators, sealants, and other miscellaneous items as required to complete sheet metal flashing and trim system.

1. Install sheet metal flashing and trim true to line, levels, and slopes. Provide uniform, neat seams with minimum exposure of solder, welds, and sealant.
2. Install sheet metal flashing and trim to fit substrates and to result in watertight performance. Verify shapes and dimensions of surfaces to be covered before fabricating sheet metal.
3. Space cleats not more than 12 inches apart. Attach each cleat with at least two (2) fasteners. Bend tabs over fasteners.
4. Install exposed sheet metal flashing and trim with limited oil canning, and free of buckling and tool marks.
5. Torch cutting of sheet metal flashing and trim is not permitted.
6. Do not use graphite pencils to mark metal surfaces.

B. Metal Protection: Where dissimilar metals contact each other, or where metal contacts pressure-treated wood or other corrosive substrates, protect against galvanic action or corrosion by painting contact surfaces with bituminous coating or by other permanent separation as recommended by sheet metal manufacturer or cited sheet metal standard.

1. Underlayment: Where installing sheet metal flashing and trim directly on cementitious or wood substrates, install underlayment and cover with slip sheet.

C. Expansion Provisions: Provide for thermal expansion of exposed flashing and trim. Space movement joints at maximum of 10 feet with no joints within 24 inches of corner or intersection.

D. Fasteners: Use fastener sizes that penetrate substrate not less than recommended by fastener manufacturer to achieve maximum pull-out resistance.

E. Conceal fasteners and expansion provisions where possible in exposed work and locate to minimize possibility of leakage. Cover and seal fasteners and anchors as required for a tight installation.

F. Seal joints as required for watertight construction.

1. Use sealant-filled joints unless otherwise indicated. Embed hooked flanges of joint members not less than 1 inch into sealant. Form joints to completely conceal sealant. When ambient temperature at time of installation is between 40 and 70 deg F (4 and 21 deg C), set joint members for fifty percent (50%) movement each way. Adjust setting proportionately for installation at higher ambient temperatures. Do not install sealant-type joints at temperatures below 40 deg F (4 deg C).
2. Prepare joints and apply sealants to comply with requirements in Section 079200 "Joint Sealants."

G. Soldered Joints: Clean surfaces to be soldered, removing oils and foreign matter. Pre-tin edges of sheets with solder to width of 1½ inches; however, reduce pre-tinning where pre-tinned surface would show in completed Work.

1. Do not solder aluminum sheet.
2. Do not use torches for soldering.
3. Heat surfaces to receive solder, and flow solder into joint. Fill joint completely. Completely remove flux and spatter from exposed surfaces.
4. Copper Soldering: Tin edges of uncoated sheets, using solder for copper.

H. Rivets: Rivet joints in uncoated aluminum and zinc where indicated and where necessary for strength.

3.4 ROOF-DRAINAGE SYSTEM INSTALLATION

A. General: Install sheet metal roof-drainage items to produce complete roof-drainage system according to cited sheet metal standard unless otherwise indicated. Coordinate installation of roof perimeter flashing with installation of roof-drainage system.

B. Hanging Gutters: Join sections with joints sealed with sealant. Provide for thermal expansion. Attach gutters at eave or fascia to firmly anchor them in position. Provide end closures and seal watertight with sealant. Slope to downspouts.

1. Fasten gutter spacers to front and back of gutter.
2. Anchor and loosely lock back edge of gutter to continuous eave or apron flashing.
3. Anchor gutter with twisted straps spaced not more than 24 inches apart to roof deck, unless otherwise indicated, and loosely lock to front gutter bead.
4. Install gutter with expansion joints at locations not exceeding 50 feet apart. Install expansion-joint caps.

C. Downspouts: Join sections with 1½ inch telescoping joints.

1. Provide hangers with fasteners designed to hold downspouts securely to walls. Locate hangers at top and bottom and at approximately 60 inches o.c.
2. Provide elbows at base of exposed downspout onto concrete splash blocks to direct water away from building.
3. Connect concealed downspout/piping to underground drainage system.

D. Expansion-Joint Covers: Install expansion-joint covers at locations and of configuration indicated. Lap joints minimum of 4 inches in direction of water flow.

3.5 ROOF FLASHING INSTALLATION

A. General: Install sheet metal flashing and trim to comply with performance requirements and cited sheet metal standard. Provide concealed fasteners where possible, and set units true to line, levels, and slopes. Install work with laps, joints, and seams that are permanently watertight and weather resistant.

B. Drip Edge, Fascia, Cap and Other Exposed Flashings: Anchor to resist uplift and outward forces according to recommendations in cited sheet metal standard unless otherwise indicated. Interlock bottom edge of roof edge flashing with continuous cleat anchored to substrate at staggered 3-inch centers.

C. Copings: Anchor to resist uplift and outward forces according to recommendations in cited sheet metal standard unless otherwise indicated.

1. Interlock exterior bottom edge of coping with continuous cleat anchored to substrate at 24-inch centers.
2. Anchor interior leg of coping with washers and screw fasteners through slotted holes at 24-inch centers.

D. Pipe or Post Counterflashing: Install counterflashing umbrella with close-fitting collar with top edge flared for elastomeric sealant, extending minimum of 4 inches over base flashing. Install stainless-steel draw band and tighten.

E. Counterflashing: Coordinate installation of counterflashing with installation of base flashing. Insert counterflashing in reglets or receivers and fit tightly to base flashing. Extend counterflashing 4 inches over base flashing. Lap counterflashing joints minimum of 4 inches. Secure in waterproof manner by means of interlocking folded seam unless otherwise indicated.

F. Roof-Penetration Flashing: Coordinate installation of roof-penetration flashing with installation of roofing and other items penetrating roof. Seal with elastomeric sealant and clamp flashing to pipes that penetrate roof.

3.6 ERECTION TOLERANCES

A. Installation Tolerances: Shim and align sheet metal flashing and trim within installed tolerance of ¼ inch in 20 feet on slope and location lines indicated on Drawings and within 1/8-inch offset of adjoining faces and of alignment of matching profiles.

B. Installation Tolerances: Shim and align sheet metal flashing and trim within installed tolerances specified in MCA's "Guide Specification for Residential Metal Roofing."

3.7 CLEANING AND PROTECTION

A. Clean and neutralize flux materials. Clean off excess solder.

B. Clean off excess sealants.

C. Remove temporary protective coverings and strippable films as sheet metal flashing and trim are installed unless otherwise indicated in manufacturer's written installation instructions. On completion of sheet metal flashing and trim installation, remove unused materials and clean

finished surfaces as recommended by sheet metal flashing and trim manufacturer. Maintain sheet metal flashing and trim in clean condition during construction.

D. Replace sheet metal flashing and trim that have been damaged or that have deteriorated beyond successful repair by finish touchup or similar minor repair procedures.

END OF SECTION 076200

SECTION 077100 - ROOF SPECIALTIES

PART 1 - GENERAL

1.1 RELATED DOCUMENTS

A. Drawings and general provisions of the Contract, including General and Supplementary Conditions and Division 01 Specification Sections, apply to this Section.

1.2 SUMMARY

A. Section Includes:

1. Roof-edge specialties.

B. Related Sections:

1. Section 061000 "Rough Carpentry" for wood nailers, curbs, and blocking.
2. Section 076200 "Sheet Metal Flashing and Trim" for custom- and site-fabricated sheet metal flashing and trim.
3. Section 077200 "Roof Accessories" for equipment supports, roof hatches, vents, and other manufactured roof accessory units.
4. Section 079200 "Joint Sealants" for field-applied sealants between roof specialties and adjacent materials.
5. Section 079500 "Expansion Control" for manufactured sheet metal expansion-joint covers.

1.3 PERFORMANCE REQUIREMENTS

A. General Performance: Roof specialties shall withstand exposure to weather and resist thermally induced movement without failure, rattling, leaking, or fastener disengagement due to defective manufacture, fabrication, installation, or other defects in construction.

B. FM Approvals' Listing: Manufacture and install roof-edge flashings that are listed in FM Approvals' "RoofNav" and approved for windstorm classification, Class 1-120. Identify materials with FM Approvals' markings.

C. SPRI Wind Design Standard: Manufacture and install roof-edge flashings tested according to SPRI ES-1 in accordance with Section 1504.5 of the 2005 Connecticut State Building Code for edge securement.

D. Thermal Movements: Allow for thermal movements from ambient and surface temperature changes to prevent buckling, opening of joints, hole elongation, overstressing of components, failure of joint sealants, failure of connections, and other detrimental effects. Provide clips that resist rotation and avoid shear stress as a result of thermal movements. Base calculations on surface temperatures of materials due to both solar heat gain and nighttime-sky heat loss.

1. Temperature Change (Range): 120 deg F (67 deg C), ambient; 180 deg F (100 deg C), material surfaces.

1.4 ACTION SUBMITTALS

A. Product Data: For each type of product indicated. Include construction details, material descriptions, dimensions of individual components and profiles, and finishes.

B. Shop Drawings: For roof specialties. Include plans, elevations, expansion-joint locations, keyed details, and attachments to other work. Distinguish between plant- and field-assembled work. Include the following:

1. Details for expansion and contraction; locations of expansion joints, including direction of expansion and contraction.
2. Pattern of seams and layout of fasteners, cleats, clips, and other attachments.
3. Details of termination points and assemblies, including fixed points.
4. Details of special conditions.

C. Samples for Initial Selection: For each type of roof specialty indicated with factory-applied color finishes.

1.5 INFORMATIONAL SUBMITTALS

A. Product Test Reports: Based on evaluation of comprehensive tests performed by a qualified testing agency, for roof-edge flashings.

B. Warranty: Sample of special warranty.

1.6 CLOSEOUT SUBMITTALS

A. Maintenance Data: For roofing specialties to include in maintenance manuals.

1.7 DELIVERY, STORAGE, AND HANDLING

A. Do not store roof specialties in contact with other materials that might cause staining, denting, or other surface damage. Store roof specialties away from uncured concrete and masonry.

B. Protect strippable protective covering on roof specialties from exposure to sunlight and high humidity, except to extent necessary for the period of roof specialties installation.

1.8 WARRANTY

A. Special Warranty on Painted Finishes: Manufacturer's standard form in which manufacturer agrees to repair finish or replace roof specialties that show evidence of deterioration of factory-applied finishes within specified warranty period.

1. Fluoropolymer Finish: Deterioration includes, but is not limited to, the following:

a. Color fading more than 5 Hunter units when tested according to ASTM D 2244.
b. Chalking in excess of a No. 8 rating when tested according to ASTM D 4214.
c. Cracking, checking, peeling, or failure of paint to adhere to bare metal.

2. Finish Warranty Period: Twenty (20) years from date of Substantial Completion.

PART 2 - PRODUCTS

2.1 EXPOSED METALS

A. Aluminum Sheet: ASTM B 209, alloy as standard with manufacturer for finish required, with temper to suit forming operations and performance required.

1. Surface: Smooth, flat finish.
2. Exposed Coil-Coated Finishes: Prepare, pretreat, and apply coating to exposed metal surfaces to comply with coating and resin manufacturers' written instructions.

a. Two-Coat Fluoropolymer: AAMA 620. System consisting of primer and fluoropolymer color topcoat containing not less than seventy percent (70%) PVDF resin by weight.

1) Color: As selected by Architect and Owner from manufacturer's full range.

b. Concealed Surface: Pretreat with manufacturer's standard white or light-colored acrylic or polyester backer finish, consisting of prime coat and wash coat with a minimum total dry film thickness of 0.5 mil.

B. Aluminum Extrusions: ASTM B 221, alloy and temper recommended by manufacturer for type of use and finish indicated, finished as follows:

1. Exposed High-Performance Organic Finish: Prepare, pretreat, and apply coating to exposed metal surfaces to comply with coating and resin manufacturers' written instructions.

a. Two-Coat Fluoropolymer: AAMA 2605. System consisting of primer and fluoropolymer color topcoat containing not less than seventy percent (70%) PVDF resin by weight.

1) Color: As selected by Architect and Owner from manufacturer's full range.

2.2 CONCEALED METALS

A. Aluminum Sheet: ASTM B 209, alloy and temper recommended by manufacturer for type of use and structural performance indicated, mill finished.

B. Aluminum Extrusions: ASTM B 221, alloy and temper recommended by manufacturer for type of use and structural performance indicated, mill finished.

2.3 UNDERLAYMENT MATERIALS

A. Felt: ASTM D 226, Type II (No. 30), asphalt-saturated organic felt, nonperforated.

B. Slip Sheet: Building paper, 3-lb/100 sq. ft. minimum, rosin sized.

2.4 MISCELLANEOUS MATERIALS

A. General: Provide materials and types of fasteners, protective coatings, sealants, and other miscellaneous items required by manufacturer for a complete installation.

B. Fasteners: Manufacturer's recommended fasteners, suitable for application and designed to meet performance requirements. Furnish the following unless otherwise indicated:

1. Exposed Penetrating Fasteners: Gasketed screws with hex washer heads matching color of sheet metal.
2. Fasteners for Aluminum: Aluminum or Series 300 stainless steel.

C. Elastomeric Sealant: ASTM C 920, elastomeric polyurethane polymer sealant of type, grade, class, and use classifications required by roofing-specialty manufacturer for each application.

D. Bituminous Coating: Cold-applied asphalt emulsion complying with ASTM D 1187.

E. Asphalt Roofing Cement: ASTM D 4586, asbestos free, of consistency required for application.

2.5 ROOF-EDGE SPECIALTIES

A. Roof-Edge Fascia: Manufactured, two-piece, roof-edge fascia consisting of snap-on metal fascia cover in section lengths not exceeding 12 feet and a continuous formed- or extruded-aluminum anchor bar with integral drip-edge cleat to engage fascia cover. Provide matching corner units.

1. Basis-of-Design Product:

a. Firestone Building Products

2. Manufacturers: Subject to compliance with requirements, available manufacturers offering products that may be incorporated into the Work include, but are not limited to, the following:

a. Johns Manville
b. Perimeter Systems; a division of Southern Aluminum Finishing Company, Inc.
c. Substitutions: Under provisions of Section 012500 “Substitution Procedures”.

3. Fascia Cover: Fabricated from the following exposed metal:

a. Formed Aluminum: 0.050 inch thick.

4. Corners: Factory mitered and continuously welded.
5. Splice Plates: Concealed, of same material, finish, and shape as fascia cover.

2.6 GENERAL FINISH REQUIREMENTS

A. Comply with NAAMM's "Metal Finishes Manual for Architectural and Metal Products" for recommendations for applying and designating finishes.

B. Protect mechanical and painted finishes on exposed surfaces from damage by applying a strippable, temporary protective covering before shipping.

C. Appearance of Finished Work: Noticeable variations in same piece are not acceptable. Variations in appearance of adjoining components are acceptable if they are within the range of approved Samples and are assembled or installed to minimize contrast.

PART 3 - EXECUTION

3.1 EXAMINATION

A. Examine substrates, areas, and conditions, with Installer present, to verify actual locations, dimensions, and other conditions affecting performance of the Work.

B. Examine walls, roof edges, and parapets for suitable conditions for roof specialties.

C. Verify that substrate is sound, dry, smooth, clean, sloped for drainage, and securely anchored.

D. Proceed with installation only after unsatisfactory conditions have been corrected.

3.2 UNDERLAYMENT INSTALLATION

A. Felt Underlayment: Install with adhesive for temporary anchorage to minimize use of mechanical fasteners under roof specialties. Apply in shingle fashion to shed water, with lapped joints of not less than 2 inches.

B. Slip Sheet: Install with tape or adhesive for temporary anchorage to minimize use of mechanical fasteners under roof specialties. Apply in shingle fashion to shed water, with lapped joints of not less than 2 inches.

3.3 INSTALLATION, GENERAL

A. General: Install roof specialties according to manufacturer's written instructions. Anchor roof specialties securely in place, with provisions for thermal and structural movement. Use fasteners, protective coatings, separators, sealants, and other miscellaneous items as required to complete roof-specialty systems.

1. Install roof specialties level, plumb, true to line and elevation; with limited oil-canning and without warping, jogs in alignment, buckling, or tool marks.
2. Provide uniform, neat seams with minimum exposure of sealant.
3. Install roof specialties to fit substrates and to result in watertight performance. Verify shapes and dimensions of surfaces to be covered before manufacture.
4. Torch cutting of roof specialties is not permitted.
5. Do not use graphite pencils to mark metal surfaces.

B. Metal Protection: Protect metals against galvanic action by separating dissimilar metals from contact with each other or with corrosive substrates by painting contact surfaces with bituminous coating or by other permanent separation as recommended by manufacturer.

1. Coat concealed side of uncoated aluminum roof specialties with bituminous coating where in contact with wood, ferrous metal, or cementitious construction.
2. Underlayment: Where installing metal flashing directly on cementitious or wood substrates, install a course of felt underlayment and cover with a slip sheet.
3. Bed flanges in thick coat of asphalt roofing cement where required by manufacturers of roof specialties for waterproof performance.

C. Expansion Provisions: Allow for thermal expansion of exposed roof specialties.

1. Space movement joints at a maximum of 12 feet with no joints within 18 inches of corners or intersections unless otherwise shown on Drawings.
2. When ambient temperature at time of installation is between 40 and 70 deg F (4 and 21 deg C), set joint members for fifty percent (50%) movement each way. Adjust setting proportionately for installation at higher ambient temperatures.

D. Fastener Sizes: Use fasteners of sizes that will penetrate wood blocking or sheathing not less than 1¼ inches for nails and not less than ¾ inch for wood screws.

E. Seal joints with elastomeric sealant as required by roofing-specialty manufacturer.

F. Seal joints as required for watertight construction. Place sealant to be completely concealed in joint. Do not install sealants at temperatures below 40 deg F (4 deg C).

3.4 ROOF-EDGE FLASHING INSTALLATION

A. Install cleats, cants, and other anchoring and attachment accessories and devices with concealed fasteners.

B. Anchor roof edgings with manufacturer's required devices, fasteners, and fastener spacing to meet performance requirements.

3.5 CLEANING AND PROTECTION

A. Remove temporary protective coverings and strippable films as roof specialties are installed. On completion of installation, clean finished surfaces including removing unused fasteners, metal filings, pop rivet stems, and pieces of flashing. Maintain roof specialties in a clean condition during construction.

B. Replace roof specialties that have been damaged or that cannot be successfully repaired by finish touchup or similar minor repair procedures.

END OF SECTION 077100

SECTION 077200 - ROOF ACCESSORIES

PART 1 - GENERAL

1.1 RELATED DOCUMENTS

A. Drawings and general provisions of the Contract, including General and Supplementary Conditions and Division 01 Specification Sections, apply to this Section.

1.2 SUMMARY

A. Section Includes:

1. Pipe supports.
2. Preformed flashing sleeves.
3. Downspout accessories

B. Related Sections:

1. Section 055213 "Pipe and Tube Railings" for safety railing systems not attached to roof-hatch curbs.
2. Section 076200 "Sheet Metal Flashing and Trim" for shop- and field-formed metal flashing, roof-drainage systems, roof expansion-joint covers, and miscellaneous sheet metal trim and accessories.
3. Section 077100 "Roof Specialties" for manufactured fasciae.
4. Section 233423 "HVAC Power Ventilators" for power roof-mounted ventilators.

1.3 PERFORMANCE REQUIREMENTS

A. General Performance: Roof accessories shall withstand exposure to weather and resist thermally induced movement without failure, rattling, leaking, or fastener disengagement due to defective manufacture, fabrication, installation, or other defects in construction.

1.4 ACTION SUBMITTALS

A. Product Data: For each type of roof accessory indicated. Include construction details, material descriptions, dimensions of individual components and profiles, and finishes.

B. Shop Drawings: For roof accessories. Include plans, elevations, keyed details, and attachments to other work. Indicate dimensions, loadings, and special conditions. Distinguish between plant- and field-assembled work.

C. Samples: For each exposed product and for each color and texture specified, prepared on Samples of size to adequately show color.

1.5 INFORMATIONAL SUBMITTALS

A. Coordination Drawings: Roof plans, drawn to scale, and coordinating penetrations and roof-mounted items. Show the following:

1. Size and location of roof accessories specified in this Section.
2. Method of attaching roof accessories to roof or building structure.
3. Other roof-mounted items including mechanical and electrical equipment, ductwork, piping, and conduit.
4. Required clearances.

B. Warranty: Sample of special warranty.

1.6 CLOSEOUT SUBMITTALS

A. Operation and Maintenance Data: For roof accessories to include in operation and maintenance manuals.

1.7 COORDINATION

A. Coordinate layout and installation of roof accessories with roofing membrane and base flashing and interfacing and adjoining construction to provide a leakproof, weathertight, secure, and noncorrosive installation.

B. Coordinate dimensions with rough-in information or Shop Drawings of equipment to be supported.

1.8 WARRANTY

A. Special Warranty on Painted Finishes: Manufacturer's standard form in which manufacturer agrees to repair finishes or replace roof accessories that show evidence of deterioration of factory-applied finishes within specified warranty period.

1. Fluoropolymer Finish: Deterioration includes, but is not limited to, the following:

a. Color fading more than 5 Hunter units when tested according to ASTM D 2244.
b. Chalking in excess of a No. 8 rating when tested according to ASTM D 4214.
c. Cracking, checking, peeling, or failure of paint to adhere to bare metal.

2. Finish Warranty Period: Twenty (20) years from date of Substantial Completion.

PART 2 - PRODUCTS

2.1 METAL MATERIALS

A. Aluminum Sheet: ASTM B 209, manufacturer's standard alloy for finish required, with temper to suit forming operations and performance required.

1. Exposed Coil-Coated Finish: Prepare, pretreat, and apply coating to exposed metal surfaces to comply with coating and resin manufacturers' written instructions.

a. Two-Coat Fluoropolymer Finish: AAMA 620. System consisting of primer and fluoropolymer color topcoat containing not less than seventy percent (70%) PVDF resin by weight.

2. Concealed Finish: Pretreat with manufacturer's standard white or light-colored acrylic or polyester-backer finish consisting of prime coat and wash coat, with a minimum total dry film thickness of 0.5 mil.

2.2 MISCELLANEOUS MATERIALS

A. General: Provide materials and types of fasteners, protective coatings, sealants, and other miscellaneous items required by manufacturer for a complete installation.

B. Glass-Fiber Board Insulation: ASTM C 726, thickness as indicated.

C. Wood Nailers: Softwood lumber, pressure treated with waterborne preservatives for aboveground use, acceptable to authorities having jurisdiction, containing no arsenic or chromium, and complying with AWPA C2; not less than 1½ inches thick.

D. Bituminous Coating: Cold-applied asphalt emulsion complying with ASTM D 1187.

E. Underlayment:

1. Felt: ASTM D 226, Type II (No. 30), asphalt-saturated organic felt, nonperforated.
2. Polyethylene Sheet: 6-mil-thick polyethylene sheet complying with ASTM D 4397.
3. Slip Sheet: Building paper, 3-lb/100 sq. ft. minimum, rosin sized.

F. Fasteners: Roof accessory manufacturer's recommended fasteners suitable for application and metals being fastened. Match finish of exposed fasteners with finish of material being fastened. Provide nonremovable fastener heads to exterior exposed fasteners. Furnish the following unless otherwise indicated:

1. Fasteners for Aluminum Sheet: Aluminum or Series 300 stainless steel.

G. Gaskets: Manufacturer's standard tubular or fingered design of neoprene, EPDM, PVC, or silicone or a flat design of foam rubber, sponge neoprene, or cork.

H. Elastomeric Sealant: ASTM C 920, elastomeric polymer sealant as recommended by roof accessory manufacturer for installation indicated; low modulus; of type, grade, class, and use classifications required to seal joints and remain watertight.

I. Asphalt Roofing Cement: ASTM D 4586, asbestos free, of consistency required for application.

2.3 PIPE SUPPORTS

A. Rubber Pipe Support Curbs: Provide manufacturer's standard low profile rubber pipe support curbs.

1. Basis-of-Design Product:

a. Advanced Support Products **EcoCurb REC 9S**
b. Substitutions: Under provisions of Section 012500 “Substitution Procedures”.

2.4 PREFORMED FLASHING SLEEVES

A. Exhaust Vent Flashing: Double-walled metal flashing sleeve or boot, insulation filled, with integral deck flange, 12 inches high, with removable metal hood and slotted metal collar.

1. Manufacturers: Subject to compliance with requirements, available manufacturers offering products that may be incorporated into the Work include, but are not limited to, the following:

   a. Custom Solution Roof and Metal Products
   b. Thaler Metal USA Inc
   c. Substitutions: Under provisions of Section 012500 “Substitution Procedures”.

2. Metal: Aluminum sheet, 0.063 inch thick.
3. Diameter: As required.
4. Finish: Manufacturer's standard.

B. Vent Stack Flashing: Metal flashing sleeve, uninsulated, with integral deck flange.

1. Manufacturers: Subject to compliance with requirements, available manufacturers offering products that may be incorporated into the Work include, but are not limited to, the following:

   a. Custom Solution Roof and Metal Products
   b. Milcor Inc.; Commercial Products Group of Hart & Cooley, Inc.
   c. Thaler Metal USA Inc.
   d. Substitutions: Under provisions of Section 012500 “Substitution Procedures”.

2. Metal: Aluminum sheet, 0.063 inch thick.
3. Height: 19 inches.
4. Diameter: As required.
5. Finish: Manufacturer's standard.

2.5 DOWNSPOUT ACCESSORIES

A. Concrete Splash Blocks: 2 feet long x 1 foot wide flared concrete splash block pitched to drain away from the building, with side walls and textured finish.

B. Downspout Boots: Of material and profile to align with and connect to storm water pipe riser.

2.6 GENERAL FINISH REQUIREMENTS

A. Comply with NAAMM's "Metal Finishes Manual for Architectural and Metal Products" for recommendations for applying and designating finishes.

B. Appearance of Finished Work: Noticeable variations in same piece are not acceptable. Variations in appearance of adjoining components are acceptable if they are within the range of approved Samples and are assembled or installed to minimize contrast.

PART 3 - EXECUTION

3.1 EXAMINATION

A. Examine substrates, areas, and conditions, with Installer present, to verify actual locations, dimensions, and other conditions affecting performance of the Work.

B. Verify that substrate is sound, dry, smooth, clean, sloped for drainage, and securely anchored.

C. Verify dimensions of roof openings for roof accessories.

D. Proceed with installation only after unsatisfactory conditions have been corrected.

3.2 INSTALLATION

A. General: Install roof accessories according to manufacturer's written instructions.

1. Install roof accessories level, plumb, true to line and elevation, and without warping, jogs in alignment, excessive oil canning, buckling, or tool marks.
2. Anchor roof accessories securely in place so they are capable of resisting indicated loads.
3. Use fasteners, separators, sealants, and other miscellaneous items as required to complete installation of roof accessories and fit them to substrates.
4. Install roof accessories to resist exposure to weather without failing, rattling, leaking, or loosening of fasteners and seals.

B. Metal Protection: Protect metals against galvanic action by separating dissimilar metals from contact with each other or with corrosive substrates by painting contact surfaces with bituminous coating or by other permanent separation as recommended by manufacturer.

1. Coat concealed side of uncoated aluminum roof accessories with bituminous coating where in contact with wood, ferrous metal, or cementitious construction.
2. Underlayment: Where installing roof accessories directly on cementitious or wood substrates, install a course of felt underlayment and cover with a slip sheet, or install a course of polyethylene sheet.
3. Bed flanges in thick coat of asphalt roofing cement where required by manufacturers of roof accessories for waterproof performance.

C. Preformed Flashing-Sleeve Installation: Secure flashing sleeve to roof membrane according to flashing-sleeve manufacturer's written instructions.

D. Seal joints with elastomeric or butyl sealant as required by roof accessory manufacturer.

3.3 REPAIR AND CLEANING

A. Clean exposed surfaces according to manufacturer's written instructions.

B. Clean off excess sealants.

C. Replace roof accessories that have been damaged or that cannot be successfully repaired by finish touchup or similar minor repair procedures.

END OF SECTION 077200

SECTION 078100 - APPLIED FIREPROOFING

PART 1 - GENERAL

1.1 RELATED DOCUMENTS

A. Drawings and general provisions of the Contract, including General and Supplementary Conditions and Division 01 Specification Sections, apply to this Section.

1.2 SUMMARY

A. Section includes sprayed fire-resistive materials (SFRM).

1.3 PERFORMANCE REQUIREMENTS

A. Fireproofing Materials: ASTM E 119 and ASTM E 814 to achieve a fire rating as noted on Drawings.

1.4 ACTION SUBMITTALS

A. Product Data: For each type of product.

B. Shop Drawings: Framing plans, schedules, or both, indicating the following:

1. Extent of fireproofing for each construction and fire-resistance rating.
2. Applicable fire-resistance design designations of a qualified testing and inspecting agency acceptable to authorities having jurisdiction.
3. Minimum fireproofing thicknesses needed to achieve required fire-resistance rating of each structural component and assembly.
4. Treatment of fireproofing after application.

C. Samples: For each exposed product and for each color and texture specified, 4 inches square in size.

1.5 INFORMATIONAL SUBMITTALS

A. Qualification Data: For Installer.

B. Product Certificates: For each type of fireproofing.

C. Evaluation Reports: For fireproofing, from ICC-ES.

D. Preconstruction Test Reports: For fireproofing.

E. Field quality-control reports.

1.6 QUALITY ASSURANCE

A. Installer Qualifications: A firm or individual certified, licensed, or otherwise qualified by fireproofing manufacturer as experienced and with sufficient trained staff to install manufacturer's products according to specified requirements.

B. Mockups: Build mockups to set quality standards for materials and execution.

1. Build mockup of each type of fireproofing and each required finish as shown on Drawings.
2. Approval of mockups does not constitute approval of deviations from the Contract Documents contained in mockups unless Architect specifically approves such deviations in writing.

1.7 FIELD CONDITIONS

A. Environmental Limitations: Do not apply fireproofing when ambient or substrate temperature is 44 deg F (7 deg C) or lower unless temporary protection and heat are provided to maintain temperature at or above this level for twenty-four (24) hours before, during, and for twenty-four (24) hours after product application.

B. Ventilation: Ventilate building spaces during and after application of fireproofing, providing complete air exchanges according to manufacturer's written instructions. Use natural means or, if they are inadequate, forced-air circulation until fireproofing dries thoroughly.

PART 2 - PRODUCTS

2.1 MATERIALS, GENERAL

A. Assemblies: Provide fireproofing, including auxiliary materials, according to requirements of each fire-resistance design and manufacturer's written instructions.

B. Source Limitations: Obtain fireproofing for each fire-resistance design from single source.

C. Fire-Resistance Design: Indicated on Drawings, tested according to ASTM E 119 by a qualified testing agency. Identify products with appropriate markings of applicable testing agency.

1. Steel members are to be considered unrestrained unless specifically noted otherwise.

D. Asbestos: Provide products containing no detectable asbestos.

2.2 SPRAYED FIRE-RESISTIVE MATERIALS

A. SFRM: Manufacturer's standard, factory-mixed, lightweight, dry formulation, complying with indicated fire-resistance design, and mixed with water at Project site to form a slurry or mortar before conveyance and application.

1. Products: Subject to compliance with requirements, available products that may be incorporated into the Work include, but are not limited to, the following:

a. Carboline Company, subsidiary of RPM International, Fireproofing Products Div.
b. Grace, W. R. & Co. - Conn.; Grace Construction Products
c. Southwest Fireproofing Products Co.
d. Substitutions: Under provisions of Section 012500 “Substitution Procedures”.

2. Bond Strength: Minimum 150-lbf/sq. ft. cohesive and adhesive strength based on field testing according to ASTM E 736.
3. Density: Not less than 15 lb/cu. ft. and as specified in the approved fire-resistance design, according to ASTM E 605.
4. Thickness: As required for fire-resistance design indicated, measured according to requirements of fire-resistance design or ASTM E 605, whichever is thicker, but not less than 0.375 inch.
5. Combustion Characteristics: ASTM E 136.
6. Surface-Burning Characteristics: Comply with ASTM E 84; testing by a qualified testing agency. Identify products with appropriate markings of applicable testing agency.

   a. Flame-Spread Index: 10 or less.
   b. Smoke-Developed Index: 10 or less.

7. Corrosion Resistance: No evidence of corrosion according to ASTM E 937.
8. Deflection: No cracking, spalling, or delamination according to ASTM E 759.
9. Effect of Impact on Bonding: No cracking, spalling, or delamination according to ASTM E 760.
10. Air Erosion: Maximum weight loss of 0.025 g/sq. ft. in twenty-four (24) hours according to ASTM E 859.
11. Finish: As selected by Architect from manufacturer's standard finishes.

2.3 AUXILIARY MATERIALS

A. General: Provide auxiliary materials that are compatible with fireproofing and substrates and are approved by UL or another testing and inspecting agency acceptable to authorities having jurisdiction for use in fire-resistance designs indicated.

B. Substrate Primers: Primers approved by fireproofing manufacturer and complying with one (1) or both of the following requirements:

1. Primer and substrate are identical to those tested in required fire-resistance design by UL or another testing and inspecting agency acceptable to authorities having jurisdiction.
2. Primer's bond strength in required fire-resistance design complies with specified bond strength for fireproofing and with requirements in UL's "Fire Resistance Directory" or in the listings of another qualified testing agency acceptable to authorities having jurisdiction, based on a series of bond tests according to ASTM E 736.

C. Bonding Agent: Product approved by fireproofing manufacturer and complying with requirements in UL's "Fire Resistance Directory" or in the listings of another qualified testing agency acceptable to authorities having jurisdiction.

D. Reinforcing Fabric: Glass- or carbon-fiber fabric of type, weight, and form required to comply with fire-resistance designs indicated; approved and provided by fireproofing manufacturer.

E. Reinforcing Mesh: Metallic mesh reinforcement of type, weight, and form required to comply with fire-resistance design indicated; approved and provided by fireproofing manufacturer. Include pins and attachment.

PART 3 - EXECUTION

3.1 EXAMINATION

A. Examine substrates, areas, and conditions, with Installer present, for compliance with requirements for substrates and other conditions affecting performance of the Work and according to each fire-resistance design. Verify compliance with the following:

1. Substrates are free of dirt, oil, grease, release agents, rolling compounds, mill scale, loose scale, incompatible primers, paints, and encapsulants, or other foreign substances capable of impairing bond of fireproofing with substrates under conditions of normal use or fire exposure.
2. Objects penetrating fireproofing, including clips, hangers, support sleeves, and similar items, are securely attached to substrates.
3. Substrates receiving fireproofing are not obstructed by ducts, piping, equipment, or other suspended construction that will interfere with fireproofing application.

B. Verify that concrete work on steel deck has been completed before beginning fireproofing work.

C. Verify that roof construction, installation of roof-top HVAC equipment, and other related work is complete before beginning fireproofing work.

D. Conduct tests according to fireproofing manufacturer's written recommendations to verify that substrates are free of substances capable of interfering with bond.

E. Prepare written report, endorsed by Installer, listing conditions detrimental to performance of the Work.

F. Proceed with installation only after unsatisfactory conditions have been corrected.

3.2 PREPARATION

A. Cover other work subject to damage from fallout or overspray of fireproofing materials during application.

B. Clean substrates of substances that could impair bond of fireproofing.

C. Prime substrates where included in fire-resistance design and where recommended in writing by fireproofing manufacturer unless compatible shop primer has been applied and is in satisfactory condition to receive fireproofing.

D. For applications visible on completion of Project, repair substrates to remove surface imperfections that could affect uniformity of texture and thickness in finished surface of fireproofing. Remove minor projections and fill voids that would telegraph through fire-resistive products after application.

3.3 APPLICATION

A. Construct fireproofing assemblies that are identical to fire-resistance design indicated and products as specified, tested, and substantiated by test reports; for thickness, primers, sealers, topcoats, finishing, and other materials and procedures affecting fireproofing work.

B. Comply with fireproofing manufacturer's written instructions for mixing materials, application procedures, and types of equipment used to mix, convey, and apply fireproofing; as applicable to particular conditions of installation and as required to achieve fire-resistance ratings indicated.

C. Coordinate application of fireproofing with other construction to minimize need to cut or remove fireproofing.

1. Do not begin applying fireproofing until clips, hangers, supports, sleeves, and other items penetrating fireproofing are in place.
2. Defer installing ducts, piping, and other items that would interfere with applying fireproofing until application of fireproofing is completed.

D. Metal Decks:

1. Do not apply fireproofing to underside of metal deck substrates until concrete topping, if any, has been completed.
2. Do not apply fireproofing to underside of metal roof deck until roofing has been completed; prohibit roof traffic during application and drying of fireproofing.

E. Install auxiliary materials as required, as detailed, and according to fire-resistance design and fireproofing manufacturer's written recommendations for conditions of exposure and intended use. For auxiliary materials, use attachment and anchorage devices of type recommended in writing by fireproofing manufacturer.

F. Spray apply fireproofing to maximum extent possible. Following the spraying operation in each area, complete the coverage by trowel application or other placement method recommended in writing by fireproofing manufacturer.

G. Extend fireproofing in full thickness over entire area of each substrate to be protected.

H. Install body of fireproofing in a single course unless otherwise recommended in writing by fireproofing manufacturer.

I. Provide a uniform finish complying with description indicated for each type of fireproofing material and matching finish approved for required mockups.

J. Cure fireproofing according to fireproofing manufacturer's written recommendations.

K. Do not install enclosing or concealing construction until after fireproofing has been applied, inspected, and tested and corrections have been made to deficient applications.

L. Finishes: Where indicated, apply fireproofing to produce the following finishes:

1. Manufacturer's Standard Finishes: Finish according to manufacturer's written instructions for each finish selected.

3.4 FIELD QUALITY CONTROL

A. Special Inspections: Engage a qualified special inspector to perform the following special inspections:

1. Test and inspect as required by the IBC, 1704.10.

B. Perform the tests and inspections of completed Work in successive stages. Do not proceed with application of fireproofing for the next area until test results for previously completed applications of fireproofing show compliance with requirements. Tested values must equal or exceed values as specified and as indicated and required for approved fire-resistance design.

C. Fireproofing will be considered defective if it does not pass tests and inspections.

1. Remove and replace fireproofing that does not pass tests and inspections, and retest.
2. Apply additional fireproofing, per manufacturer's written instructions, where test results indicate insufficient thickness, and retest.

D. Prepare test and inspection reports.

3.5 CLEANING, PROTECTING, AND REPAIRING

A. Cleaning: Immediately after completing spraying operations in each containable area of Project, remove material overspray and fallout from surfaces of other construction and clean exposed surfaces to remove evidence of soiling.

B. Protect fireproofing, according to advice of manufacturer and Installer, from damage resulting from construction operations or other causes, so fireproofing will be without damage or deterioration at time of Substantial Completion.

C. As installation of other construction proceeds, inspect fireproofing and repair damaged areas and fireproofing removed due to work of other trades.

D. Repair fireproofing damaged by other work before concealing it with other construction.

E. Repair fireproofing by reapplying it using same method as original installation or using manufacturer's recommended trowel-applied product.

END OF SECTION 078100

SECTION 078413 - PENETRATION FIRESTOPPING

PART 1 - GENERAL

1.1 RELATED DOCUMENTS

A. Drawings and general provisions of the Contract, including General and Supplementary Conditions and Division 01 Specification Sections, apply to this Section.

1.2 SUMMARY

A. Section Includes:

1. Firestopping materials and accessories.

1.3 PERFORMANCE REQUIREMENTS

A. Provide and install complete penetration firestopping systems that have been tested and approved by nationally accepted testing agencies per ASTM E 814, UL 1479 or ASTM E 119 fire tests in a configuration that is representative of field conditions.

B. Surface Burning: ASTM E 84 with a flame spread/fuel contributed/smoke developed rating of 5/0/0.

1.4 SUBMITTALS

A. Product Data: For each type of product indicated provide characteristics, performance and limitation criteria.

B. Manufacturer's Installation Instructions: Indicate preparation and installation instructions.

C. Manufacturer's Certificate: Certify that products meet or exceed specified requirements.

1.5 QUALIFICATIONS

A. Manufacturer: Company specializing in manufacturing the products specified in this Section with minimum three (3) years documented experience.

B. Applicator: Company specializing in performing the work of this Section with minimum five (5) years documented experience.

1.6 REGULATORY REQUIREMENTS

A. Conform to applicable State Building code for fire resistance ratings and surface burning characteristics.

B. UL Classifications for these systems shall be (all two (2) hours or more):

1. Duct Penetrations: C-AJ-7027
2. Pipe Penetrations: C-AJ-1079

3. Cable Penetrations: C-AJ-1079
4. Conduit Penetrations: C-AJ-1079

1.7 MOCK-UP

A. Provide mock-up of applied firestopping material.

B. Apply 1 lineal ft to a representative substrate surface.

C. If accepted, mock-up will demonstrate minimum standard for the Work.

1.8 ENVIRONMENTAL REQUIREMENTS

A. Do not apply materials when temperature of substrate material and ambient air is below 60 degrees F.

B. Maintain this minimum temperature before, during and for three (3) days after installation of materials.

C. Provide ventilation in areas to receive solvent cured materials.

1.9 SEQUENCING

A. Sequence Work to permit firestopping materials to be installed after adjacent and surrounding work is complete.

PART 2 - PRODUCTS

2.1 MANUFACTURERS

A. Thermal Ceramics; **Firemaster Putty, Bulk and Blankets**

B. Tremco Incorporated; **Fyre-shield and Cerablanket FS Hilti, Inc.**

C. United States Gypsum; **Thermafiber Safing Insulation and FIRECODE compound**

D. Substitutions: Under provisions of Section 012500 “Substitution Procedures”.

2.2 MATERIALS

A. Firestopping Material: Single component silicone elastomeric compounds; conforming to the following:

1. Elongation & Shrinkage: Five percent (5%).
2. Tensile Strength: 300 psi.
3. Density: 8 lb/cu ft.
4. Surface Durability: 35 (Shore Hardness).
5. Durability and Longevity: Permanent.
6. Side Effects during Installation: Non-toxic.
7. Long Term Side Effects: None.

B. Primer: Type recommended by firestopping manufacturer for specific substrate surfaces.

C. Firesafing Blankets: ASTM C 665; 4 psf nominal density firesafing insulation.

D. Putty Pads: UL CLIV; acoustic, intumescent pad; 3.2mm thickness.

2.3 ACCESSORIES

A. Dam Material: Mineral fiber matting, permanent.

B. Retainers: Stainless clips to support mineral fiber matting

2.4 FINISHES

A. Color: Dark gray or manufacturer’s standard color.

PART 3 - EXECUTION

3.1 EXAMINATION

A. Examine substrates and conditions, with Installer present, for compliance with requirements for opening configurations, penetrating items, substrates, and other conditions affecting performance of the Work.

B. Proceed with installation only after unsatisfactory conditions have been corrected.

3.2 PREPARATION

A. Surface Cleaning: Clean out openings immediately before installing penetration firestopping to comply with manufacturer's written instructions and with the following requirements:

1. Remove from surfaces of opening substrates and from penetrating items foreign materials that could interfere with adhesion of penetration firestopping.
2. Clean opening substrates and penetrating items to produce clean, sound surfaces capable of developing optimum bond with penetration firestopping. Remove loose particles remaining from cleaning operation.
3. Remove laitance and form-release agents from concrete.

B. Install backing materials to arrest liquid material leakage.

3.3 INSTALLATION

A. General: Install penetration firestopping to comply with manufacturer's written installation instructions and published drawings for products and applications indicated.

B. Apply firestopping material to all wall and floor penetrations through rated assemblies. These penetrations include electrical conduit and raceways, plumbing and heating system penetrations, ducts and other system chases.

C. Apply primer and materials in accordance with manufacturer's instructions.

D. Apply firestopping material in sufficient thickness to achieve rating to a density of fifty percent (50%) to uniform density and texture.

E. Install material at walls or partition openings which contain penetrating sleeves, piping, ductwork, conduit and other items requiring firestopping.

F. Remove dam material after firestopping material has cured.

3.4 CLEANING AND PROTECTION

A. Clean off excess materials adjacent to openings as the Work progresses by methods and with cleaning materials that are approved in writing by penetration firestopping manufacturers and that do not damage materials in which openings occur.

B. Provide final protection and maintain conditions during and after installation that ensure that penetration firestopping is without damage or deterioration at time of Substantial Completion. If, despite such protection, damage or deterioration occurs, immediately cut out and remove damaged or deteriorated penetration firestopping and install new materials to produce systems complying with specified requirements.

3.5 SCHEDULE

A. See Construction Documents for rating information and construction details and conditions.

B. Firesafe all penetrations through new and existing masonry and gypsum board construction in the project work areas, equal to the one (1) or two (2) hour rating of the appropriate spaces.

END OF SECTION 078413

SECTION 079200 - JOINT SEALANTS

PART 1 - GENERAL

1.1 RELATED DOCUMENTS

A. Drawings and general provisions of the Contract, including General and Supplementary Conditions and Division 01 Specification Sections, apply to this Section.

1.2 SUMMARY

A. Section Includes:

1. Silicone joint sealants.
2. Urethane joint sealants.
3. Polysulfide joint sealants.
4. Latex joint sealants.
5. Solvent-release-curing joint sealants.
6. Preformed joint sealants.
7. Acoustical joint sealants.

B. Related Sections:

1. Section 042000 "Unit Masonry" for masonry control and expansion joint fillers and gaskets.
2. Section 079500 "Expansion Control" for building expansion joints.
3. Section 088000 "Glazing" for glazing sealants.
4. Section 092900 "Gypsum Board" for sealing perimeter joints.
5. Section 093000 "Tiling" for sealing tile joints.
6. Section 095113 "Acoustical Panel Ceilings" for sealing edge moldings at perimeters with acoustical sealant.

1.3 ACTION SUBMITTALS

A. Product Data: For each joint-sealant product indicated.

B. HPBS Submittals:

1. Product Data for Section 16a-38k-5(d): For sealants and sealant primers used inside the weatherproofing system, documentation including printed statement of VOC content.

C. Samples: Manufacturer's color charts consisting of strips of cured sealants showing the full range of colors available for each product exposed to view.

D. Joint-Sealant Schedule: Include the following information:

1. Joint-sealant application, joint location, and designation.
2. Joint-sealant manufacturer and product name.
3. Joint-sealant formulation.
4. Joint-sealant color.

1.4 INFORMATIONAL SUBMITTALS

A. Qualification Data: For qualified Installer.

B. Product Certificates: For each kind of joint sealant and accessory, from manufacturer.

C. Product Test Reports: Based on evaluation of comprehensive tests performed by a qualified testing agency, indicating that sealants comply with requirements.

D. Warranties: Sample of special warranties.

1.5 QUALITY ASSURANCE

A. Installer Qualifications: Manufacturer's authorized representative who is trained and approved for installation of units required for this Project.

B. Source Limitations: Obtain each kind of joint sealant from single source from single manufacturer.

C. Product Testing: Test joint sealants using a qualified testing agency.

1. Testing Agency Qualifications: An independent testing agency qualified according to ASTM C 1021 to conduct the testing indicated.

1.6 PROJECT CONDITIONS

A. Do not proceed with installation of joint sealants under the following conditions:

1. When ambient and substrate temperature conditions are outside limits permitted by joint-sealant manufacturer or are below 40 deg F (5 deg C).
2. When joint substrates are wet.
3. Where joint widths are less than those allowed by joint-sealant manufacturer for applications indicated.
4. Where contaminants capable of interfering with adhesion have not yet been removed from joint substrates.

1.7 WARRANTY

A. Special Installer's Warranty: Manufacturer's standard form in which Installer agrees to repair or replace joint sealants that do not comply with performance and other requirements specified in this Section within specified warranty period.

1. Warranty Period: Two (2) years from date of Substantial Completion.

B. Special warranties specified in this article exclude deterioration or failure of joint sealants from the following:

1. Movement of the structure caused by structural settlement or errors attributable to design or construction resulting in stresses on the sealant exceeding sealant manufacturer's written specifications for sealant elongation and compression.
2. Disintegration of joint substrates from natural causes exceeding design specifications.
3. Mechanical damage caused by individuals, tools, or other outside agents.

4. Changes in sealant appearance caused by accumulation of dirt or other atmospheric contaminants.

PART 2 - PRODUCTS

2.1 MATERIALS, GENERAL

A. Compatibility: Provide joint sealants, backings, and other related materials that are compatible with one another and with joint substrates under conditions of service and application, as demonstrated by joint-sealant manufacturer, based on testing and field experience.

B. VOC Content of Interior Sealants: Sealants and sealant primers used inside the weatherproofing system shall comply with the following limits for VOC content when calculated according to 40 CFR 59, Subpart D (EPA Method 24):

1. Architectural Sealants: 250 g/L.
2. Sealant Primers for Nonporous Substrates: 250 g/L.
3. Sealant Primers for Porous Substrates: 775 g/L.

C. Liquid-Applied Joint Sealants: Comply with ASTM C 920 and other requirements indicated for each liquid-applied joint sealant specified, including those referencing ASTM C 920 classifications for type, grade, class, and uses related to exposure and joint substrates.

D. Stain-Test-Response Characteristics: Where sealants are specified to be nonstaining to porous substrates, provide products that have undergone testing according to ASTM C 1248 and have not stained porous joint substrates indicated for Project.

E. Suitability for Contact with Food: Where sealants are indicated for joints that will come in repeated contact with food, provide products that comply with 21 CFR 177.2600.

F. Colors of Exposed Joint Sealants: As selected by Architect and Owner from manufacturer's full range.

2.2 SILICONE JOINT SEALANTS

A. Mildew-Resistant, Single-Component, Nonsag, Neutral-Curing Silicone Joint Sealant: ASTM C 920, Type S, Grade NS, Class 25, for Use NT.

1. Products: Subject to compliance with requirements, available products that may be incorporated into the Work include, but are not limited to, the following:

a. Pecora Corporation; **898**
b. Substitutions: Under provisions of Section 012500 “Substitution Procedures”.

2.3 POLYSULFIDE JOINT SEALANTS

A. Multicomponent, Nonsag, Polysulfide Joint Sealant: ASTM C 920, Type M, Grade NS, Class 25, for Use NT.

1. Products: Subject to compliance with requirements, available products that may be incorporated into the Work include, but are not limited to, the following:

a. BASF Building Systems; **Sonolastic Polysulfide Sealant**
b. Pecora Corporation; **Synthacalk GC-2+**
c. W. R. Meadows, Inc.; **Deck-O-Seal Gun Grade**
d. Substitutions: Under provisions of Section 012500 “Substitution Procedures”.

2.4 LATEX JOINT SEALANTS

A. Latex Joint Sealant: Acrylic latex or siliconized acrylic latex, ASTM C 834, Type OP, Grade NF.

1. Products: Subject to compliance with requirements, available products that may be incorporated into the Work include, but are not limited to, the following:

a. BASF Building Systems; **Sonolac**
b. Bostik, Inc.; **Chem-Calk 600**
c. Pecora Corporation; **AC-20+**
d. Tremco Incorporated; **Tremflex 834**
e. Substitutions: Under provisions of Section 012500 “Substitution Procedures”.

2.5 ACOUSTICAL JOINT SEALANTS

A. Acoustical Joint Sealant: Manufacturer's standard nonsag, paintable, nonstaining latex sealant complying with ASTM C 834. Product effectively reduces airborne sound transmission through perimeter joints and openings in building construction as demonstrated by testing representative assemblies according to ASTM E 90.

1. Products: Subject to compliance with requirements, available products that may be incorporated into the Work include, but are not limited to, the following:

a. Pecora Corporation; **AC-20 FTR**
b. USG Corporation; **SHEETROCK Acoustical Sealant**
c. Substitutions: Under provisions of Section 012500 “Substitution Procedures”.

2.6 JOINT SEALANT BACKING

A. General: Provide sealant backings of material that are nonstaining; are compatible with joint substrates, sealants, primers, and other joint fillers; and are approved for applications indicated by sealant manufacturer based on field experience and laboratory testing.

B. Cylindrical Sealant Backings: ASTM C 1330, Type B (bicellular material with a surface skin), and of size and density to control sealant depth and otherwise contribute to producing optimum sealant performance.

C. Bond-Breaker Tape: Polyethylene tape or other plastic tape recommended by sealant manufacturer for preventing sealant from adhering to rigid, inflexible joint-filler materials or joint surfaces at back of joint. Provide self-adhesive tape where applicable.

2.7 MISCELLANEOUS MATERIALS

A. Primer: Material recommended by joint-sealant manufacturer where required for adhesion of sealant to joint substrates indicated, as determined from preconstruction joint-sealant-substrate tests and field tests.

B. Cleaners for Nonporous Surfaces: Chemical cleaners acceptable to manufacturers of sealants and sealant backing materials, free of oily residues or other substances capable of staining or harming joint substrates and adjacent nonporous surfaces in any way, and formulated to promote optimum adhesion of sealants to joint substrates.

C. Masking Tape: Nonstaining, nonabsorbent material compatible with joint sealants and surfaces adjacent to joints.

PART 3 - EXECUTION

3.1 EXAMINATION

A. Examine joints indicated to receive joint sealants, with Installer present, for compliance with requirements for joint configuration, installation tolerances, and other conditions affecting joint-sealant performance.

B. Proceed with installation only after unsatisfactory conditions have been corrected.

3.2 PREPARATION

A. Surface Cleaning of Joints: Clean out joints immediately before installing joint sealants to comply with joint-sealant manufacturer's written instructions and the following requirements:

1. Remove all foreign material from joint substrates that could interfere with adhesion of joint sealant, including dust, paints (except for permanent, protective coatings tested and approved for sealant adhesion and compatibility by sealant manufacturer), old joint sealants, oil, grease, waterproofing, water repellents, water, surface dirt, and frost.
2. Clean porous joint substrate surfaces by brushing, grinding, mechanical abrading, or a combination of these methods to produce a clean, sound substrate capable of developing optimum bond with joint sealants. Remove loose particles remaining after cleaning operations above by vacuuming or blowing out joints with oil-free compressed air. Porous joint substrates include the following:

    a. Concrete.
    b. Masonry.

3. Remove laitance and form-release agents from concrete.
4. Clean nonporous joint substrate surfaces with chemical cleaners or other means that do not stain, harm substrates, or leave residues capable of interfering with adhesion of joint sealants. Nonporous joint substrates include the following:

    a. Metal.
    b. Glass.
    c. Porcelain enamel.

d. Glazed surfaces of ceramic tile.

B. Joint Priming: Prime joint substrates where recommended by joint-sealant manufacturer or prior experience. Apply primer to comply with joint-sealant manufacturer's written instructions. Confine primers to areas of joint-sealant bond; do not allow spillage or migration onto adjoining surfaces.

C. Masking Tape: Use masking tape where required to prevent contact of sealant or primer with adjoining surfaces that otherwise would be permanently stained or damaged by such contact or by cleaning methods required to remove sealant smears. Remove tape immediately after tooling without disturbing joint seal.

3.3 INSTALLATION OF JOINT SEALANTS

A. General: Comply with joint-sealant manufacturer's written installation instructions for products and applications indicated, unless more stringent requirements apply.

B. Sealant Installation Standard: Comply with recommendations in ASTM C 1193 for use of joint sealants as applicable to materials, applications, and conditions indicated.

C. Install sealant backings of kind indicated to support sealants during application and at position required to produce cross-sectional shapes and depths of installed sealants relative to joint widths that allow optimum sealant movement capability.

1. Do not leave gaps between ends of sealant backings.
2. Do not stretch, twist, puncture, or tear sealant backings.
3. Remove absorbent sealant backings that have become wet before sealant application and replace them with dry materials.

D. Install bond-breaker tape behind sealants where sealant backings are not used between sealants and backs of joints.

E. Install sealants using proven techniques that comply with the following and at the same time backings are installed:

1. Place sealants so they directly contact and fully wet joint substrates.
2. Completely fill recesses in each joint configuration.
3. Produce uniform, cross-sectional shapes and depths relative to joint widths that allow optimum sealant movement capability.

F. Tooling of Nonsag Sealants: Immediately after sealant application and before skinning or curing begins, tool sealants according to requirements specified in subparagraphs below to form smooth, uniform beads of configuration indicated; to eliminate air pockets; and to ensure contact and adhesion of sealant with sides of joint.

1. Remove excess sealant from surfaces adjacent to joints.
2. Use tooling agents that are approved in writing by sealant manufacturer and that do not discolor sealants or adjacent surfaces.
3. Provide concave joint profile per Figure 8A in ASTM C 1193, unless otherwise indicated.
4. Provide flush joint profile where indicated per Figure 8B in ASTM C 1193.

5. Provide recessed joint configuration of recess depth and at locations indicated per Figure 8C in ASTM C 1193.

    a. Use masking tape to protect surfaces adjacent to recessed tooled joints.

G. Acoustical Sealant Installation: At sound-rated assemblies and elsewhere as indicated, seal construction at perimeters, behind control joints, and at openings and penetrations with a continuous bead of acoustical sealant. Install acoustical sealant at both faces of partitions at perimeters and through penetrations. Comply with ASTM C 919 and with manufacturer's written recommendations.

3.4 CLEANING

A. Clean off excess sealant or sealant smears adjacent to joints as the Work progresses by methods and with cleaning materials approved in writing by manufacturers of joint sealants and of products in which joints occur.

3.5 PROTECTION

A. Protect joint sealants during and after curing period from contact with contaminating substances and from damage resulting from construction operations or other causes so sealants are without deterioration or damage at time of Substantial Completion. If, despite such protection, damage or deterioration occurs, cut out and remove damaged or deteriorated joint sealants immediately so installations with repaired areas are indistinguishable from original work.

3.6 JOINT-SEALANT SCHEDULE

A. Joint-Sealant Application: Exterior joints in vertical surfaces and horizontal nontraffic surfaces.

1. Joint Locations:

    a. Construction joints in cast-in-place concrete.
    b. Control and expansion joints in unit masonry.
    c. Joints between metal panels.
    d. Joints between different materials listed above.
    e. Perimeter joints between materials listed above and frames of doors, windows and louvers.
    f. Control and expansion joints in ceilings and other overhead surfaces.
    g. Other joints as indicated.

2. Polysulfide Joint Sealant: Multicomponent, nonsag.

B. Joint-Sealant Application: Interior joints in vertical surfaces and horizontal nontraffic surfaces.

1. Joint Locations:

    a. Control and expansion joints on exposed interior surfaces of exterior walls.
    b. Perimeter joints of exterior openings where indicated.
    c. Tile control and expansion joints.
    d. Vertical joints on exposed surfaces of interior unit masonry and concrete walls and partitions.

e. Perimeter joints between interior wall surfaces and frames of interior doors, windows and elevator entrances.
f. Other joints as indicated.

2. Joint Sealant: Latex.

C. Joint-Sealant Application: Mildew-resistant interior joints in vertical surfaces and horizontal nontraffic surfaces.

1. Joint Sealant Location:

a. Joints between plumbing fixtures and adjoining walls, floors, and counters.
b. Tile control and expansion joints where indicated.
c. Other joints as indicated.

2. Joint Sealant: Mildew resistant, single component, nonsag, neutral curing, silicone.

D. Joint-Sealant Application: Interior acoustical joints in vertical surfaces and horizontal nontraffic surfaces.

1. Joint Location:

a. Acoustical joints where indicated.
b. Other joints as indicated.

2. Joint Sealant: Acoustical.

END OF SECTION 079200

SECTION 079500 - EXPANSION CONTROL

PART 1 - GENERAL

1.1 RELATED DOCUMENTS

A. Drawings and general provisions of the Contract, including General and Supplementary Conditions and Division 01 Specification Sections, apply to this Section.

1.2 SUMMARY

A. Section Includes:

1. Interior expansion control systems.
2. Exterior wall expansion control systems.

B. Related Requirements:

1. Section077129 "Manufactured Roof Expansion Joints" for factory-fabricated roof expansion control.
2. Section 079200 "Joint Sealants" for liquid-applied joint sealants and for elastomeric sealants without metal frames.

1.3 ACTION SUBMITTALS

A. Shop Drawings: For each expansion control system specified. Include plans, elevations, sections, details, splices, blockout requirement, attachments to other work, and line diagrams showing entire route of each expansion control system. Where expansion control systems change planes, provide isometric or clearly detailed drawing depicting how components interconnect.

B. Samples: For each exposed expansion control system and for each color and texture specified, full width by 6 inches long in size.

C. Product Schedule: Prepared by or under the supervision of the supplier. Include the following information in tabular form:

1. Manufacturer and model number for each expansion control system.
2. Expansion control system location cross-referenced to Drawings.
3. Nominal joint width.
4. Movement capability.
5. Classification as thermal or seismic.
6. Materials, colors, and finishes.
7. Product options.
8. Fire-resistance ratings.

1.4 INFORMATIONAL SUBMITTALS

A. Product Test Reports: For each fire barrier provided as part of an expansion control system, for tests performed by a qualified testing agency.

1.5 QUALITY ASSURANCE

A. Manufacturer: Furnish assemblies from one (1) manufacturer with a minimum of five (5) years experience in the design and fabrication of expansion joint cover assemblies.

B. Installer: Firm with a minimum of five (5) years experience in installation of systems similar to those required by this project and acceptable to manufacturer.

1.6 WARRANTY

A. Manufacturer’s Standard Warranty:

1. Provide manufacturer's standard one (1) year material and workmanship warranty.
2. Finish Warranty: Warrant fluoropolymer coating to remain free, under normal atmospheric conditions, from peeling, checking, cracking, chalking in excess of numerical rating of 8 when measured in accord with ASTM D4214-89, of fading in excess of 5 N. B. S. units during warranty period. Warranty period shall be five (5) years.

B. Silicone Sealing System: When installed by the Manufacturer’s Certified Contractor shall be warranted for a period of two (2) years under specified movements and design conditions for applications. The warranty covers leakage at the joint under normal use due to cohesive or adhesive failure and material failure related to tearing, weathering or abrasion. No liability or responsibility is accepted due to defects in the surrounding substrate. The Certified Contractor and Manufacturer will jointly warrant and provide at no charge, all materials and labor needed to properly repair or replace defective product within the term of the warranty.

C. Warranties shall begin at Date of Substantial Completion.

PART 2 - PRODUCTS

2.1 SYSTEM DESCRIPTION

A. General: Provide expansion control systems of design, basic profile, materials, and operation indicated. Provide units with capability to accommodate variations in adjacent surfaces.

1. Furnish units in longest practicable lengths to minimize field splicing. Install with hairline mitered corners where expansion control systems change direction or abut other materials.
2. Include factory-fabricated closure materials and transition pieces, T-joints, corners, curbs, cross-connections, and other accessories as required to provide continuous expansion control systems.

B. Coordination: Coordinate installation of exterior wall and soffit expansion control systems with roof expansion control systems to ensure that wall transitions are watertight. Roof expansion joint assemblies are specified in Division 07 Sections.

2.2 PERFORMANCE REQUIREMENTS

A. Fire-Resistance Ratings: Where indicated, provide expansion control systems with fire barriers identical to those of systems tested for fire resistance per UL 2079 or ASTM E 1966 by a testing and inspecting agency acceptable to authorities having jurisdiction.

1. Hose Stream Test: Wall-to-wall and wall-to-ceiling systems shall be subjected to hose stream testing.

B. Seismic Performance: Expansion control systems shall withstand the effects of earthquake motions determined according to ASCE/SEI 7.

1. The term "withstand" means "the system will remain in place without separation of any parts when subjected to the seismic forces specified and the system will be fully operational after the seismic event."

2.3 INTERIOR EXPANSION CONTROL SYSTEMS

A. Basis-of-Design Product: Subject to compliance with requirements, provide product indicated or a comparable product by one (1) of the following:

1. MM Systems Corporation.

B. Manufacturers: Subject to compliance with requirements, available manufacturers offering products that may be incorporated into the Work include, but are not limited to, the following:

1. Construction Specialties, Inc.
2. JointMaster/InPro Corporation
3. Substitutions: Under provisions of Section 012500 “Substitution Procedures”.

C. Source Limitations: Obtain expansion control systems from single source from single manufacturer.

D. Wall-to-Wall:

1. **FSA-200**
2. **FSA-200-Fire**
3. **ESS (replacement at existing locations)**

E. Wall Corner:

1. **FSAL-200**
2. **ESS (replacement at existing locations)**

F. Wall-to-Ceiling/Ceiling-to-Ceiling:

1. **CX-200**
2. **VSGL-200**

2.4 EXTERIOR WALL EXPANSION CONTROL SYSTEMS

A. Basis-of-Design Product: Subject to compliance with requirements, provide product indicated or a comparable product by one (1) of the following:

1. MM Systems Corporation.

B. Manufacturers: Subject to compliance with requirements, available manufacturers offering products that may be incorporated into the Work include, but are not limited to, the following:

1. Construction Specialties, Inc.
2. EMSEAL Corporation
3. JointMaster/InPro Corporation
4. Substitutions: Under provisions of Section 012500 “Substitution Procedures”.

C. Source Limitations: Obtain expansion control systems from single source from single manufacturer.

D. Wall-to-Wall:

1. **FSA-200**
2. **FSA-200-Fire**
3. **ESS (replacement at existing locations)**

E. Wall Corner:

1. **FSAL-200**
2. **ESS (replacement at existing locations)**

2.5 MATERIALS

A. Aluminum: ASTM B 221, Alloy 6063-T5 for extrusions; ASTM B 209, Alloy 6061-T6 for sheet and plate.

1. Apply manufacturer's standard protective coating on aluminum surfaces to be placed in contact with cementitious materials.

B. Elastomeric Seals: ASTM E 1783; preformed elastomeric membranes or extrusions to be installed in metal frames.

C. Fire Barriers: Any material or material combination, when fire tested after cycling, designated to resist the passage of flame and hot gases through a movement joint and to meet performance criteria for required fire-resistance rating.

D. Silicone Sealing System: System shall consist of a high performance engineered silicone seal that is factory cured and fused to a cellular polyester/polyurethane foam backer block creating a monolithic and binary sealing system. A field applied primerless one-part silicone sealant is used to achieve a 3-sided bond to the expansion joint sidewalls on each side of the seal.

1. Select the system size at each joint location based on the movement and design requirements that meet the project specification.

E. Accessories: Manufacturer's standard anchors, clips, fasteners, set screws, spacers, and other accessories compatible with material in contact, as indicated or required for complete installations.

2.6 GENERAL FINISH REQUIREMENTS

A. Comply with NAAMM's "Metal Finishes Manual for Architectural and Metal Products" for recommendations for applying and designating finishes.

B. Protect mechanical finishes on exposed surfaces from damage by applying a strippable, temporary protective covering before shipping.

C. Appearance of Finished Work: Noticeable variations in same piece are not acceptable. Variations in appearance of adjoining components are acceptable if they are within the range of approved Samples and are assembled or installed to minimize contrast.

2.7 ALUMINUM FINISHES

A. Mill finish.

2.8 SILICONE FINISHES

A. Silicone seal color shall be selected and approved by the Architect and Owner from the manufacturer’s full range including custom color matching.

PART 3 - EXECUTION

3.1 EXAMINATION

A. Examine surfaces where expansion control systems will be installed for installation tolerances and other conditions affecting performance of work.

1. Proceed with installation only after unsatisfactory conditions have been corrected.

3.2 PREPARATION

A. Prepare substrates according to expansion control system manufacturer's written instructions.

B. Coordinate and furnish anchorages, setting drawings, and instructions for installing expansion control systems. Provide fasteners of metal, type, and size to suit type of construction indicated and to provide for secure attachment of expansion control systems.

3.3 INSTALLATION

A. Comply with manufacturer's written instructions for storing, handling, and installing expansion control systems and materials unless more stringent requirements are indicated.

B. Metal Frames: Perform cutting, drilling, and fitting required to install expansion control systems.

1. Install in true alignment and proper relationship to joints and adjoining finished surfaces measured from established lines and levels.
2. Adjust for differences between actual structural gap and nominal design gap due to ambient temperature at time of installation. Notify Architect where discrepancies occur that will affect proper expansion control system installation and performance.
3. Cut and fit ends to accommodate thermal expansion and contraction of metal without buckling of frames.
4. Repair or grout blockout as required for continuous frame support using nonmetallic, shrinkage-resistant grout.

5. Install frames in continuous contact with adjacent surfaces.

   a. Shimming is not permitted.

6. Locate anchors at interval recommended by manufacturer, but not less than 3 inches from each end and not more than 24 inches o.c.

C. Seals in Metal Frames: Install elastomeric seals and membranes in frames to comply with manufacturer's written instructions. Install with minimum number of end joints.

1. Provide in continuous lengths for straight sections.
2. Seal transitions according to manufacturer's written instructions. Vulcanize or heat-weld field-spliced joints as recommended by manufacturer.
3. Installation: Mechanically lock seals into frames or adhere to frames with adhesive or pressure-sensitive tape as recommended by manufacturer.

D. Terminate exposed ends of expansion control systems with field- or factory-fabricated termination devices.

E. Silicone Sealing System: Install system to comply with manufacturer’s written instructions.

1. Compress the foam backer block by hand and insert into the expansion joint opening.
2. Recess the highest point of the silicone strip ¼ inch below the surface.
3. Position and center the factory preformed silicone strip creating equal reveals on each side.
4. As necessary, mask areas adjacent to the joint with tape to assure neat, clean joint lines. (Remove tape prior to the curing process.)
5. Apply silicone sealant in the reveals on each side of the factory preformed silicone strip with manufacturer’s silicone. Tool immediately to insure firm contact and secure bond.

F. Fire-Resistance-Rated Assemblies: Coordinate installation of expansion control system materials and associated work so complete assemblies comply with assembly performance requirements.

1. Fire Barriers: Install fire barriers to provide continuous, uninterrupted fire resistance throughout length of joint, including transitions and field splices.

3.4 PROTECTION

A. Do not remove protective covering until finish work in adjacent areas is complete. When protective covering is removed, clean exposed metal surfaces to comply with manufacturer's written instructions.

B. Protect the installation from damage by work of other Sections. Where necessary due to heavy construction traffic, remove and properly store cover plates or seals and install temporary protection over expansion control systems. Reinstall cover plates or seals prior to Substantial Completion of the Work.

END OF SECTION 079500

SECTION 081113 - HOLLOW METAL DOORS AND FRAMES

PART 1 - GENERAL

1.1 RELATED DOCUMENTS

A. Drawings and general provisions of the Contract, including General and Supplementary Conditions and Division 01 Specification Sections, apply to this Section.

1.2 SUMMARY

A. Section Includes:

1. Standard and custom hollow metal doors and frames.
2. Steel sidelight, borrowed lite and transom frames.
3. Louvers installed in hollow metal doors
4. Light frames and glazing installed in hollow metal doors.

B. Related Sections:

1. Division 01 Section "Sustainable Design Requirements" for additional LEED documentation and requirements.
2. Section 019113 “General Commissioning Requirements” for commissioning requirements related to this Division.
3. Section 083473 "Sound Control Door Assemblies" for packaged, acoustical hollow-metal door and frame assemblies with STC ratings of 35 or more.
4. Division 04 Section "Unit Masonry" for embedding anchors for hollow metal work into masonry construction.
5. Division 08 Section “Flush Wood Doors”.
6. Division 08 Section "Glazing" for glass view panels in hollow metal doors.
7. Division 08 Section "Door Hardware".
8. Division 09 Sections "Exterior Painting" and "Interior Painting" for field painting hollow metal doors and frames.
9. Division 26 "Electrical" Sections for electrical connections including conduit and wiring for door controls and operators installed on frames with factory installed electrical knock out boxes.
10. Division 28 Section "Access Control" for access control devices installed at door openings and provided as part of a security access control system.

C. Codes and References: Comply with the version year adopted by the Authority Having Jurisdiction.

1. ANSI/SDI A250.8 - Recommended Specifications for Standard Steel Doors and Frames.
2. ANSI/SDI A250.4 - Test Procedure and Acceptance Criteria for Physical Endurance for Steel Doors, Frames, Frames Anchors and Hardware Reinforcing.
3. ANSI/SDI A250.6 - Recommended Practice for Hardware Reinforcing on Standard Steel Doors and Frames.

4. ANSI/SDI A250.10 - Test Procedure and Acceptance Criteria for Prime Painted Steel Surfaces for Steel Doors and Frames.
5. ANSI/SDI A250.11 - Recommended Erection Instructions for Steel Frames.
6. ASTM A1008 - Standard Specification for Steel Sheet, Cold-Rolled, Carbon, Structural, High-Strength Low-Alloy and High-Strength Low-Alloy with Improved Formability.
7. ASTM A653 - Standard Specification for Steel Sheet, Zinc-Coated (Galvanized) or Zinc-Iron Alloy-Coated (Galvannealed) by the Hot-Dip Process.
8. ASTM A924 - Standard Specification for General Requirements for Steel Sheet, Metallic-Coated by the Hot-Dip Process.
9. ASTM C 1363 - Standard Test Method for Thermal Performance of Building Assemblies by Means of a Hot Box Apparatus.
10. ANSI/BHMA A156.15 - Hardware Preparation in Steel Doors and Frames.
11. ANSI/SDI 122 - Installation and Troubleshooting Guide for Standard Steel Doors and Frames.
12. ANSI/NFPA 80 - Standard for Fire Doors and Fire Windows; National Fire Protection Association.
13. ANSI/NFPA 105: Standard for the Installation of Smoke Door Assemblies.
14. NFPA 252 - Standard Methods of Fire Tests of Door Assemblies; National Fire Protection Association.
15. UL 10C - Positive Pressure Fire Tests of Door Assemblies.
16. UL 1784 - Standard for Air Leakage Tests of Door Assemblies.

1.3 SUBMITTALS

A. Product Data: For each type of product indicated. Include construction details, material descriptions, core descriptions, hardware reinforcements, profiles, anchors, fire-resistance rating, and finishes.

B. Door hardware supplier is to furnish templates, template reference number and/or physical hardware to the steel door and frame supplier in order to prepare the doors and frames to receive the finish hardware items.

C. Shop Drawings: Include the following:

1. Elevations of each door design.
2. Details of doors, including vertical and horizontal edge details and metal thicknesses.
3. Frame details for each frame type, including dimensioned profiles and metal thicknesses.
4. Locations of reinforcement and preparations for hardware.
5. Details of anchorages, joints, field splices, and connections.
6. Details of accessories.
7. Details of moldings, removable stops, and glazing.
8. Details of conduit and preparations for power, signal, and control systems.

D. HPBS Submittals:

1. Product Data for Section 16a-38k-6(d)(9): For products having recycled content, documentation indicating percentages by weight of postconsumer and preconsumer recycled content. Include statement indicating cost for each product having recycled content.

E. Samples for Verification:

1. Samples are only required by request of the architect and for manufactures that are not current members of the Steel Door Institute.

1.4 QUALITY ASSURANCE

A. Source Limitations: Obtain hollow metal doors and frames through one source from a single manufacturer wherever possible.

B. Quality Standard: In addition to requirements specified, comply with ANSI/SDI A250.8, latest edition, "Recommended Specifications for Standard Steel Doors and Frames".

C. Fire-Rated Door Assemblies: Assemblies complying with NFPA 80 that are listed and labeled by a qualified testing agency, for fire-protection ratings indicated, based on testing at positive pressure according to NFPA 252 (neutral pressure at 40” above sill) or UL 10C.

1. Oversize Fire-Rated Door Assemblies Construction: For units exceeding sizes of tested assemblies, attach construction label certifying doors are built to standard construction requirements for tested and labeled fire rated door assemblies except for size.
2. Temperature-Rise Limit: Where indicated and at vertical exit enclosures (stairwell openings) and exit passageways, provide doors that have a maximum transmitted temperature end point of not more than 450 deg F (250 deg C) above ambient after 30 minutes of standard fire-test exposure.
3. Smoke Control Door Assemblies: Comply with NFPA 105.

a. Smoke "S" Label: Doors to bear “S” label, and include smoke and draft control gasketing applied to frame and on meeting stiles of pair doors.

D. Fire-Rated, Borrowed-Light Frame Assemblies: Assemblies complying with NFPA 80 that are listed and labeled, by a testing and inspecting agency acceptable to authorities having jurisdiction, for fire-protection ratings indicated, based on testing according to NFPA 257. Provide labeled glazing material.

E. Energy Efficient Exterior Openings: Comply with minimum thermal ratings, based on ASTM C1363. Openings to be fabricated and tested as fully operable, thermal insulating door and frame assemblies.

1. Thermal Performance (Exterior Openings): Independent testing laboratory certification for exterior door assemblies being tested in accordance with ASTM C1363 and meet or exceed the following requirements:

a. Door Assembly Operable U-Factor and R-Value Ratings: U-Factor 0.29, R-Value 3.4, including insulated door, thermal-break frame and threshold.

2. Air Infiltration (Exterior Openings): Independent testing laboratory certification for exterior door assemblies being tested in accordance with ASTM E283 to meet or exceed the following requirements:

a. Rate of leakage of the door assembly shall not exceed 0.25 cfm per square foot of static differential air pressure of 1.567 psf (equivalent to 25 mph wind velocity).

F. Pre-Submittal Conference: Conduct conference in compliance with requirements in Division 01 Section "Project Meetings" with attendance by representatives of Supplier, Installer, and Contractor to review proper methods and procedures for installing hollow metal doors and frames and to verify installation of electrical knockout boxes and conduit at frames with electrified or access control hardware.

1.5 DELIVERY, STORAGE, AND HANDLING

A. Deliver hollow metal work palletized, wrapped, or crated to provide protection during transit and Project site storage. Do not use non-vented plastic.

B. Deliver welded frames with two removable spreader bars across bottom of frames, tack welded to jambs and mullions.

C. Store hollow metal work under cover at Project site. Place in stacks of five units maximum in a vertical position with heads up, spaced by blocking, on minimum 4-inch high wood blocking. Do not store in a manner that traps excess humidity.

1. Provide minimum 1/4-inch space between each stacked door to permit air circulation. Door and frames to be stacked in a vertical upright position.

1.6 PROJECT CONDITIONS

A. Field Measurements: Verify actual dimensions of openings by field measurements before fabrication.

1.7 COORDINATION

A. Coordinate installation of anchorages for hollow metal frames. Furnish setting drawings, templates, and directions for installing anchorages, including sleeves, concrete inserts, anchor bolts, and items with integral anchors. Deliver such items to Project site in time for installation.

1.8 WARRANTY

A. Special Warranty: Manufacturer's standard form in which manufacturer agrees to repair or replace doors that fail in materials or workmanship within specified warranty period.

B. Warranty includes installation and finishing that may be required due to repair or replacement of defective doors.

PART 2 - PRODUCTS

2.1 MANUFACTURERS

A. Manufacturers: Subject to compliance with requirements, provide products by one of the following:

1. CECO Door Products.

2. Curries Company.
3. Steelcraft.

2.2 MATERIALS

A. Cold-Rolled Steel Sheet: ASTM A 1008/A 1008M, Commercial Steel (CS), Type B; suitable for exposed applications.

B. Metallic-Coated Steel Sheet: ASTM A 653/A 653M, Commercial Steel (CS), Type B; with minimum G60 (Z180) or A60 (ZF180) metallic coating.

C. Frame Anchors: ASTM A 653/A 653M, Commercial Steel (CS), Commercial Steel (CS), Type B; with minimum G60 (Z180) or A60 (ZF180) metallic coating.

2.3 STANDARD HOLLOW METAL DOORS

A. General: Provide 1-3/4 inch doors of design indicated, not less than thickness indicated; fabricated with smooth surfaces, without visible joints or seams on exposed faces unless otherwise indicated. Comply with ANSI/SDI A250.8.

B. Exterior Doors: Face sheets fabricated of commercial quality hot-dipped zinc coated steel that complies with ASTM A 653/A 653M, Coating Designation A60. Provide doors complying with requirements indicated below by referencing ANSI/SDI A250.8 for level and model and ANSI/SDI A250.4 for physical performance level:

1. Design: Flush panel.
2. Core Construction: Manufacturer's standard vertical steel-stiffener core. Minimum 22 gauge steel-stiffeners at 6 inches on-center construction attached by spot welds spaced not more than 5" on centers. Spaces between stiffeners filled with fiberglass insulation (minimum density 0.8#/cubic ft.).
3. Level/Model: Level 3 and Physical Performance Level A (Extra Heavy Duty), Minimum 16 gauge (0.053-inch - 1.3-mm) thick steel, Model 2.
4. Vertical Edges: Vertical edges to have the face sheets joined by a continuous weld extending the full height of the door. Welds are to be ground, filled and dressed smooth. Beveled Lock Edge, 1/8 inch in 2 inches (3 mm in 50 mm).
5. Top and Bottom Edges: Reinforce tops and bottoms of doors with a continuous steel channel not less than 16 gauge, extending the full width of the door and welded to the face sheet. Doors with an inverted top channel to include a steel closure channel, screw attached, with the web of the channel flush with the face sheets of the door. Plastic or composite channel fillers are not acceptable.
6. Hinge Reinforcement: Minimum 7 gauge (3/16") plate 1-1/4" x 9" or minimum 14 gauge continuous channel with pierced holes, drilled and tapped.
7. Hardware Reinforcements: Fabricate according to ANSI/SDI A250.6 with reinforcing plates from same material as door face sheets.

C. Interior Doors: Face sheets fabricated of commercial quality cold rolled steel that complies with ASTM A 1008/A 1008M. Provide doors complying with requirements indicated below by referencing ANSI/SDI A250.8 for level and model and ANSI/SDI A250.4 for physical performance level:

1. Design: Flush panel.
2. Core Construction: Manufacturer's standard kraft-paper honeycomb, or one-piece polystyrene core, securely bonded to both faces.

    a. Fire Door Core: As required to provide fire-protection and temperature-rise ratings indicated.

3. Vertical Edges: Vertical edges to have the face sheets spot welded and filled full height with an epoxy filler. Welds are to be ground, filled and dressed smooth. Beveled Lock Edge, 1/8 inch in 2 inches (3 mm in 50 mm).
4. Top and Bottom Edges: Reinforce tops and bottoms of doors with a continuous steel channel not less than 16 gauge, extending the full width of the door and welded to the face sheet.
5. Hinge Reinforcement: Minimum 7 gauge (3/16") plate 1-1/4" x 9" or minimum 14 gauge continuous channel with pierced holes, drilled and tapped.
6. Hardware Reinforcements: Fabricate according to ANSI/SDI A250.6 with reinforcing plates from same material as door face sheets.

D. Manufacturers Basis of Design:

1. CECO Door Products.
2. Curries Company.

2.4 ENERGY EFFICIENCY HOLLOW METAL DOORS - EXTERIOR

A. General: Provide 1-3/4 inch doors of design specified, not less than thickness indicated; fabricated with smooth surfaces, without visible joints or seams on exposed faces unless otherwise indicated. Comply with ANSI/SDI A250.8 and ANSI/NAAMM HMMA 867.

B. Exterior Doors: Face sheets fabricated of commercial quality hot-dipped zinc coated steel that complies with ASTM A924 A60. Provide doors complying with requirements indicated below by referencing ANSI/SDI A250.8 for level and model, ANSI/SDI A250.4 for physical performance level, and HMMA 867 for door construction.

1. Design: Flush panel.
2. Core Construction: Foamed in place polyurethane and steel stiffened laminated core with no stiffener face welds, in compliance with HMMA 867 “Laminated Core”.

    a. Provide 22 gauge steel stiffeners at 6 inches on-center internally welded at 5" on-center to integral core assembly, foamed in place polyurethane core chemically bonded to all interior surfaces. No stiffener face welding is permitted.
    b. Thermal properties to rate at a fully operable minimum U-Factor 0.29 and R-Value 3.4, including insulated door, thermal-break frame and threshold.

        1) Kerf Type Frames: Thermal properties to rate at a fully operable minimum U-Factor 0.36 and R-Value 2.8, including insulated door, kerf type frame, and threshold.

3. Level/Model: Level 3 (Extra Heavy Duty), Minimum 16 gauge (0.053 inch - 1.3-mm) thick steel, Model 2.

4. Vertical Edges: Vertical edges to be continuously welded. Beveled Lock Edge, 1/8 inch in 2 inches (3 mm in 50 mm).
5. Top and Bottom Edges: Reinforce tops and bottoms of doors with a continuous steel channel not less than 16 gauge, extending the full width of the door and welded to the face sheet. Doors with an inverted top channel to include a steel closure channel, screw attached, with the web of the channel flush with the face sheets of the door. Plastic or composite channel fillers are not acceptable.
6. Hinge Reinforcement: Minimum 7 gauge (3/16") plate 1-1/4" x 9".
7. Hardware Reinforcements: Fabricate according to ANSI/SDI A250.6 with reinforcing plates from same material as door face sheets.

C. Manufacturers Basis of Design:

1. CECO Door Products Trio-E/Trio Series.
2. Curries Company 777 Trio-E/Trio Series.

2.5 STANDARD HOLLOW METAL FRAMES

A. General: Comply with ANSI/SDI A250.8 and with details indicated for type and profile.

B. Interior Frames: Fabricated from cold-rolled steel sheet that complies with ASTM A 1008/A 1008M.

1. Fabricate frames with mitered or coped corners.
2. Fabricate frames with "closed and tight" miter seams continuously welded, full-profile, finished smooth with no visible seam unless otherwise indicated.
3. Frames for Doors (up to 48 inches in width): Minimum 16 gauge (0.053-inch -1.3-mm) thick steel sheet.
4. Frames for Doors (48 inches and up in width): Minimum 14 gauge (0.067-inch -1.7-mm) thick steel sheet.
5. Frames for Borrowed Lights: Minimum 16 gauge (0.053-inch-1.3-mm-) thick steel sheet.
6. Manufacturers Basis of Design:

a. CECO Door Products.
b. Curries Company.

C. Fire rated frames: Fabricate frames in accordance with NFPA 80, listed and labeled by a qualified testing agency, for fire-protection ratings indicated.

D. Hardware Reinforcement: Fabricate according to ANSI/SDI A250.6 Table 4 with reinforcement plates from same material as frames.

2.6 ENERGY EFFICIENCY HOLLOW METAL FRAMES - EXTERIOR

A. Thermal Break Frames: Subject to the same compliance standards and requirements as standard hollow metal frames, provide where indicated thermally broken frame profiles available for use in both masonry and drywall construction. Fabricate from 14 gauge A60 galvannealed steel, with positive 3/8" vinyl thermal break and integral vinyl weatherstripping.

1. Manufacturers Basis of Design:

a. CECO Door Products - Thermal Break SQT and SRT Series.
b. Curries Company - Thermal Break M and C Series.

2.7 FRAME ANCHORS

A. Jamb Anchors:

1. Masonry Type: Adjustable strap-and-stirrup or T-shaped anchors to suit frame size, formed from A60 metallic coated material, not less than 0.042 inch thick, with corrugated or perforated straps not less than 2 inches wide by 10 inches long; or wire anchors not less than 0.177 inch thick.
2. Stud Wall Type: Designed to engauge stud and not less than 0.042 inch thick.

B. Floor Anchors: Floor anchors to be provided at each jamb, formed from A60 metallic coated material, not less than 0.042 inches thick.

C. Mortar Guards: Formed from same material as frames, not less than 0.016 inches thick.

2.8 HOLLOW METAL PANELS

A. Provide hollow metal panels of same materials, construction, and finish as specified for adjoining hollow metal work.

2.9 LOUVERS

A. Metal Louvers: Door manufacturer's standard metal louvers unless otherwise indicated.

1. Blade Type: Vision proof inverted V or inverted Y.
2. Metal and Finish: Galvanized steel, 0.040 inch thick, factory primed for paint finish with baked enamel or powder coated finish. Match pre-finished door paint color where applicable.

B. Louvers for Fire Rated Doors: Metal louvers with fusible link and closing device, listed and labeled for use in doors with fire protection rating of 1-1/2 hours and less.

1. Manufacturers: Subject to compliance with requirements, provide door manufacturers standard louver to meet rating indicated.
2. Metal and Finish: Galvanized steel, 0.040 inch thick, factory primed for paint finish with baked enamel or powder coated finish. Match pre-finished door paint color where applicable.

2.10 LIGHT OPENINGS AND GLAZING

A. Stops and Moldings: Provide stops and moldings around glazed lites where indicated. Form corners of stops and moldings with butted or mitered hairline joints at fabricator’s shop. Fixed and removable stops to allow multiple glazed lites each to be removed independently. Coordinate frame rabbet widths between fixed and removable stops with the type of glazing and installation indicated.

B. Moldings for Glazed Lites in Doors and Loose Stops for Glazed Lites in Frames: Minimum 20 gauge thick, fabricated from same material as door face sheet in which they are installed.

C. Fixed Frame Moldings: Formed integral with hollow metal frames, a minimum of 5/8 inch (16 mm) high unless otherwise indicated. Provide fixed frame moldings and stops on outside of exterior and on secure side of interior doors and frames

D. Preformed Metal Frames for Light Openings: Manufacturer's standard frame formed of 0.048-inch-thick, cold rolled steel sheet; with baked enamel or powder coated finish; and approved for use in doors of fire protection rating indicated. Match pre-finished door paint color where applicable.

E. Glazing: Comply with requirements in Division 08 Section "Glazing" and with the hollow metal door manufacturer's written instructions.

1. Factory Glazing: Factory install glazing in doors as indicated. Doors with factory installed glass to include all of the required glazing material.

2.11 ACCESSORIES

A. Mullions and Transom Bars: Join to adjacent members by welding or rigid mechanical anchors.

B. Grout Guards: Formed from same material as frames, not less than 0.016 inches thick.

2.12 FABRICATION

A. Fabricate hollow metal work to be rigid and free of defects, warp, or buckle. Accurately form metal to required sizes and profiles, with minimum radius for thickness of metal. Where practical, fit and assemble units in manufacturer's plant. When shipping limitations so dictate, frames for large openings are to be fabricated in sections for splicing or splining in the field by others.

B. Tolerances: Fabricate hollow metal work to tolerances indicated in ANSI/SDI A250.8.

C. Hollow Metal Doors:

1. Exterior Doors: Provide optional weep-hole openings in bottom of exterior doors to permit moisture to escape where specified.
2. Glazed Lites: Factory cut openings in doors with applied trim or kits to fit. Factory install glazing where indicated.
3. Louvers: Factory cut openings in door and install louvers into prepared openings where indicated.
4. Astragals: Provide overlapping astragals as noted in door hardware sets in Division 08 Section "Door Hardware" on one leaf of pairs of doors where required by NFPA 80 for fire-performance rating or where indicated. Extend minimum 3/4 inch beyond edge of door on which astragal is mounted.
5. Continuous Hinge Reinforcement: Provide welded continuous 12 gauge strap for continuous hinges specified in hardware sets in Division 08 Section "Door Hardware".
6. Electrical Raceways: Provide hollow metal doors to receive electrified hardware with concealed wiring harness and standardized Molex™ plug connectors on both ends to

accommodate up to twelve wires. Coordinate connectors on end of the wiring harness to plug directly into the electrified hardware and the through-wire transfer hardware or wiring harness specified in hardware sets in Division 08 Sections "Door Hardware" and "Access Control Hardware". Wire nut connections are not acceptable.

D. Hollow Metal Frames:

1. Shipping Limitations: Where frames are fabricated in sections due to shipping or handling limitations, provide alignment plates or angles at each joint, fabricated of same thickness metal as frames.
2. Welded Frames: Weld flush face joints continuously; grind, fill, dress, and make smooth, flush, and invisible.

    a. Welded frames are to be provided with two steel spreaders temporarily attached to the bottom of both jambs to serve as a brace during shipping and handling. Spreader bars are for bracing only and are not to be used to size the frame opening.

3. Sidelight and Transom Bar Frames: Provide closed tubular members with no visible face seams or joints, fabricated from same material as door frame. Fasten members at crossings and to jambs by butt welding.
4. High Frequency Hinge Reinforcement: Provide high frequency hinge reinforcements at door openings 48-inches and wider with mortise butt type hinges at top hinge locations.
5. Continuous Hinge Reinforcement: Provide welded continuous 12 gauge straps for continuous hinges specified in hardware sets in Division 08 Section "Door Hardware".
6. Provide countersunk, flat- or oval-head exposed screws and bolts for exposed fasteners unless otherwise indicated for removable stops, provide security screws at exterior locations.
7. Mortar Guards: Provide guard boxes at back of hardware mortises in frames at all hinges and strike preps regardless of grouting requirements.
8. Electrical Knock Out Boxes: Factory weld 18 gauge electrical knock out boxes to frame for electrical hardware preps; including but not limited to, electric through wire transfer hardware, electrical raceways and wiring harnesses, door position switches, electric strikes, magnetic locks, and jamb mounted card readers as specified in hardware sets in Division 08 Sections "Door Hardware" and "Access Control Hardware".

    a. Provide electrical knock out boxes with a dual 1/2-inch and 3/4-inch knockouts.
    b. Conduit to be coordinated and installed in the field (Division 26) from middle hinge box and strike box to door position box.
    c. Electrical knock out boxes to comply with NFPA requirements and fit electrical door hardware as specified in hardware sets in Division 08 Section "Door Hardware".
    d. Electrical knock out boxes for continuous hinges should be located in the center of the vertical dimension on the hinge jamb.

9. Floor Anchors: Weld anchors to bottom of jambs and mullions with at least four spot welds per anchor.
10. Jamb Anchors: Provide number and spacing of anchors as follows:

    a. Masonry Type: Locate anchors not more than 18 inches from top and bottom of frame. Space anchors not more than 32 inches o.c. and as follows:

1) Two anchors per jamb up to 60 inches high.
2) Three anchors per jamb from 60 to 90 inches high.
3) Four anchors per jamb from 90 to 120 inches high.
4) Four anchors per jamb plus 1 additional anchor per jamb for each 24 inches or fraction thereof above 120 inches high.

b. Stud Wall Type: Locate anchors not more than 18 inches from top and bottom of frame. Space anchors not more than 32 inches o.c. and as follows:

1) Three anchors per jamb up to 60 inches high.
2) Four anchors per jamb from 60 to 90 inches high.
3) Five anchors per jamb from 90 to 96 inches high.
4) Five anchors per jamb plus 1 additional anchor per jamb for each 24 inches or fraction thereof above 96 inches high.
5) Two anchors per head for frames above 42 inches wide and mounted in metal stud partitions.

11. Door Silencers: Except on weatherstripped or gasketed doors, drill stops to receive door silencers. Silencers to be supplied by frame manufacturer regardless if specified in Division 08 Section "Door Hardware".

E. Hardware Preparation: Factory prepare hollow metal work to receive template mortised hardware; include cutouts, reinforcement, mortising, drilling, and tapping according to the Door Hardware Schedule and templates furnished as specified in Division 08 Section "Door Hardware."

1. Locate hardware as indicated, or if not indicated, according to ANSI/SDI A250.8.
2. Reinforce doors and frames to receive non-template, mortised and surface mounted door hardware.
3. Comply with applicable requirements in ANSI/SDI A250.6 and ANSI/DHI A115 Series specifications for preparation of hollow metal work for hardware.
4. Coordinate locations of conduit and wiring boxes for electrical connections with Division 26 Sections.

2.13 STEEL FINISHES

A. Prime Finishes: Doors and frames to be cleaned, and chemically treated to insure maximum finish paint adhesion. Surfaces of the door and frame exposed to view to receive a factory applied coat of rust inhibiting shop primer.

1. Shop Primer: Manufacturer's standard, fast-curing, lead and chromate free primer complying with ANSI/SDI A250.10 acceptance criteria; recommended by primer manufacturer for substrate; and compatible with substrate and field-applied coatings.

B. Bituminous Coating: Cold-applied asphalt mastic, compounded for 15-mil dry film thickness per coat. Provide inert-type noncorrosive compound free of asbestos fibers, sulfur components, and other deleterious impurities.

PART 3 - EXECUTION

3.1 EXAMINATION

A. Examine substrates, areas, and conditions, with Installer present, for compliance with requirements for installation tolerances and other conditions affecting performance of the Work.

B. General Contractor to verify the accuracy of dimensions given to the steel door and frame manufacturer for existing openings or existing frames (strike height, hinge spacing, hinge back set, etc.).

C. Proceed with installation only after unsatisfactory conditions have been corrected.

3.2 PREPARATION

A. Remove welded in shipping spreaders installed at factory. Restore exposed finish by grinding, filling, and dressing, as required to make repaired area smooth, flush, and invisible on exposed faces.

B. Prior to installation, adjust and securely brace welded hollow metal frames for squareness, alignment, twist, and plumbness.

C. Tolerances shall comply with SDI-117 "Manufacturing Tolerances Standard Steel Doors and Frames."

D. Drill and tap doors and frames to receive non-template, mortised, and surface-mounted door hardware.

3.3 INSTALLATION

A. General: Install hollow metal work plumb, rigid, properly aligned, and securely fastened in place; comply with Drawings and manufacturer's written instructions.

B. Hollow Metal Frames: Install hollow metal frames of size and profile indicated. Comply with ANSI/SDI A250.11 and NFPA 80 at fire rated openings.

1. Set frames accurately in position, plumbed, aligned, and braced securely until permanent anchors are set. After wall construction is complete and frames properly set and secured, remove temporary braces, leaving surfaces smooth and undamaged. Shim as necessary to comply with installation tolerances.

2. Floor Anchors: Provide floor anchors for each jamb and mullion that extends to floor, and secure with post-installed expansion anchors.
3. Masonry Walls: Coordinate installation of frames to allow for solidly filling space between frames and masonry with mortar.
4. Grout Requirements: Do not grout head of frames unless reinforcing has been installed in head of frame. Do not grout vertical or horizontal closed mullion members.

C. Hollow Metal Doors: Fit hollow metal doors accurately in frames, within clearances specified below. Shim as necessary.

1. Non-Fire-Rated Standard Steel Doors:

    a. Jambs and Head: 1/8 inch plus or minus 1/16 inch.
    b. Between Edges of Pairs of Doors: 1/8 inch plus or minus 1/16 inch.
    c. Between Bottom of Door and Top of Threshold: Maximum 3/8 inch.
    d. Between Bottom of Door and Top of Finish Floor (No Threshold): Maximum 1/2 inch.

2. Fire-Rated Doors: Install doors with clearances according to NFPA 80.

D. Field Glazing: Comply with installation requirements in Division 08 Section "Glazing" and with hollow metal manufacturer's written instructions.

3.4 ADJUSTING AND CLEANING

A. Final Adjustments: Check and readjust operating hardware items immediately before final inspection. Leave work in complete and proper operating condition. Remove and replace defective work, including hollow metal work that is warped, bowed, or otherwise unacceptable.

B. Remove grout and other bonding material from hollow metal work immediately after installation.

C. Prime-Coat and Painted Finish Touchup: Immediately after erection, sand smooth rusted or damaged areas of prime coat, or painted finishes, and apply touchup of compatible air drying, rust-inhibitive primer, zinc rich primer (exterior and galvanized openings) or finish paint.

END OF SECTION 081113

SECTION 081416 - FLUSH WOOD DOORS

PART 1 - GENERAL

1.1 RELATED DOCUMENTS

A. Drawings and general provisions of the Contract, including General and Supplementary Conditions and Division 1 Specification Sections, apply to this Section.

1.2 SUMMARY

A. Section Includes:

1. Solid core doors with wood veneer faces.
2. Factory finishing wood doors.
3. Factory fitting wood doors to frames and factory machining for hardware.
4. Louvers installed in flush wood doors.
5. Light frames and glazing installed in wood doors.

B. Related Sections:

1. Division 01 Section "Sustainable Design Requirements" for additional LEED documentation and requirements.
2. Division 08 Section "Hollow Metal Doors and Frames" for wood doors in steel frames.
3. Division 08 Section "Glazing" for glass view panels in wood doors.
4. Division 08 Section "Door Hardware" for door hardware for flush wood doors and wood frames.
5. Division 08 Section "Wood Sound-Control Doors".

C. Standards and References: Comply with the version year adopted by the Authority Having Jurisdiction.

1. ANSI A208.1 – Wood Particleboard.
2. Forestry Stewardship Council (FSC) - Guidelines for environmentally certified wood doors.
3. Intertek Testing Service (ITS Warnock Hersey) - Certification Listings for Fire Doors.
4. NFPA 80 - Standard for Fire Doors and Fire Windows; National Fire Protection Association.
5. NFPA 252 - Standard Methods of Fire Tests of Door Assemblies; National Fire Protection Association.
6. UL 10C - Positive Pressure Fire Tests of Door Assemblies; UL 1784 - Standard for Air Leakage Tests of Door Assemblies.
7. United States Green Building Council (USGBC).
8. Window and Door Manufacturers Association - WDMA I.S.1-A Architectural Wood Flush Doors.

1.3 SUBMITTALS

A. Product Data: For each type of door indicated. Include details of core and edge construction, louvers, trim for openings, and WDMA I.S.1-A or AWS classifications. Include factory finishing specifications.

B. Door hardware supplier is to furnish templates, template reference number and/or physical hardware to the wood door supplier in order to prepare the doors and frames to receive the finish hardware items.

C. Shop Drawings: Indicate location, size, and hand of each door; elevation of each kind of door; construction details not covered in Product Data; location and extent of hardware blocking; and other pertinent data.

1. Indicate dimensions and locations of mortises and holes for hardware.
2. Indicate dimensions and locations of cutouts.
3. Indicate requirements for veneer matching.
4. Indicate doors to be factory finished and finish requirements.
5. Indicate fire protection ratings for fire rated doors.

D. Samples for Initial Selection: For factory finished doors.

1. Factory finishes applied to actual door face materials, approximately 8 by 10 inches, for each material and finish. For each wood species and transparent finish, provide set of three samples showing typical range of color and grain to be expected in the finished work.

2. Corner sections of doors, 8 by 10 inches, with door faces and edges representing actual materials to be used.

   a. Provide samples for each species of veneer and solid lumber required.
   b. Finish veneer faced door samples with same materials proposed for factory finished doors.

3. Frames for light openings, 6 inches long, for each material, type, and finish required.

E. Informational Submittals:

1. Submit manufacturer's environmental documentation and applicable sustainability program credits that are available to contribute towards a LEED rated project certification.

F. Warranty: Sample of special warranties.

1.4 QUALITY ASSURANCE

A. Source Limitations: Obtain flush wood doors through one source from a single manufacturer wherever possible.

B. Quality Standard: In addition to requirements specified, comply with WDMA I.S.1-A, latest edition, "Industry Standard for Architectural Wood Flush Doors’.

C. Fire Rated Wood Doors: Doors complying with NFPA 80 that are listed and labeled by a testing and inspecting agency acceptable to authorities having jurisdiction, for fire ratings indicated, based on testing at positive pressure according to NFPA 252 (neutral pressure at 40” above sill) or UL 10C (neutral pressure testing according to UL 10B where specified).

1. Oversize Fire Rated Door Assemblies: For units exceeding sizes of tested assemblies provide manufacturer’s construction label, indicating compliance to independent 3rd party certification agency’s procedure, except for size.

2. Temperature Rise Limit: Where indicated and at vertical exit enclosures (stairwell openings) and exit passageways, provide doors that have a maximum transmitted temperature end point of not more than 450 deg F (250 deg C) above ambient after 30 minutes of standard fire test exposure.

3. Smoke Control Door Assemblies: Comply with NFPA 105.

   1) Smoke "S" Label: Doors to bear “S” label, and include smoke and draft control gasketing applied to frame and on meeting stiles of pair doors.

4. Blocking: When through-bolts are not to be used, indicate size and location of blocking in 45, 60 and 90 minute mineral core doors.

D. Environmental Certification: Provide Forestry Stewardship Council (FSC) authorized certificate for doors requiring environmental certification. Environmental certification ensures that wood components come from certified forests and are processed by certified chain-of-custody manufacturers.

E. LEED Certification: Doors manufactured under guidelines of LEED to be built to USGBC standards for contributing to LEED point calculations.

F. Pre-Submittal Conference: Conduct conference in compliance with requirements in Division 01 Section "Project Meetings" with attendance by representatives of Supplier, Installer, and Contractor to review proper methods and procedures for receiving, handling, and installing flush wood doors.

1.5 DELIVERY, STORAGE, AND HANDLING

A. Comply with requirements of referenced standard and manufacturer's written instructions.

B. Package pre-finished doors individually in plastic bags or cardboard cartons and wrap bundles of doors in plastic sheeting.

C. Mark each door on top rail with opening number used on Shop Drawings.

1.6 PROJECT CONDITIONS

A. Environmental Limitations: Do not deliver or install doors until spaces are enclosed and weather tight, wet work in spaces is complete and dry, and HVAC system is operating and maintaining ambient temperature and humidity conditions at occupancy levels during the remainder of the construction period.

1.7 WARRANTY

A. Special Warranty: Manufacturer's standard form in which manufacturer agrees to repair or replace doors that fail in materials or workmanship within specified warranty period.

1. Failures include, but are not limited to, the following:

   a. Warping (bow, cup, or twist) more than 1/4 inch in a 42-by-84-inch section.
   b. Telegraphing of core construction in wood face veneers exceeding 0.01 inch in a 3-inch span.
   c. Telegraphing of core construction and delaminating of face in decorative laminate-faced doors.

2. Warranty includes installation and finishing that may be required due to repair or replacement of defective doors.

3. Warranty Period for Solid Core Interior Doors: Life of installation according to manufacturer's written warranty.

PART 2 - PRODUCTS

2.1 DOOR CONSTRUCTION – GENERAL

A. WDMA I.S.1-A Performance Grade: Extra Heavy Duty; Aesthetic Grade: Premium.

B. Fire Rated Doors: Provide construction and core specified above as needed to provide fire ratings indicated.

1. Category A Edge Construction: Provide 45, 60 and 90 minute fire rated doors edge construction with intumescent seals concealed by outer stile (Category A). Comply with specified requirements for exposed edges.

2. Category B Edge Construction: Provide 20 minute fire rated doors as Category B, with smoke and fire seals (supplied by seal manufacturer) applied to frame for 20 minute openings.

3. Pairs: Provide fire retardant stiles that are listed and labeled for applications indicated without formed steel edges and astragals. Provide stiles with concealed intumescent seals. Comply with specified requirements for exposed edges.

   a. Where required or specified, provide formed steel edges and astragals with intumescent seals. Finish steel edges and astragals with baked enamel.

C. Environmentally Responsible Doors: Provide where specified doors manufactured with the following environmentally responsible components:

1. Engineered Composite Lumber Core:

a. Certified Wood: Interior wood flush doors (including fire rated doors) to be manufactured in accordance with FSC principles and criteria for wood building component and have FSC Chain of Custody certification.
b. Low Emitting Materials: Interior wood flush doors must contain no added urea-formaldehyde resins.
c. Stiles and Rails: No added urea formaldehyde.

2.2 CORE CONSTRUCTION

A. Engineered Composite Core Wood Doors:

1. Structural Composite Lumber: Engineered hardwood composite wood products tested in accordance with WDMA I.S.1A, Testing Cellulosic Composite Materials for Use in Fenestration Products containing no added Urea Formaldehyde. Comply with minimum performance levels below:

   a. Screw Withdrawal, Face: 700 lbf (3100 N).
   b. Screw Withdrawal, Edge: 550 lbf (2440 N).

2. LEED: Meet requirements of EQ4.4.

3. Sound Transmission Class: Have an operable STC rating of 30.

4. Basis of Design: Graham EC, EC5.

B. Particleboard Core Doors:

1. Particleboard: Wood fiber based materials complying with ANSI A208.1 Particleboard standard. Grade LD-2.
2. Adhesive: Fully bonded construction using Polyurethane (PUR) glue.
3. Blocking: When through-bolted hardware is not used, provide wood blocking in particleboard core doors as follows:

   a. 5-inch (125-mm) top-rail blocking, in doors indicated to have closers.
   b. 5-inch (125-mm) mid-rail blocking, in doors indicated to have exit devices.

      1) Optional Cores for Blocking: Provide doors with either glued-wood-stave or structural-composite-lumber core instead of particleboard core for doors indicated to receive closers and exit devices.

4. Basis of Design:

   a. Graham: PC5

C. Mineral Core Doors:

1. Core: Non-combustible mineral product complying with requirements of referenced quality standard and testing and inspecting agency for fire protection rating indicated.

2. Blocking: Provide composite blocking with improved screw holding capability approved for use in doors of fire protection ratings indicated as needed to eliminate through-bolting hardware.

3. Edge Construction: At hinge stiles, provide laminated edge construction with improved screw holding capability and split resistance. Comply with specified requirements for exposed edges.

4. Basis of Design: Graham FD.

2.3 VENEERED DOORS FOR TRANSPARENT FINISH

A. Manufacturers: Subject to compliance with requirements, provide products by one of the following:

1. Eggers Industries
2. Graham
3. Algoma Hardwoods

B. Interior Solid Core Doors:

1. Grade: Premium

2. Faces: Veneer grades as noted below; veneer minimum 1/50-inch (0.5mm) thickness at moisture content of 12% or less.

   a. Rotary Sliced Select White Maple, AA grade faces.

3. Match between Veneer Leaves: Book match.

4. Assembly of Veneer Leaves on Door Faces:

   a. Balance match.

5. Pair and Set Match: Provide for doors hung in same opening or separated only by mullions.
6. Room Match: Match door faces within each separate room or area of building. Corridor door faces do not need to match where they are separated by 10 feet or more.
7. Transom Match: Continuous match.
8. Vertical Edges: Matching same species as faces. Wood or composite material, one piece, laminated, or veneered. Minimum requirements per WDMA section P-1, Performance Standards for Architectural Wood Flush Doors.
9. Horizontal Edges: Solid wood or structural composite material meeting the minimum requirements per WDMA section P-1, Performance Standards for Architectural Wood Flush Doors
10. Construction: Five plies. Stiles and rails are bonded to core, then entire unit sanded before applying face veneers.

11. At doors over 40% of the face cut-out for lights and or louvers, furnish engineered composite lumber core.

2.4 LOUVERS

A. Wood Louvers: Door manufacturer's standard solid wood louvers unless otherwise indicated.

1. Wood Species: Same species as door faces.

B. Metal Louvers: Door manufacturer's standard metal louvers unless otherwise indicated.

1. Blade Type: Vision proof inverted V or inverted Y.
2. Metal and Finish: Galvanized steel, 0.040 inch thick, factory primed for paint finish with baked enamel or powder coated finish.

C. Louvers for Fire Rated Doors: Metal louvers with fusible link and closing device, listed and labeled for use in doors with fire protection rating of 1-1/2 hours and less.

1. Manufacturers: Subject to compliance with requirements, provide door manufacturers standard louver to meet rating indicated.
2. Metal and Finish: Galvanized steel, 0.040 inch thick, factory primed for paint finish with baked enamel or powder coated finish.

2.5 LIGHT FRAMES AND GLAZING

A. Wood Beads for Light Openings in Wood Doors up to and including 20-minute rating:

1. Wood Species: Same species as door faces.
2. Profile: Manufacturer’s standard rectangular profile. At wood core doors with 20-minute fire protection ratings, provide wood beads and metal glazing clips approved for such use.

B. Metal Frames for Light Openings in Fire Rated Doors over 20-minute rating: Manufacturer's standard frame formed of 0.048-inch-thick, cold rolled steel sheet; with baked enamel or powder coated finish; and approved for use in doors of fire protection rating indicated.

C. Glazing: Comply with installation requirements in Division 08 Section "Glazing" and with the flush wood door manufacturer's written instructions.

1. Factory Glazing: Factory install glazing in doors as indicated. Doors with factory installed glass to include all of the required glazing material.

2.6 FABRICATION

A. Factory fit doors to suit frame opening sizes indicated. Comply with clearance requirements of referenced quality standard for fitting unless otherwise indicated.

1. Comply with requirements in NFPA 80 for fire rated doors.

2. Provide ½” maximum clearance above finish floor.

B. Factory machine doors for hardware that is not surface applied. Comply with final hardware schedules, door frame Shop Drawings, DHI A115-W series standards, and hardware templates.

1. Coordinate with hardware mortises in metal frames to verify dimensions and alignment before factory machining.
2. Metal Astragals: Factory machine astragals and formed steel edges for hardware for pairs of fire rated doors.

C. Transom and Side Panels: Fabricate matching panels with same construction, exposed surfaces, and finish as specified for associated doors. Finish bottom edges of transoms and top edges of rabbeted doors same as door stiles.

D. Openings: Cut and trim openings through doors in factory.

1. Light Openings: Trim openings with moldings of material and profile indicated.
2. Glazing: Comply with applicable requirements in Division 08 Section "Glazing."
3. Louvers: Factory install louvers in prepared openings.

E. Electrical Raceways: Provide flush wood doors to receive electrified hardware with concealed wiring harness and standardized Molex™ plug connectors on both ends to accommodate up to twelve wires. Coordinate connectors on end of the wiring harness to plug directly into the electrified hardware and the through wire transfer hardware or wiring harness specified in hardware sets in Division 08 "Door Hardware".

2.7 FACTORY FINISHING

A. General: Comply with referenced quality standard for factory finishing. Complete fabrication, including fitting doors for openings and machining for hardware that is not surface applied, before finishing.

1. Finish faces, all four edges, edges of cutouts, and mortises. Stains and fillers may be omitted on top and bottom edges, edges of cutouts, and mortises.

B. Transparent Finish: Provide a clear protective coating over the wood veneer allowing the natural color and grain of the selected wood species to provide the appearance specified. Stain is applied to the wood surface underneath the transparent finish to add color and design flexibility.

1. Grade: Premium.
2. Finish: Meet or exceed WDMA I.S. 1A TR6 Catalyzed Polyurethane finish performance requirements.
3. Staining: As selected by Architect from manufacturer's full range.
4. Sheen: Satin.

PART 3 - EXECUTION

3.1 EXAMINATION

A. Examine doors and installed door frames before hanging doors.

1. Verify that frames comply with indicated requirements for type, size, location, and swing characteristics and have been installed with level heads and plumb jambs.
2. Reject doors with defects.

B. Proceed with installation only after unsatisfactory conditions have been corrected.

3.2 INSTALLATION

A. Hardware: For installation, see Division 8 Section "Door Hardware."

B. Installation Instructions: Install doors to comply with manufacturer's written instructions and the referenced quality standard, and as indicated.

1. Install fire rated doors in corresponding fire rated frames according to NFPA 80.

C. Factory Fitted Doors: Align in frames for uniform clearance at each edge.

D. Factory Finished Doors: Restore finish before installation if fitting or machining is required at Project site.

3.3 ADJUSTING

A. Operation: Re-hang or replace doors that do not swing or operate freely.

B. Finished Doors: Replace doors that do not comply with requirements. Doors may be repaired or refinished if work complies with requirements and shows no evidence of repair or refinishing.

END OF SECTION 081416

SECTION 083113 - ACCESS DOORS AND FRAMES

PART 1 - GENERAL

1.1 RELATED DOCUMENTS

A. Drawings and general provisions of the Contract, including General and Supplementary Conditions and Division 01 Specification Sections, apply to this Section.

1.2 SUMMARY

A. Section Includes:

1. Access doors and frames for walls and ceilings.
2. Floor access doors and frames.

B. Related Requirements:

1. Section 077200 "Roof Accessories" for roof hatches.
2. Section 233300 "Air Duct Accessories" for heating and air-conditioning duct access doors.

1.3 ACTION SUBMITTALS

A. Product Data: For each type of product.

1. Include construction details, fire ratings, materials, individual components and profiles, and finishes.

B. Shop Drawings:

1. Include plans, elevations, sections, details, and attachments to other work.
2. Detail fabrication and installation of access doors and frames for each type of substrate.

C. Samples: For each door face material, at least 3 by 5 inches in size, in specified finish.

D. Product Schedule: Provide complete access door and frame schedule, including types, locations, sizes, latching or locking provisions, and other data pertinent to installation.

1.4 PRODUCT HANDLING

A. All materials shall be delivered in manufacturer’s original packaging.

B. Store materials in a dry, protected, well-vented area. The contractor shall thoroughly inspect product upon receipt and report damaged material immediately to delivering carrier and note such damage on the carrier’s freight bill of lading.

1.5 JOB CONDITIONS

A. Verify that other trades with related work are complete before installing access door(s).

B. Mounting surfaces shall be straight and secure; substrates shall be of proper width.

C. Refer to the construction documents, shop drawings, and manufacturer's installation instructions.

D. Observe all appropriate OSHA safety guidelines for this work.

1.6 WARRANTY

A. Manufacturer's Standard Warranty: Materials shall be free of defects in material and workmanship for a period of five (5) years from the date of purchase. Should a part fail to function in normal use within this period, manufacturer shall furnish a new part at no charge. Electrical motors, special finishes, and other special equipment (if applicable) shall be warranted separately by the manufacturers of those products.

PART 2 - PRODUCTS

2.1 PERFORMANCE REQUIREMENTS

A. Fire-Rated Access Doors and Frames: Units complying with NFPA 80 that are identical to access door and frame assemblies tested for fire-test-response characteristics according to the following test method and that are listed and labeled by UL or another testing and inspecting agency acceptable to authorities having jurisdiction:

1. NFPA 252 or UL 10B for fire-rated access door assemblies installed vertically.
2. NFPA 288 and E119 for fire-rated access door assemblies installed horizontally.

2.2 ACCESS DOORS AND FRAMES FOR WALLS AND CEILINGS

A. Basis-of-Design Product:

1. J. L. Industries, Inc.; Div. of Activar Construction Products Group

B. Manufacturers: Subject to compliance with requirements, available manufacturers offering products that may be incorporated into the Work include, but are not limited to, the following

1. Babcock-Davis
2. Larsen's Manufacturing Company
3. Milcor Inc.
4. Substitutions: Under provisions of Section 012500 "Substitution Procedures".

C. Source Limitations: Obtain each type of access door and frame from single source from single manufacturer.

D. Flush Access Doors with Exposed Flanges:

1. Basis-of-Design Product: **Model TM**.
2. Assembly Description: Fabricate door to fit flush to frame. Provide manufacturer's standard-width exposed flange, proportional to door size.
3. Locations: Wall and ceiling.
4. Uncoated Steel Sheet for Door: Nominal 0.060 inch, 16 gage.

a. Finish: Factory prime.

5. Frame Material: Same material, thickness, and finish as door.
6. Hinges: Continuous piano.
7. Hardware: Latch.

E. Fire-Rated, Flush Access Doors with Exposed Flanges:

1. Basis-of-Design Product: **Model FD**.
2. Assembly Description: Fabricate door to fit flush to frame, with a core of mineral-fiber insulation enclosed in sheet metal. Provide self-latching door with automatic closer and interior latch release. Provide manufacturer's standard-width exposed flange, proportional to door size.
3. Locations: Wall and ceiling.
4. Fire-Resistance Rating: Not less than that of adjacent construction.
5. Uncoated Steel Sheet for Door: Nominal 0.036 inch, 20 gage.

a. Finish: Factory prime.

6. Frame Material: Same material and finish as door, 16 gage thickness.
7. Hinges: Manufacturer's standard.
8. Hardware: Latch.

F. Hardware:

1. Latch:

a. Cam latch operated by screwdriver for non-rated doors.
b. Slam latch operated by ring turn with interior release.

2.3 FLOOR ACCESS DOORS AND FRAMES

A. Basis-of-Design Product: Subject to compliance with requirements, provide product indicated or comparable product by one (1) of the following:

1. Bilco Company (The); **Type FR Fire Rated**

B. Manufacturers: Subject to compliance with requirements, available manufacturers offering products that may be incorporated into the Work include, but are not limited to, the following:

1. Babcock-Davis.
2. MIFAB, Inc.
3. Milcor Inc.
4. Substitutions: Under provisions of Section 012500 “Substitution Procedures”.

C. Floor Doors, General: Equip each door with adjustable counterbalancing springs, heavy-duty hold-open arm that automatically locks door open at 90 degrees, release handle with red vinyl grip that allows for one-handed closure, and recessed lift handle.

D. Aluminum Floor Door: Single-leaf opening, pre-assembled; nonwatertight; loading capacity to support 150-lbf/sq. ft. pedestrian live load.

1. Cover: Shall have a 1 inch fillable pan to receive concrete as indicated in Section 033100.
2. Frame: Shall be ¼ inch extruded aluminum with full anchor flange around the perimeter.

E. Hardware: Provide the following:

1. Hinges: Heavy-duty, stainless-steel continuous hinge with stainless-steel pins.
2. Latch: Stainless-steel slam latch.
3. Lock: Stainless-steel snap lock with fixed handle.
4. Hardware Material: Manufacturer's standard.

F. Safety Railing System: Manufacturer's standard system including rails, clamps, fasteners, safety barrier at railing opening, and accessories required for a complete installation; attached to access door and complying with 29 CFR 1910.23 requirements and authorities having jurisdiction.

1. Height: 42 inches above finished roof deck.
2. Posts and Rails: Galvanized-steel pipe, 1¼ inches in diameter or galvanized-steel tube, 1-5/8 inches in diameter.
3. Flat Bar: Galvanized steel, 2 inches high by 3/8 inch thick.
4. Maximum Opening Size: System constructed to prevent passage of a sphere 21 inches in diameter.
5. Self-Latching Gate: Fabricated of same materials and rail spacing as safety railing system. Provide manufacturer's standard hinges and self-latching mechanism.
6. Post and Rail Tops and Ends: Weather resistant, closed or plugged with prefabricated end fittings.
7. Provide weep holes or another means to drain entrapped water in hollow sections of handrail and railing members.
8. Fabricate joints exposed to weather to be watertight.
9. Fasteners: Manufacturer's standard, finished to match railing system.
10. Finish: Manufacturer's standard baked enamel or powder coat.

    a. Color: As selected by Architect and Owner from manufacturer's full range.

G. Ladder-Assist Post: Manufacturer's standard device for attachment to access ladder.

1. Operation: Post locks in place on full extension; release mechanism returns post to closed position.
2. Height: 42 inches above finished deck.
3. Material: Hot-dip galvanized steel tube.
4. Post: 1-5/8-inch-diameter pipe.
5. Finish: Manufacturer's standard baked enamel or powder coat.

    a. Color: As selected by Architect and Owner from manufacturer's full range.

2.4 MATERIALS

A. Steel Plates, Shapes, and Bars: ASTM A 36.

B. Steel Sheet: Uncoated or electrolytic zinc coated, ASTM A 879, with cold-rolled steel sheet substrate complying with ASTM A 1008, Commercial Steel (CS), exposed.

C. Aluminum Extrusions: ASTM B 221, Alloy 6063-T6.

D. Aluminum Sheet: ASTM B 209, alloy and temper recommended by aluminum producer and finisher for type of use and finish indicated, and with not less than strength and durability properties of Alloy 5005-H15; with minimum sheet thickness according to ANSI H35.2.

E. Frame Anchors: Same type as door face.

F. Inserts, Bolts, and Anchor Fasteners: Hot-dip galvanized steel according to ASTM A 153 or ASTM F 2329.

2.5 FABRICATION

A. General: Provide access door and frame assemblies manufactured as integral units ready for installation.

B. Metal Surfaces: For metal surfaces exposed to view in the completed Work, provide materials with smooth, flat surfaces without blemishes. Do not use materials with exposed pitting, seam marks, roller marks, rolled trade names, or roughness.

C. Doors and Frames: Grind exposed welds smooth and flush with adjacent surfaces. Furnish attachment devices and fasteners of type required to secure access doors to types of supports indicated.

1. Provide mounting holes in frames for attachment of units to metal or wood framing.
2. Provide mounting holes in frame for attachment of masonry anchors.

D. Latching Mechanisms: Furnish number required to hold doors in flush, smooth plane when closed.

1. For cylinder locks, furnish two keys per lock and key all locks alike.

E. Extruded Aluminum: After fabrication, apply manufacturer's standard protective coating on aluminum that will come in contact with concrete.

2.6 FINISHES

A. Comply with NAAMM's "Metal Finishes Manual for Architectural and Metal Products" for recommendations for applying and designating finishes.

B. Protect mechanical finishes on exposed surfaces from damage by applying a strippable, temporary protective covering before shipping.

C. Appearance of Finished Work: Noticeable variations in same piece are not acceptable. Variations in appearance of adjoining components are acceptable if they are within the range of approved Samples and are assembled or installed to minimize contrast.

D. Steel and Metallic-Coated-Steel Finishes:

1. Factory Prime: Apply manufacturer's standard, fast-curing, lead- and chromate-free, universal primer immediately after surface preparation and pretreatment.

E. Aluminum Finishes:

1. Mill finish.

PART 3 - EXECUTION

3.1 EXAMINATION

A. Examine substrates for compliance with requirements for installation tolerances and other conditions affecting performance of the Work.

B. Proceed with installation only after unsatisfactory conditions have been corrected.

3.2 INSTALLATION

A. Comply with manufacturer's written instructions for installing access doors and frames.

B. Install doors flush with adjacent finish surfaces or recessed to receive finish material.

3.3 ADJUSTING

A. Adjust doors and hardware, after installation, for proper operation.

B. Remove and replace doors and frames that are warped, bowed, or otherwise damaged.

END OF SECTION 083113

SECTION 083313 - COILING COUNTER DOORS

PART 1 - GENERAL

1.1 RELATED DOCUMENTS

A. Drawings and general provisions of the Contract, including General and Supplementary Conditions and Division 01 Specification Sections, apply to this Section.

1.2 SUMMARY

A. Section Includes:

1. Counter doors.
2. Fire-rated counter doors.

B. Related Requirements:

1. Section 055000 "Metal Fabrications" for miscellaneous steel supports.
2. Section 099123 "Interior Painting" for finish painting of factory-primed doors.

1.3 ACTION SUBMITTALS

A. Product Data: For each type and size of coiling counter door and accessory.

1. Include construction details, material descriptions, dimensions of individual components, profiles for slats, and finishes.
2. Include rated capacities, operating characteristics, electrical characteristics, and furnished accessories.
3. Include description of automatic closing device and testing and resetting instructions.

B. Shop Drawings: For each installation and for special components not dimensioned or detailed in manufacturer's product data.

1. Include plans, elevations, sections, and mounting details.
2. Include details of equipment assemblies, and indicate dimensions, required clearances, method of field assembly, components, and location and size of each field connection.
3. Include points of attachment and their corresponding static and dynamic loads imposed on structure.
4. Show locations of controls, locking devices, detectors or replaceable fusible links, and other accessories.
5. Include diagrams for power, signal, and control wiring.

C. Samples for Initial Selection: Manufacturer's finish charts showing full range of colors and textures available for units with factory-applied finishes.

1. Include similar Samples of accessories involving color selection.

D. Samples for Verification: For each type of exposed finish on the following components, in manufacturer's standard sizes:

1. Curtain slats[**, including full vision window secured to slat**].
2. Bottom bar[**with sensor edge**].
3. Guides.
4. Brackets.
5. Hood.
6. Laminate-clad counter panel product for each type, color, pattern, and surface finish; laminated to core.
7. Locking device(s).
8. Include similar Samples of accessories involving color selection.

1.4 INFORMATIONAL SUBMITTALS

A. Qualification Data: For Installer.

B. Oversize Construction Certification: For door assemblies required to be fire-rated and that exceed size limitations of labeled assemblies.

1.5 CLOSEOUT SUBMITTALS

A. Maintenance Data: For coiling counter doors to include in maintenance manuals.

1.6 QUALITY ASSURANCE

A. Installer Qualifications: An entity that employs installers and supervisors who are trained and approved by manufacturer for both installation and maintenance of units required for this Project.

1. Maintenance Proximity: Not more than [**two**] <**Insert number**> hours' normal travel time from Installer's place of business to Project site.

B. Fire-Rated Door Assemblies: Assemblies complying with NFPA 80 that are listed and labeled by a qualified testing agency, for fire-protection ratings indicated, based on testing at as close to neutral pressure as possible according to [**NFPA 252**] [**or**] [**UL 10B**].

1. Oversize Fire-Rated Door Assemblies: For units exceeding sizes of tested assemblies, provide certification by a qualified testing agency that doors comply with standard construction requirements for tested and labeled fire-rated door assemblies except for size.
2. Temperature-Rise Limit: [**Where indicated**] [**At exit enclosures and exit passageways**], provide doors that have a maximum transmitted temperature end point of not more than 450 deg F (250 deg C) above ambient after 30 minutes of standard fire-test exposure.
3. Smoke Control: [**Where indicated**] [**In corridors and smoke barriers**], provide doors that are listed and labeled with the letter "S" on the fire-rating label by a qualified testing agency for smoke- and draft-control based on testing according to UL 1784; with

maximum air-leakage rate of 3.0 cfm/sq. ft. (0.01524 cu. m/s x sq. m) of door opening at 0.10-inch wg (24.9 Pa) for both ambient and elevated temperature tests.

C. Sound-Control Doors: Assemblies tested in a laboratory for sound-transmission-loss performance according to ASTM E 90, calculated according to ASTM E 413, and rated for not less than the STC value indicated.

PART 2 - PRODUCTS

2.1 MANUFACTURERS, GENERAL

A. Source Limitations: Obtain coiling counter doors from single source from single manufacturer.

1. Obtain operators and controls from coiling counter door manufacturer.

2.2 COUNTER DOOR ASSEMBLY <**Insert drawing designation**>

A. Counter Door: Coiling counter door formed with curtain of interlocking metal slats.

1. Manufacturers: Subject to compliance with requirements, [**provide products by the following**] [**provide products by one of the following**] [**available manufacturers offering products that may be incorporated into the Work include, but are not limited to, the following**]:
2. Basis-of-Design Product: Subject to compliance with requirements, provide [**product indicated on Drawings**] <**Insert manufacturer's name; product name or designation**> or comparable product by one of the following:

   a. ACME Rolling Doors.
   b. Alpine Overhead Doors, Inc.
   c. Alumatec Pacific Products.
   d. Amarr Garage Doors.
   e. C.H.I. Overhead Doors.
   f. City-Gates.
   g. Clopay Building Products.
   h. Cookson Company.
   i. Cornell Iron Works, Inc.
   j. Lawrence Roll-Up Doors, Inc.
   k. McKeon Rolling Steel Door Company, Inc.
   l. Metro Door.
   m. Overhead Door Corporation.
   n. QMI Security Solutions.
   o. Raynor.
   p. Wayne-Dalton Corp.
   q. <**Insert manufacturer's name**>.

B. Operation Cycles: Door components and operators capable of operating for not less than [**10,000**] [**20,000**] [**50,000**] [**100,000**] [**200,000**] <**Insert number**>. One operation cycle is

complete when a door is opened from the closed position to the fully open position and returned to the closed position.

1. Include tamperproof cycle counter.

C. STC Rating: [**26**] <**Insert value**>.

D. Curtain R-Value: [**4.5 deg F x h x sq. ft./Btu (0.792 K x sq. m/W)**] [**5.0 deg F x h x sq. ft./Btu (0.881 K x sq. m/W)**] [**6.0 deg F x h x sq. ft./Btu (1.057 K x sq. m/W)**] <**Insert value**>.

E. Door Curtain Material: [**Galvanized steel**] [**Stainless steel**] [**Aluminum**].

F. Door Curtain Slats: [**Curved**] [**Flat**] profile slats of [**1-1/4-inch (32-mm)**] [**1-1/2-inch (38-mm)**] <**Insert dimension**> center-to-center height.

1. Perforated Slats: Approximately [**1/16-inch (1.6-mm) pinholes**] [**3/32-inch (2.4-mm) pinholes**] [**7/8-inch- (22-mm-) wide by 3/8-inch- (10-mm-) high slots**] <**Insert dimensions**>.
2. Fenestrated Slats: Approximately [**3- by 5/8-inch (76- by 16-mm)**] [**4- by 5/8-inch (102- by 16-mm)**] [**10- by 1-5/8-inch (254- by 41-mm)**] <**Insert dimensions**> openings spaced approximately [**1-1/2 inches (38 mm)**] <**Insert dimension**> apart and beginning 12 inches (305 mm) from jamb guides.
3. Vision Panels: Approximately 10- by 1-5/8-inch (254- by 41-mm) openings spaced approximately 2 inches (51 mm) apart and beginning 12 inches (305 mm) from end guides; in [**two**] [**three**] <**Insert number**> rows of slats at height indicated on Drawings; installed with[**insulated**] vision-panel glazing.
4. Insulated-Slat Interior Facing: [**Metal**] [**Plastic**].
5. Gasket Seal. Manufacturer's standard continuous gaskets between slats.

G. Bottom Bar: Manufacturer's standard continuous channel or tubular shape, fabricated [**hot-dip galvanized steel**] [**stainless steel**] [**or**] [**aluminum extrusion**] and finished [**to match door**] <**Insert requirement**>.

H. Curtain Jamb Guides: [**Galvanized steel**] [**Stainless steel**] [**Aluminum**] with exposed finish matching curtain slats.[**Provide continuous integral wear strips to prevent metal-to-metal contact and to minimize operational noise.**][**Provide removable post(s) and jamb guides where shown on Drawings.**]

I. Hood: [**Match curtain material and finish**] [**Galvanized steel**] [**Stainless steel**] [**Aluminum**].

1. Shape: [**Round**] [**Square**] [**As shown on Drawings**] <**Insert shape**>.
2. Mounting: [**Face of wall**] [**Between jambs**] [**As shown on Drawings**].

J. Integral Frame, Hood, and Fascia: [**Galvanized**] [**Stainless**] steel.

1. Mounting: [**Face of wall**] [**Between jambs**] [**As shown on Drawings**].

K. Sill Configuration: [**No sill**] [**Integral metal sill**].

L. Locking Devices: Equip door with [**slide bolt for padlock**] [**locking device assembly**] [**and**] [**chain lock keeper**].

1. Locking Device Assembly: [**Single-jamb side**] [**Cremone type, both jamb sides**] locking bars, operable from [**inside with thumb turn**] [**outside with cylinder**] [**outside only, with cylinder**] [**inside and outside with cylinders**] <**Insert requirement**>.

M. Manual Door Operator: [**Push-up operation**] [**Chain-hoist operator**] [**Manufacturer's standard crank operator**] [**Awning-crank operator**].

1. Provide operator with through-wall shaft operation.
2. Provide operator with manufacturer's standard removable operating arm.

N. Electric Door Operator:

1. Usage Classification: [**Heavy duty, 25 or more cycles per hour and over 90 cycles per day**] [**Standard duty, up to 25 cycles per hour and up to 90 cycles per day**] [**Medium duty, up to 12 cycles per hour and up to 50 cycles per day**] [**Light duty, up to 10 cycles per hour**] <**Insert classification**>.
2. Operator Location: [**Top of hood**] [**Front of hood**] [**Wall**] [**Bench**] [**Through wall**] [**As shown on Drawings**].
3. Motor Exposure: [**Interior**] [**Exterior, wet, and humid**].
4. Emergency Manual Operation: [**Push-up**] [**Chain**] [**Crank**] type.
5. Obstruction-Detection Device: Automatic [**photoelectric sensor**] [**electric sensor edge on bottom bar**] [**pneumatic sensor edge on bottom bar**] [**; self-monitoring type**] <**Insert type**>.

   a. Sensor Edge Bulb Color: [**Black**] [**As selected by Architect from manufacturer's full range**] <**Insert color**>.

6. Control Station(s): [**Interior-side mounted**] [**Exterior-side-mounted**] [**Where shown on Drawings**] <**Insert location**>.
7. Other Equipment: <**Insert device**>.

O. Curtain Accessories: Equip door with [**smoke seals**] [**weatherseals**] [**astragal**] [**push/pull handles**] [**pull-down strap**] [**poll hook**] [**and**] [**automatic closing device**] <**Insert item**>.

P. Door Finish:

1. Aluminum Finish: [**Mill**] [**Clear anodized**] [**Light bronze anodized**] [**Medium bronze anodized**] [**Dark bronze anodized**] [**Black anodized**] [**Anodized color matching Architect's sample**] [**Anodized color as selected by Architect from full range of industry colors and color densities**] <**Insert color**>.
2. Baked-Enamel or Powder-Coated Finish: [**Color as indicated by manufacturer's designations**] [**Color matching Architect's sample**] [**Color as selected by Architect from manufacturer's full range**] <**Insert color**>.
3. Factory Prime Finish: Manufacturer's standard color.
4. Stainless-Steel Finish: [**No. 2B (bright, cold rolled)**] [**No. 4 (polished directional satin)**] <**Insert finish**>.
5. Interior Curtain-Slat Facing: [**Match finish of exterior curtain-slat face**] [**PVC plastic**] <**Insert finish**>.

2.3 FIRE-RATED COUNTER DOOR ASSEMBLY <**Insert drawing designation**>

A. Fire-Rated Counter Door: Overhead fire-rated coiling door formed with curtain of interlocking metal slats.

1. Manufacturers: Subject to compliance with requirements, [**provide products by the following**] [**provide products by one of the following**] [**available manufacturers offering products that may be incorporated into the Work include, but are not limited to, the following**]:
2. Basis-of-Design Product: Subject to compliance with requirements, provide [**product indicated on Drawings**] <**Insert manufacturer's name; product name or designation**> or comparable product by one of the following:

a. ACME Rolling Doors.
b. Alpine Overhead Doors, Inc.
c. Amarr Garage Doors.
d. C.H.I. Overhead Doors.
e. City-Gates.
f. Clopay Building Products.
g. Cookson Company.
h. Cornell Iron Works, Inc.
i. Lawrence Roll-Up Doors, Inc.
j. McKeon Rolling Steel Door Company, Inc.
k. Overhead Door Corporation.
l. Raynor.
m. Wayne-Dalton Corp.
n. <**Insert manufacturer's name**>.

B. Operation Cycles: Door components and operators capable of operating for not less than [**10,000**] [**20,000**] [**50,000**] [**100,000**] [**200,000**] <**Insert number**>. One operation cycle is complete when a door is opened from the closed position to the fully open position and returned to the closed position.

1. Include tamperproof cycle counter.

C. Fire Rating: [**3/4 hour**] [**1 hour**] [**1-1/2 hours**] [**3 hours**] [**4 hours**] [**with temperature-rise limit**] [**and**] [**with smoke control**].

D. STC Rating: [**27**] <**Insert value**>.

E. Curtain R-Value: [**4.5 deg F x h x sq. ft./Btu (0.792 K x sq. m/W)**] [**5.0 deg F x h x sq. ft./Btu (0.881 K x sq. m/W)**] [**6.0 deg F x h x sq. ft./Btu (1.057 K x sq. m/W)**] <**Insert value**>.

F. Door Curtain Material: [**Galvanized**] [**Stainless**] steel.

G. Door Curtain Slats: [**Curved**] [**Flat**] profile slats of [**1-1/4-inch (32-mm)**] [**1-1/2-inch (38-mm)**] <**Insert dimension**> center-to-center height.

1. Vision Panels: Approximately 10- by 1-5/8-inch (254- by 41-mm) openings spaced approximately 2 inches (51 mm) apart and beginning 12 inches (305 mm) from end

guides; in [**two**] [**three**] <**Insert number**> rows of slats at height indicated on Drawings; installed with fire-rated vision-panel glazing.

2. Insulated-Slat Interior Facing: Metal.

H. Curtain Jamb Guides: [**Galvanized**] [**Stainless**] steel with exposed finish matching curtain slats.

I. Hood: [**Match curtain material and finish**] [**Galvanized steel**] [**Stainless steel**].

1. Shape: [**Round**] [**Square**] [**As shown on Drawings**] <**Insert shape**>.
2. Mounting: [**Face of wall**] [**Between jambs**] [**As shown on Drawings**].

J. Integral Frame, Hood, and Fascia: [**Galvanized**] [**Stainless**] steel.

1. Mounting: [**Face of wall**] [**Between jambs**] [**As shown on Drawings**].

K. Sill Configuration: [**No sill**] [**Integral metal sill**] [**Fire-rated, laminate counter**].

1. High-Pressure Decorative Laminate: Match color, pattern, and finish [**as indicated by manufacturer's designations**] [**of Architect's sample**] [**as selected by Architect from manufacturer's full range**] <**Insert requirement**>.

L. Locking Devices: Equip door with [**slide bolt for padlock**] [**locking device assembly**] [**and**] [**chain lock keeper**].

1. Locking Device Assembly: [**Single-jamb side**] [**Cremone type, both jamb sides**] locking bars, operable from [**inside with thumbturn**] [**outside with cylinder**] [**outside only, with cylinder**] [**inside and outside with cylinders**] <**Insert requirement**>.

M. Manual Door Operator: [**Push-up operation**] [**Chain-hoist operator**] [**Manufacturer's standard crank operator**] [**Awning-crank operator**].

1. Provide operator with through-wall shaft operation.
2. Provide operator with manufacturer's standard removable operating arm.

N. Electric Door Operator:

1. Usage Classification: [**Heavy duty, 25 or more cycles per hour and over 90 cycles per day**] [**Standard duty, up to 25 cycles per hour and up to 90 cycles per day**] [**Medium duty, up to 12 cycles per hour and up to 50 cycles per day**] [**Light duty, up to 10 cycles per hour**] <**Insert classification**>.
2. Operator Location: [**Top of hood**] [**Front of hood**] [**Wall**] [**Bench**] [**Through wall**] [**As shown on Drawings**].
3. Motor Exposure: [**Interior**] [**Exterior, wet, and humid**].
4. Emergency Manual Operation: [**Push-up**] [**Chain**] [**Crank**] type.
5. Obstruction Detection Device: Automatic [**photoelectric sensor**] [**electric sensor edge on bottom bar**] [**pneumatic sensor edge on bottom bar**] [**; self-monitoring type**] <**Insert type**>.

   a. Sensor Edge Bulb Color: [**Black**] [**As selected by Architect from manufacturer's full range**] <**Insert color**>.

6. Control Station(s): [**Interior-side mounted**] [**Exterior-side mounted**] [**Where shown on Drawings**] <**Insert location**>.
7. Other Equipment: <**Insert device**>.

O. Curtain Accessories: Equip door with smoke seals, automatic closing device, [**astragal**] [**push/pull handles**] [**pull-down strap**] [**poll hook**] [**and**] <**Insert item**>.

P. Door Finish:

1. Baked-Enamel or Powder-Coated Finish: [**Color as indicated by manufacturer's designations**] [**Color matching Architect's sample**] [**Color as selected by Architect from manufacturer's full range**] <**Insert color**>.
2. Factory Prime Finish: Manufacturer's standard color.
3. Stainless-Steel Finish: [**No. 2B (bright, cold rolled)**] [**No. 4 (polished directional satin)**] <**Insert finish**>.
4. Interior Curtain-Slat Facing: [**Match finish of exterior curtain-slat face**] <**Insert finish**>.

2.4 MATERIALS, GENERAL

A. Electrical Components, Devices, and Accessories: Listed and labeled as defined in NFPA 70, by a qualified testing agency, and marked for intended location and application.

2.5 DOOR CURTAIN MATERIALS AND CONSTRUCTION

A. Door Curtains: Fabricate coiling counter-door curtain of interlocking metal slats in a continuous length for width of door without splices. Unless otherwise indicated, provide slats of thickness and mechanical properties recommended by door manufacturer for performance, size, and type of door indicated, and as follows:

1. Steel Door Curtain Slats: Zinc-coated (galvanized), cold-rolled structural steel sheet; complying with ASTM A 653/A 653M, with G90 (Z275) zinc coating; nominal sheet thickness (coated) of 0.028 inch (0.71 mm); and as required.
2. Stainless-Steel Door Curtain Slats: ASTM A 666, Type 304; sheet thickness of 0.025 inch (0.64 mm); and as required.
3. Aluminum Door Curtain Slats: ASTM B 209 (ASTM B 209M) sheet or ASTM B 221 (ASTM B 221M) extrusions, alloy and temper standard with manufacturer for type of use and finish indicated; thickness of 0.050 inch (1.27 mm); and as required.
4. Vision-Panel Glazing: Manufacturer's standard clear glazing, fabricated from transparent acrylic sheet or fire-protection rated glass as required for type of door; set in glazing channel secured to curtain slats.
5. Insulation: Fill slats for insulated doors with manufacturer's standard thermal insulation complying with maximum flame-spread and smoke-developed indexes of 75 and 450, respectively, according to ASTM E 84 or UL 723. Enclose insulation completely within slat faces.
6. Metal Interior Curtain-Slat Facing: Match metal of exterior curtain-slat face.
7. Plastic Interior Curtain-Slat Facing: Extruded PVC plastic with maximum flame-spread index of [**25**] [**75**] [**200**] and smoke-developed index of 450, according to ASTM E 84 or UL 723.

B. Curtain Jamb Guides: Manufacturer's standard angles or channels and angles of same material and finish as curtain slats unless otherwise indicated, with sufficient depth and strength to retain curtain, to allow curtain to operate smoothly, and to withstand loading. Slot bolt holes for guide adjustment. Provide removable stops on guides to prevent overtravel of curtain.

1. Removable Posts and Jamb Guides: Manufacturer's standard.

2.6 HOODS

A. General: Form sheet metal hood to entirely enclose coiled curtain and operating mechanism at opening head. Contour to fit end brackets to which hood is attached. Roll and reinforce top and bottom edges for stiffness. Form closed ends for surface-mounted hoods and fascia for any portion of between-jamb mounting that projects beyond wall face. Equip hood with intermediate support brackets as required to prevent sagging.

1. Galvanized Steel: Nominal 0.028-inch- (0.71-mm-) thick, hot-dip galvanized steel sheet with G90 (Z275) zinc coating, complying with ASTM A 653/A 653M.
2. Stainless Steel: 0.025-inch- (0.64-mm-) thick stainless-steel sheet, Type 304, complying with ASTM A 666.
3. Aluminum: 0.040-inch- (1.02-mm-) thick aluminum sheet complying with ASTM B 209 (ASTM B 209M), of alloy and temper recommended by manufacturer and finisher for type of use and finish indicated.
4. Include automatic drop baffle on fire-rated doors to guard against passage of smoke or flame.

B. Integral Frame, Hood, and Fascia: Welded sheet metal assembly of the following sheet metal(s):

1. Galvanized Steel: Hot-dip galvanized steel sheet with G90 (Z275) zinc coating, complying with ASTM A 653/A 653M.
2. Stainless Steel: Type 304, complying with ASTM A 666.

2.7 LOCKING DEVICES

A. Slide Bolt: Fabricate with side-locking bolts to engage through slots in tracks for locking by padlock, located on both left and right jamb sides, operable from coil side.

B. Locking Device Assembly: Fabricate with cylinder lock, spring-loaded dead bolt, operating handle, cam plate, and adjustable locking bars to engage through slots in tracks.

1. Lock Cylinders: Cylinders [**specified in Section 087100 "Door Hardware"**] [**specified in Section 087111 "Door Hardware (Descriptive Specification)"**] [**standard with manufacturer**] [**and keyed to building keying system**].
2. Keys: [**Two**] [**Three**] <**Insert number**> for each cylinder.

C. Chain Lock Keeper: Suitable for padlock.

D. Safety Interlock Switch: Equip power-operated doors with safety interlock switch to disengage power supply when door is locked.

2.8 CURTAIN ACCESSORIES

A. Smoke Seals: Equip each fire-rated door with replaceable smoke-seal perimeter gaskets or brushes for smoke and draft control as required for door listing and labeling by a qualified testing agency.

B. Weatherseals: Equip door with weather-stripping gaskets fitted to entire perimeter of door for air-resistant installation unless otherwise indicated.

1. At door head, use 1/8-inch- (3-mm-) thick, replaceable, continuous-sheet baffle secured to inside of hood or field- installed on the header.
2. At door jambs, use replaceable, adjustable, continuous, [**flexible, 1/8-inch- (3-mm-) thick seals of flexible vinyl, rubber, or neoprene**] [**nylon brushes**] <**Insert material**>.

C. Astragal: Equip each door bottom bar with a replaceable, adjustable, continuous, compressible gasket of flexible vinyl, rubber, or neoprene as a cushion bumper.

D. Push/Pull Handles: Equip each push-up-operated or emergency-operated door with lifting handles on each side of door, finished to match door.

E. Pull-Down Strap: Provide pull-down straps for doors more than 84 inches (2130 mm) high.

F. Poll Hooks: Provide pole hooks and poles for doors more than 84 inches (2130 mm) high.

G. Automatic-Closing Device: Equip each fire-rated door with an automatic-closing device or holder-release mechanism and governor unit complying with NFPA 80 and an easily tested and reset release mechanism.[**Testing for manually operated doors shall allow resetting by opening the door without retensioning the counterbalancing mechanism.**][**Release mechanism for motor-operated doors shall allow testing without mechanical release of the door.**] Automatic-closing device shall be designed for activation by the following:

1. Replaceable fusible links with temperature rise and melting point of [**165 deg F (74 deg C)**] <**Insert temperature**> interconnected and mounted on both sides of door opening.
2. Manufacturer's standard UL-labeled smoke detector and door-holder-release devices.
3. Manufacturer's standard UL-labeled heat detector and door-holder-release devices.
4. Building fire-detection, smoke-detection, and -alarm systems.

2.9 COUNTER DOOR ACCESSORIES

A. Integral Metal Sill: Fabricate sills as integral part of frame assembly of Type 304 stainless steel in manufacturer's standard thickness with [**No. 4**] <**Insert finish**> finish.

B. Fire-Rated, Laminate Counter: Fire-door manufacturer's high-pressure decorative laminate-covered countertop, UL or ITS tested and labeled for 1-1/2-hour fire rating for approved use with fire-door assembly.

2.10 COUNTERBALANCING MECHANISM

A. General: Counterbalance doors by means of manufacturer's standard mechanism with an adjustable-tension, steel helical torsion spring mounted around a steel shaft and contained in a spring barrel connected to top of curtain with barrel rings. Use grease-sealed bearings or self-lubricating graphite bearings for rotating members.

B. Counterbalance Barrel: Fabricate spring barrel of manufacturer's standard hot-formed, structural-quality, [**seamless**] [**or**] [**welded**] carbon-steel pipe, of sufficient diameter and wall thickness to support rolled-up curtain without distortion of slats and to limit barrel deflection to not more than 0.03 in./ft. (2.5 mm/m) of span under full load.

C. Counterbalance Spring: One or more oil-tempered, heat-treated steel helical torsion springs. Size springs to counterbalance weight of curtain, with uniform adjustment accessible from outside barrel. Secure ends of springs to barrel and shaft with cast-steel barrel plugs.

1. Fire-Rated Doors: Equip with auxiliary counterbalance spring and prevent tension release from main counterbalance spring when automatic closing device operates.

D. Torsion Rod for Counterbalance Shaft: Fabricate of manufacturer's standard cold-rolled steel, sized to hold fixed spring ends and carry torsional load.

E. Brackets: Manufacturer's standard mounting brackets of either cast iron or cold-rolled steel plate.

2.11 MANUAL DOOR OPERATORS

A. General: Equip door with manual door operator by door manufacturer.

B. Push-up Door Operation: Design counterbalance mechanism so that required lift or pull for door operation does not exceed [**25 lbf (111 N)**] <**Insert value**>.

C. Chain-Hoist Operator: Consisting of endless steel hand chain, chain-pocket wheel and guard, and gear-reduction unit with a maximum [**25-lbf (111-N)**] [**30-lbf (133-N)**] <**Insert value**> force for door operation. Provide alloy-steel hand chain with chain holder secured to operator guide.

D. Crank Operator: Consisting of crank and crank gearbox, steel crank drive shaft, and gear-reduction unit, of type indicated. Size gears to require not more than [**25-lbf (111-N)**] [**30-lbf (133-N)**] <**Insert value**> force to turn crank. Fabricate gearbox to be oil tight and to completely enclose operating mechanism. Provide manufacturer's standard crank-locking device.

2.12 ELECTRIC DOOR OPERATORS

A. General: Electric door operator assembly of size and capacity recommended and provided by door manufacturer for door and operation-cycles requirement specified, with electric motor and factory-prewired motor controls, starter, gear-reduction unit, solenoid-operated brake, clutch, control stations, control devices, integral gearing for locking door, and accessories required for proper operation.

1. Manufacturers: Subject to compliance with requirements, [**provide products by the following**] [**provide products by one of the following**] [**available manufacturers offering products that may be incorporated into the Work include, but are not limited to, the following**]:
2. Basis-of-Design Product: Subject to compliance with requirements, provide [**product indicated on Drawings**] <**Insert manufacturer's name; product name or designation**> or comparable product by one of the following:

    a. Chamberlain Group, Inc. (The).
    b. <**Insert manufacturer's name**>.

3. Comply with NFPA 70.
4. Control equipment complying with NEMA ICS 1, NEMA ICS 2, and NEMA ICS 6, with NFPA 70 Class 2 control circuit, maximum 24-V ac or dc.

B. Usage Classification: Electric operator and components capable of operating for not less than number of cycles per hour indicated for each door.

C. Door Operator Location(s): Operator location indicated for each door.

1. Top-of-Hood Mounted: Operator is mounted to the right or left door head plate with the operator on top of the door-hood assembly and connected to the door drive shaft with drive chain and sprockets. Headroom is required for this type of mounting.
2. Front-of-Hood Mounted: Operator is mounted to the right or left door head plate with the operator on coil side of the door-hood assembly and connected to the door drive shaft with drive chain and sprockets. Front clearance is required for this type of mounting.
3. Wall Mounted: Operator is mounted to the inside front wall on the left or right side of door and connected to door drive shaft with drive chain and sprockets. Side room is required for this type of mounting. Wall mounted operator can also be mounted above or below shaft; if above shaft, headroom is required.
4. Bench Mounted: Operator is mounted to the right or left door head plate and connected to the door drive shaft with drive chain and sprockets. Side room is required for this type of mounting.
5. Through-Wall Mounted: Operator is mounted on other side of wall from coil side of door.

D. Motors: Reversible-type motor[**with controller (disconnect switch)**] for motor exposure indicated.

1. Electrical Characteristics:

    a. Phase: [**Single phase**] [**Polyphase**].
    b. Volts: [**115**] [**208**] [**230**] [**460**] <**Insert value**> V.
    c. Hertz: 60.

2. Motor Size: Minimum size as indicated. If not indicated, large enough to start, accelerate, and operate door in either direction from any position, at a speed not less than 8 in./sec. (203 mm/s) and not more than 12 in./sec. (305 mm/s), without exceeding nameplate ratings or service factor.
3. Operating Controls, Controllers, Disconnect Switches, Wiring Devices, and Wiring: Manufacturer's standard unless otherwise indicated.

4. Coordinate wiring requirements and electrical characteristics of motors and other electrical devices with building electrical system and each location where installed.

E. Limit Switches: Equip each motorized door with adjustable switches interlocked with motor controls and set to automatically stop door at fully opened and fully closed positions.

F. Obstruction Detection Devices: External entrapment protection consisting of indicated automatic safety sensor capable of protecting full width of door opening.[**For non-fire-rated doors, activation of device immediately stops and reverses downward door travel.**][**For fire-rated doors, activation delays closing.**]

1. Photoelectric Sensor: Manufacturer's standard system designed to detect an obstruction in door opening without contact between door and obstruction.

a. Self-Monitoring Type: Designed to interface with door operator control circuit to detect damage to or disconnection of sensing device. When self-monitoring feature is activated, door closes only with sustained or constant pressure on close button.

2. Electric Sensor Edge: Automatic safety sensor edge, located within astragal mounted to bottom bar. Contact with sensor activates device. Connect to control circuit using manufacturer's standard take-up reel or self-coiling cable.

a. Self-Monitoring Type: Four-wire configured device designed to interface with door operator control circuit to detect damage to or disconnection of sensor edge.

3. Pneumatic Sensor Edge: Automatic safety sensor edge, located within astragal mounted to bottom bar. Contact with sensor activates device.

G. Control Station: Three-button control station in fixed location with momentary-contact push-button controls labeled "Open" and "Stop" and sustained- or constant-pressure push-button control labeled "Close."

1. Type: Full-guarded, surface-mounted, heavy-duty type, with general-purpose NEMA ICS 6, Type 1 enclosure.

H. Emergency Manual Operation: Equip each electrically powered door with capability for emergency manual operation. Design manual mechanism so required force for door operation does not exceed [**25 lbf (111 N)**] [**30 lbf (133 N)**] <**Insert value**>.

I. Emergency Operation Disconnect Device: Equip operator with hand-operated disconnect mechanism for automatically engaging manual operator and releasing brake for emergency manual operation while disconnecting motor without affecting timing of limit switch. Mount mechanism so it is accessible from floor level. Include interlock device to automatically prevent motor from operating when emergency operator is engaged.

J. Motor Removal: Design operator so motor may be removed without disturbing limit-switch adjustment and without affecting emergency manual operation.

2.13 GENERAL FINISH REQUIREMENTS

A. Comply with NAAMM/NOMMA's "Metal Finishes Manual for Architectural and Metal Products (AMP 500-06)" for recommendations for applying and designating finishes.

B. Appearance of Finished Work: Noticeable variations in same piece are not acceptable. Variations in appearance of adjoining components are acceptable if they are within the range of approved Samples and are assembled or installed to minimize contrast.

2.14 ALUMINUM FINISHES

A. Mill Finish: Manufacturer's standard.

B. Clear Anodic Finish: AAMA 611, [**AA-M12C22A41, Class I, 0.018 mm**] [**AA-M12C22A31, Class II, 0.010 mm**] or thicker.

C. Color Anodic Finish: AAMA 611, [**AA-M12C22A42/A44, Class I, 0.018 mm**] [**AA-M12C22A32/A34, Class II, 0.010 mm**] or thicker.

D. Baked-Enamel or Powder-Coat Finish: AAMA 2603. Comply with coating manufacturer's written instructions for cleaning, conversion coating, application, and baking.

2.15 STEEL AND GALVANIZED-STEEL FINISHES

A. Factory Prime Finish: Manufacturer's standard primer, compatible with field-applied finish. Comply with coating manufacturer's written instructions for cleaning, pretreatment, application, and minimum dry film thickness.

B. Baked-Enamel or Powder-Coat Finish: Manufacturer's standard baked-on finish consisting of prime coat and thermosetting topcoat. Comply with coating manufacturer's written instructions for cleaning, pretreatment, application, and minimum dry film thickness.

2.16 STAINLESS-STEEL FINISHES

A. Surface Preparation: Remove tool and die marks and stretch lines, or blend into finish.

B. Polished Finishes: Grind and polish surfaces to produce uniform finish, free of cross scratches.

1. Run grain of directional finishes with long dimension of each piece.
2. When polishing is completed, passivate and rinse surfaces. Remove embedded foreign matter and leave surfaces chemically clean.
3. Directional Satin Finish: No. 4.

C. Bright, Cold-Rolled, Unpolished Finish: No. 2B.

PART 3 - EXECUTION

3.1 EXAMINATION

A. Examine substrates areas and conditions, with Installer present, for compliance with requirements for substrate construction and other conditions affecting performance of the Work.

B. Examine locations of electrical connections.

C. Proceed with installation only after unsatisfactory conditions have been corrected.

3.2 INSTALLATION

A. Install coiling counter doors and operating equipment complete with necessary hardware, anchors, inserts, hangers, and equipment supports; according to manufacturer's written instructions and as specified.

B. Install coiling counter doors, hoods, controls, and operators at the mounting locations indicated for each door.

C. Fire-Rated Doors: Install according to NFPA 80.

D. Smoke-Control Doors: Install according to NFPA 80 and NFPA 105.

3.3 STARTUP SERVICE

A. Engage a factory-authorized service representative to perform startup service.

1. Perform installation and startup checks according to manufacturer's written instructions.
2. Test and adjust controls and safety devices. Replace damaged and malfunctioning controls and equipment.
3. Test door closing when activated by detector or alarm-connected fire-release system. Reset door-closing mechanism after successful test.

3.4 ADJUSTING

A. Adjust hardware and moving parts to function smoothly so that doors operate easily, free of warp, twist, or distortion.

B. Lubricate bearings and sliding parts as recommended by manufacturer.

C. Adjust seals to provide tight fit around entire perimeter.

3.5 MAINTENANCE SERVICE

A. Initial Maintenance Service: Beginning at Substantial Completion, maintenance service shall include [**three**] [**six**] [**nine**] [**12**] months' full maintenance by skilled employees of coiling-door

Installer. Include [**monthly**] [**quarterly**] preventive maintenance, repair or replacement of worn or defective components, lubrication, cleaning, and adjusting as required for door operation. Parts and supplies shall be manufacturer's authorized replacement parts and supplies.

1. Perform maintenance, including emergency callback service, during normal working hours.
2. Include 24-hour-per-day, seven-day-per-week, emergency callback service.

3.6 DEMONSTRATION

A. Engage a factory-authorized service representative to train Owner's maintenance personnel to adjust, operate, and maintain coiling counter doors.

END OF SECTION 083313

SECTION 083473 - SOUND CONTROL DOOR ASSEMBLIES

PART 1 - GENERAL

1.1 RELATED DOCUMENTS

A. Drawings and general provisions of the Contract, including General and Supplementary Conditions and Division 01 Specification Sections, apply to this Section.

1.2 SUMMARY

A. Section Includes:

1. Wood sound-control doors.
2. Steel frames and sound-control seals.

B. Related Sections:

1. Section 042000 "Unit Masonry" for embedding anchors for sound-control door frames into masonry construction.

1.3 ACTION SUBMITTALS

A. Product Data: For each type of product indicated. Include sound ratings, construction details, material descriptions, core descriptions, fire-resistance rating and finishes.

B. Shop Drawings: Include the following:

1. Elevations of each door design.
2. Details of sound-control seals, door bottoms, and thresholds.
3. Details of doors, including vertical and horizontal edge details and metal thicknesses.
4. Frame details for each frame type, including dimensioned profiles and metal thicknesses.
5. Locations of reinforcement and preparations for hardware.
6. Details of each different wall opening condition.
7. Details of anchorages, joints, field splices, and connections.
8. Details of accessories.
9. Details of moldings, removable stops, and glazing.

C. Samples:

1. Finishes: For each type of exposed finish required, prepared on Samples of not less than 3 by 5 inches.

D. Schedule: Provide a schedule of sound-control door assemblies prepared by or under the supervision of supplier, using same reference numbers for details and openings as those on Drawings. Coordinate with the Door Hardware Schedule.

1.4 INFORMATIONAL SUBMITTALS

A. Qualification Data: For qualified Installer, manufacturer, and acoustical testing agency.

B. Product Test Reports: Based on evaluation of comprehensive tests performed by a qualified testing agency, for each type of sound-control door assembly.

C. Field quality-control reports.

D. Warranty: Samples of special warranty.

1.5 CLOSEOUT SUBMITTALS

A. Maintenance Data: For sound-control door assemblies to include in maintenance manuals.

1.6 QUALITY ASSURANCE

A. Installer Qualifications: Manufacturer's authorized representative who is trained and approved for installation of units required for this Project.

B. Acoustical Testing Agency Qualifications: An independent agency accredited as an acoustical laboratory according to the National Voluntary Laboratory Accreditation Program of NIST.

C. Source Limitations: Obtain sound-control door assemblies, including doors, frames, sound-control seals, hinges (when integral for sound control), thresholds, and other items essential for sound control, from single source from single manufacturer.

D. Sound Rating: Provide sound-control door assemblies identical to those of assemblies tested as sound-retardant units by an acoustical testing agency, and have the following minimum rating:

1. STC Rating: As indicated on Drawings as determined by ASTM E 413 when tested in an operable condition according to ASTM E 90 and ASTM E 1408.

E. Fire-Rated Assemblies: Complying with NFPA 80 and listed and labeled by a qualified testing agency acceptable to authorities having jurisdiction for fire-protection ratings indicated, based on testing at positive pressure according to NFPA 252 or UL 10C.

1. Smoke- and Draft Control Assemblies: Provide an assembly with gaskets listed and labeled for smoke and draft control by a qualified testing agency acceptable to authorities having jurisdiction, based on testing according to UL 1784 and installed in compliance with NFPA 105.

1.7 DELIVERY, STORAGE, AND HANDLING

A. Deliver doors and frames palletized, wrapped, or crated to provide protection during transit and Project-site storage. Do not use nonvented plastic.

1. Provide additional protection to prevent damage to finish of factory-finished wood doors.

B. Shipping Spreaders: Deliver welded frames with two (2) removable spreader bars across bottom of frames, tack welded or mechanically attached to jambs and mullions.

C. Store doors and frames under cover at Project site. Place units in a vertical position with heads up, spaced by blocking, on minimum 4-inch- high, wood blocking. Avoid using nonvented plastic or canvas shelters that could create a humidity chamber.

1. If wrappers on doors become wet, remove cartons immediately. Provide a minimum of ¼-inch space between each stacked door to permit air circulation.

1.8 PROJECT CONDITIONS

A. Environmental Limitations: Do not deliver or install sound-control wood doors until spaces are enclosed and weatherproof, wet work in spaces is complete and dry, and ambient temperature and humidity conditions are maintained at the levels indicated for Project when occupied for its intended use.

B. Field Measurements: Verify actual dimensions of openings by field measurements before fabrication.

1.9 COORDINATION

A. Coordinate installation of anchorages for sound-control door assemblies. Furnish setting drawings, templates, and directions for installing anchorages, including sleeves, inserts, anchor bolts, and items with integral anchors. Deliver such items to Project site in time for installation.

1.10 WARRANTY

A. Special Warranty: Manufacturer's standard form in which manufacturer agrees to repair or replace components of sound-control door assemblies that fail in materials or workmanship within specified warranty period.

1. Failures include, but are not limited to, the following:

a. Failure to meet sound rating requirements.
b. Faulty operation of sound seals.
c. Deterioration of metals, metal finishes, and other materials beyond normal use or weathering.
d. Wood doors that are warped (bow, cup, or twist) more than ¼ inch in a 42-by-84-inch section, or show telegraphing of core construction in face veneers exceeding 0.01 inch in a 3-inch span.

2. Warranty Period for Wood Doors: Two (2) years from date of Substantial Completion.

PART 2 - PRODUCTS

2.1 WOOD SOUND-CONTROL DOORS

A. Manufacturers: Subject to compliance with requirements, available manufacturers offering products that may be incorporated into the Work include, but are not limited to, the following:

1. Eggers Industries.
2. Marshfield DoorSystems, Inc.
3. Overly Door Company.
4. Substitutions: Under provisions of Section 012500 “Substitution Procedures”.

B. Description: Provide flush-design sound-control doors, 1¾ inches thick; with manufacturer's standard sound-retardant core as required to provide STC rating indicated. Fabricate according to WDMA 1.S.1-A.

C. Materials: Comply with Section 081416 "Flush Wood Doors." for grade, faces, veneer matching, fabrication, finishing, and other requirements unless otherwise indicated.

1. Glazing: As required by sound-control door assembly manufacturer to comply with sound-control requirements.

D. Finishes:

1. Factory finish sound-control wood doors to match doors specified in Section 081416 "Flush Wood Doors."

2.2 SOUND-CONTROL PANELS

A. Provide sound-control panels of same materials, construction, sound rating, and finish as specified for adjoining sound-control wood doors.

2.3 SOUND-CONTROL FRAMES

A. Description: Fabricate sound-control door frames with corners mitered, reinforced, and continuously welded full depth and width of frame. Fabricate according to ANSI/NAAMM-HMMA 865.

1. Weld frames according to NAAMM-HMMA 820.
2. Interior Frames: Fabricate from cold-rolled steel sheet unless otherwise indicated, 0.075-inch nominal thickness, or thicker as required to provide STC rating indicated.
3. Sound-Control Panel Stops: Formed integral with frames, a minimum of 5/8 inch high, unless otherwise indicated.
4. Hardware Reinforcement: Fabricate according to ANSI/NAAMM-HMMA 865 of same material as face sheets.
5. Jamb Anchors:

a. Masonry Type: Adjustable strap-and-stirrup or T-shaped anchors to suit frame size, not less than 0.064-inch nominal thickness metallic-coated steel with corrugated or perforated straps not less than 2 inches wide by 10 inches long; or wire anchors not less than 0.156 inch thick.

6. Floor Anchors: Not less than 0.079-inch nominal thickness metallic-coated steel, and as follows:

a. Monolithic Concrete Slabs: Clip-type anchors, with two holes to receive fasteners.

B. Materials:

1. Cold-Rolled Steel Sheet: ASTM A 1008, Commercial Steel (CS), Type B, suitable for exposed applications.
2. Hot-Rolled Steel Sheet: ASTM A 1011, Commercial Steel (CS), Type B; free of scale, pitting, or surface defects; pickled and oiled.

3. Metallic-Coated Steel Sheet: ASTM A 653, Commercial Steel (CS), Type B, with G60 zinc (galvanized) or A40 zinc-iron-alloy (galvannealed) coating designation.
4. Supports and Anchors: After fabricating, galvanize units to be built into exterior walls according to ASTM A 153, Class B.
5. Inserts, Bolts, and Fasteners: Provide items to be built into exterior walls, hot-dip galvanized according to ASTM A 153 or ASTM F 2329.
6. Powder-Actuated Fasteners in Concrete: Fastener system of type suitable for application indicated, fabricated from corrosion-resistant materials, with clips or other accessory devices for attaching sound-control door frames of type indicated.
7. Mineral-Fiber Insulation: Insulation composed of rock-wool fibers, slag-wool fibers, or glass fibers.

C. Finishes:

1. Factory-Applied Paint Finish: Manufacturer's standard primer and finish coats, complying with ANSI/SDI A250.3 for performance and acceptance criteria.

a. Color and Gloss: As selected by Architect from manufacturer's full range.

2.4 SOUND-CONTROL HARDWARE

A. Description: Provide manufacturer's standard sound-control system, including head and jamb seals, door bottoms, cam-lift hinges, and thresholds, as required by testing to achieve STC rating indicated.

1. Compression Seals: One-piece units; consisting of closed-cell sponge neoprene seal held in place by metal retainer; with retainer cover of same material as door frame; attached to door frame with concealed screws.
2. Automatic Door Bottoms: Neoprene or silicone gasket, held in place by metal housing, that automatically drops to form seal when door is closed; mounted to bottom edge of door with screws.

a. Mounting: Mortised or semimortised into bottom of door as required by testing to achieve STC rating indicated.

3. Cam-Lift Hinges: Full-mortise template type that raises door ½ inch when door is fully open; with hardened pin; fabricated from stainless steel.
4. Thresholds: Flat, smooth, unfluted type as recommended by manufacturer; fabricated from aluminum.

a. Finish: Clear anodic finish.

B. Other Hardware: Comply with requirements in Section 087100 "Door Hardware".

2.5 SOUND-CONTROL ACCESSORIES

A. Glazing: Comply with requirements in Section 088000 "Glazing."

B. Grout: Comply with ASTM C 476, with a slump of not more than 4 inches as measured according to ASTM C 143.

C. Corrosion-Resistant Coating: Cold-applied asphalt mastic, compounded for 15-mil dry film thickness per coat. Provide inert-type noncorrosive compound free of asbestos fibers, sulfur components, and other deleterious impurities.

2.6 FABRICATION

A. Sound-Control Wood Door Fabrication: Factory fit doors to suit frame-opening sizes indicated, with uniform clearances and bevels according to referenced quality standard, unless otherwise indicated. Comply with final door hardware schedules and hardware templates.

1. Comply with requirements in NFPA 80 for fire-rated and smoke control doors.
2. Glazed Lites: Factory install glazed lites according to requirements of tested assembly to achieve STC rating indicated.
3. Locate door hardware as indicated, or if not indicated, according to DHI WDHS.3, "Recommended Locations for Architectural Hardware for Wood Flush Doors."

a. Coordinate measurements of hardware mortises in steel frames to verify dimensions and alignment before factory machining.

B. Sound-Control Frame Fabrication: Fabricate sound-control frames to be rigid and free of defects, warp, or buckle. Accurately form metal to required sizes and profiles, with minimum radius for thickness of metal. Where practical, fit and assemble units in manufacturer's plant. To ensure proper assembly at Project site, clearly identify work that cannot be permanently factory assembled before shipment.

1. Weld flush face joints continuously; grind, fill, dress, and make smooth, flush, and invisible. Where frames are fabricated in sections due to shipping or handling limitations, provide alignment plates or angles at each joint, fabricated from same thickness metal as frames.
2. Provide countersunk, flat- or oval-head exposed screws and bolts for exposed fasteners unless otherwise indicated.
3. Floor Anchors: Weld anchors to bottom of jambs and mullions with at least four (4) spot welds per anchor.
4. Jamb Anchors: Provide number and spacing of anchors as follows:

a. Masonry Type: Locate anchors not more than 18 inches from top and bottom of frame. Space anchors not more than 32 inches o.c. and as follows:

1) Two (2) anchors per jamb up to 60 inches in height.
2) Three (3) anchors per jamb from 60 to 90 inches in height.

5. Hardware Preparation: Factory prepare sound-control frames to receive templated mortised hardware; include cutouts, reinforcement, mortising, drilling, and tapping, according to the Door Hardware Schedule and templates furnished as specified in "Door Hardware."

a. Reinforce frames to receive nontemplated mortised and surface-mounted door hardware.
b. Locate hardware as indicated, or if not indicated, according to NAAMM-HMMA 831, "Recommended Hardware Locations for Custom Hollow Metal Doors and Frames."

6. Tolerances: Fabricate frames to tolerances indicated in ANSI/NAAMM-HMMA 865.

PART 3 - EXECUTION

3.1 EXAMINATION

A. Examine substrates, areas, and conditions, with Installer present, for compliance with requirements for installation tolerances and other conditions affecting performance of sound-control door assemblies.

B. Examine roughing-in for embedded and built-in anchors to verify actual locations of sound-control door frame connections before frame installation.

C. Proceed with installation only after unsatisfactory conditions have been corrected.

3.2 PREPARATION

A. Remove welded-in shipping spreaders installed at factory. Restore exposed finish by grinding, filling, and dressing, as required to make repaired area smooth, flush, and invisible on exposed faces.

B. Prior to installation and with installation spreaders in place, adjust and securely brace sound-control door frames to the following tolerances:

1. Squareness: Plus or minus 1/16 inch, measured at door rabbet on a line 90 degrees from jamb perpendicular to frame head.
2. Alignment: Plus or minus 1/16 inch, measured at jambs on a horizontal line parallel to plane of wall.
3. Twist: Plus or minus 1/16 inch, measured at opposite face corners of jambs on parallel lines, and perpendicular to plane of wall.
4. Plumbness: Plus or minus 1/16 inch, measured at jambs on a perpendicular line from head to floor.

C. Drill and tap doors and frames to receive nontemplated mortised and surface-mounted door hardware.

3.3 INSTALLATION

A. General: Install sound-control door assemblies plumb, rigid, properly aligned, and securely fastened in place; comply with manufacturer's written instructions.

B. Frames: Install sound-control door frames in sizes and profiles indicated.

1. Set frames accurately in position; plumbed, aligned, and braced securely until permanent anchors are set. After wall construction is complete, remove temporary braces, leaving surfaces smooth and undamaged.

a. At fire-rated openings, install frames according to NFPA 80.
b. At openings requiring smoke and draft control, install frames according to NFPA 105.

c. Where frames are fabricated in sections due to shipping or handling limitations, field splice at approved locations by welding face joint continuously; grind, fill, and dress; make splice smooth, flush, and invisible on exposed faces.
d. Install sound-control frames with removable glazing stops located on secure side of opening.
e. Remove temporary braces only after frames or bucks have been properly set and secured.
f. Check squareness, twist, and plumbness of frames as walls are constructed. Shim as necessary to comply with installation tolerances.
g. Apply corrosion-resistant coatings coating to backs of frames to be filled with mortar and grout.

2. Floor Anchors: Provide floor anchors for each jamb and mullion that extends to floor and secure with postinstalled expansion anchors.

a. Floor anchors may be set with powder-actuated fasteners instead of postinstalled expansion anchors, if so indicated and approved on Shop Drawings.

3. Grouted Frames: Solidly fill space between frames and substrate with grout. Take precautions, including bracing frames, to ensure that frames are not deformed or damaged by grout forces.
4. Installation Tolerances: Adjust sound-control door frames for squareness, alignment, twist, and plumbness to the following tolerances:

a. Squareness: Plus or minus 1/16 inch, measured at door rabbet on a line 90 degrees from jamb perpendicular to frame head.
b. Alignment: Plus or minus 1/16 inch, measured at jambs on a horizontal line parallel to plane of wall.
c. Twist: Plus or minus 1/16 inch, measured at opposite face corners of jambs on parallel lines, and perpendicular to plane of wall.
d. Plumbness: Plus or minus 1/16 inch, measured at jambs on a perpendicular line from head to floor.

C. Doors: Fit sound-control doors accurately in frames, within clearances indicated below. Shim as necessary.

1. Non-Fire-Rated Doors: Fit non-fire-rated doors accurately in frames with the following clearances:

a. Jambs: 1/8 inch.
b. Head with Butt Hinges: 1/8 inch.
c. Head with Cam-Lift Hinges: As required by manufacturer, but not more than 3/8 inch.
d. Sill: Manufacturer's standard.
e. Between Edges of Pairs of Doors: 1/8 inch.
2. Fire-Rated Doors: Install fire-rated doors with clearances according to NFPA 80.

D. Sound-Control Seals: Where seals have been prefit and preinstalled in the factory and subsequently removed for shipping, reinstall seals and adjust according to manufacturer's written instructions.

E. Cam-Lift Hinges: Install hinges according to manufacturer's written instructions.

F. Thresholds: Set thresholds in full bed of sealant complying with requirements in Division 07 Section "Joint Sealants."

G. Glazing: Comply with installation requirements in Division 08 Section "Glazing" and with sound-control door assembly manufacturer's written instructions.

1. Secure stops with countersunk flat- or oval-head machine screws spaced uniformly not more than 9 inches o.c., and not more than 2 inches o.c. from each corner.

3.4 FIELD QUALITY CONTROL

A. Testing Agency: Engage a qualified testing agency to perform tests and inspections.

B. Testing Services: Acoustical testing and inspecting agency shall select one (1) sound-control door(s) at random from sound-control door assemblies that are completely installed and perform testing for verification that assembly complies with STC rating requirements.

1. Field tests shall be conducted according to ASTM E 336, with results calculated according to ASTM E 413. Acceptable field STC values shall be within 5 dB of laboratory STC values.
2. Inspection Report: Acoustical testing agency shall submit report in writing to Architect and Contractor within twenty-four (24) hours after testing.
3. If tested door fails, replace or rework all sound-control door assemblies to bring them into compliance at Contractor's expense.

a. Additional testing and inspecting, at Contractor's expense, will be performed to determine compliance of replaced or additional work with specified requirements.

C. Prepare test and inspection reports.

3.5 ADJUSTING AND CLEANING

A. Final Adjustments: Check and adjust seals, door bottoms, and other sound-control hardware items right before final inspection. Leave work in complete and proper operating condition.

B. Remove and replace defective work, including defective or damaged sound seals and doors and frames that are warped, bowed, or otherwise unacceptable.

1. Adjust gaskets, gasket retainers, and retainer covers to provide contact required to achieve STC rating.

C. Clean grout off sound-control door frames immediately after installation.

D. Prime-Coat Touchup: Immediately after erection, sand smooth rusted or damaged areas of prime coat and apply touchup of compatible air-drying primer.

END OF SECTION 083473

SECTION 084113 - ALUMINUM-FRAMED ENTRANCES AND STOREFRONTS

PART 1 - GENERAL

1.1 RELATED DOCUMENTS

A. Drawings and general provisions of the Contract, including General and Supplementary Conditions and Division 01 Specification Sections, apply to this Section.

1.2 SUMMARY

A. Section Includes:

1. Exterior and interior manual-swing entrance doors and door-frame units.

1.3 PREINSTALLATION MEETINGS

A. Preinstallation Conference: Conduct conference at Project site.

1.4 ACTION SUBMITTALS

A. Product Data: For each type of product.

1. Include construction details, material descriptions, dimensions of individual components and profiles, and finishes.

B. HPBS Submittals:

1. Product Data for Section 16a-38k-5(d): For glazing sealants used inside the weatherproofing system, documentation including printed statement of VOC content.

C. Shop Drawings: For aluminum-framed entrances and storefronts. Include plans, elevations, sections, full-size details, and attachments to other work.

1. Include details of provisions for assembly expansion and contraction and for draining moisture occurring within the assembly to the exterior.
2. Include full-size isometric details of each vertical-to-horizontal intersection of aluminum-framed entrances and storefronts, showing the following:

a. Joinery, including concealed welds.
b. Anchorage.
c. Expansion provisions.
d. Glazing.
e. Flashing and drainage.

3. Show connection to and continuity with adjacent thermal, weather, air, and vapor barriers.

D. Samples for Initial Selection: For units with factory-applied color finishes.

1.5 INFORMATIONAL SUBMITTALS

A. Qualification Data: For Installer and field testing agency.

B. Energy Performance Certificates: For aluminum-framed entrances and storefronts, accessories, and components, from manufacturer.

1. Basis for Certification: NFRC-certified energy performance values for each aluminum-framed entrance and storefront.

C. Product Test Reports: For aluminum-framed entrances and storefronts, for tests performed by a qualified testing agency.

D. Source quality-control reports.

E. Field quality-control reports.

F. Sample Warranties: For special warranties.

1.6 CLOSEOUT SUBMITTALS

A. Maintenance Data: For aluminum-framed entrances and storefronts to include in maintenance manuals.

1.7 QUALITY ASSURANCE

A. Installer Qualifications: An entity that employs installers and supervisors who are trained and approved by manufacturer.

B. Testing Agency Qualifications: Qualified according to ASTM E 699 for testing indicated.

C. Product Options: Information on Drawings and in Specifications establishes requirements for aesthetic effects and performance characteristics of assemblies. Aesthetic effects are indicated by dimensions, arrangements, alignment, and profiles of components and assemblies as they relate to sightlines, to one another, and to adjoining construction.

1. Do not change intended aesthetic effects, as judged solely by Architect, except with Architect's approval. If changes are proposed, submit comprehensive explanatory data to Architect for review.

1.8 MOCKUPS

A. Mockups: Build mockups to verify selections made under Sample submittals and to demonstrate aesthetic effects and set quality standards for fabrication and installation.
1. Testing shall be performed on mockups according to requirements in "Field Quality Control" Article.
2. Approval of mockups does not constitute approval of deviations from the Contract Documents contained in mockups unless Architect specifically approves such deviations in writing.

1.9 WARRANTY

A. Special Warranty: Manufacturer agrees to repair or replace components of aluminum-framed entrances and storefronts that do not comply with requirements or that fail in materials or workmanship within specified warranty period.

1. Failures include, but are not limited to, the following:

a. Structural failures including, but not limited to, excessive deflection.
b. Noise or vibration created by wind and thermal and structural movements.
c. Deterioration of metals and other materials beyond normal weathering.
d. Water penetration through fixed glazing and framing areas.
e. Failure of operating components.

2. Warranty Period: Ten (10) years from date of Substantial Completion.

B. Special Finish Warranty: Standard form in which manufacturer agrees to repair finishes or replace aluminum that shows evidence of deterioration of factory-applied finishes within specified warranty period.

1. Deterioration includes, but is not limited to, the following:

a. Color fading more than 5 Hunter units when tested according to ASTM D 2244.
b. Chalking in excess of a No. 8 rating when tested according to ASTM D 4214.
c. Cracking, checking, peeling, or failure of paint to adhere to bare metal.

2. Warranty Period: Twenty (20) years from date of Substantial Completion.

PART 2 - PRODUCTS

2.1 PERFORMANCE REQUIREMENTS

A. General Performance: Comply with performance requirements specified, as determined by testing of aluminum-framed entrances and storefronts representing those indicated for this Project without failure due to defective manufacture, fabrication, installation, or other defects in construction.

1. Aluminum-framed entrances and storefronts shall withstand movements of supporting structure including, but not limited to, story drift, twist, column shortening, long-term creep, and deflection from uniformly distributed and concentrated live loads.
2. Failure also includes the following:

a. Thermal stresses transferring to building structure.
b. Glass breakage.
c. Noise or vibration created by wind and thermal and structural movements.
d. Loosening or weakening of fasteners, attachments, and other components.
e. Failure of operating units.

B. Structural Loads:

1. Wind Loads: As indicated on Drawings.

2. Other Design Loads: As indicated on Drawings.

C. Deflection of Framing Members: At design wind pressure, as follows:

1. Deflection Normal to Wall Plane: Limited to 1/175 of clear span for spans up to 13 feet 6 inches and to 1/240 of clear span plus ¼ inch for spans greater than 13 feet 6 inches or an amount that restricts edge deflection of individual glazing lites to ¾ inch, whichever is less.
2. Deflection Parallel to Glazing Plane: Limited to 1/360 of clear span or 1/8 inch, whichever is smaller.

D. Structural: Test according to ASTM E 330 as follows:

1. When tested at positive and negative wind-load design pressures, assemblies do not evidence deflection exceeding specified limits.
2. When tested at one hundred fifty percent (150%) of positive and negative wind-load design pressures, assemblies, including anchorage, do not evidence material failures, structural distress, or permanent deformation of main framing members exceeding 0.2 percent of span.
3. Test Durations: As required by design wind velocity, but not less than ten (10) seconds.

E. Air Infiltration: Test according to ASTM E 283 for infiltration as follows:

1. Fixed Framing and Glass Area:

   a. Maximum air leakage of 0.06 cfm/sq. ft. at a static-air-pressure differential of 6.24 lbf/sq. ft.

2. Entrance Doors:

   a. Pair of Doors: Maximum air leakage of 0.50 cfm/sq. ft. at a static-air-pressure differential of 1.57 lbf/sq. ft.

F. Water Penetration under Static Pressure: Test according to ASTM E 331 as follows:

1. No evidence of water penetration through fixed glazing and framing areas when tested according to a minimum static-air-pressure differential of twenty percent (20%) of positive wind-load design pressure, but not less than 12 lbf/sq. ft.

G. Seismic Performance: Aluminum-framed entrances and storefronts shall withstand the effects of earthquake motions determined according to ASCE/SEI 7.

H. Energy Performance: Certify and label energy performance according to NFRC as follows:

1. Thermal Transmittance (U-factor): Fixed glazing and framing areas shall have U-factor of not more than 0.41 Btu/sq. ft. x h x deg F as determined according to NFRC 100.
2. Solar Heat Gain Coefficient: Fixed glazing and framing areas shall have a solar heat gain coefficient of no greater than 0.45 as determined according to NFRC 200.

I. Thermal Movements: Allow for thermal movements resulting from ambient and surface temperature changes:

1. Temperature Change: 120 deg F (67 deg C), ambient; 180 deg F (100 deg C), material surfaces.

2.2 MANUFACTURERS

A. Basis-of-Design Product:

1. EFCO Corporation; **Series 403 (T) Storefront and Series D500 Entrances**

B. Manufacturers: Subject to compliance with requirements, available manufacturers offering products that may be incorporated into the Work include, but are not limited to, the following:

1. Kawneer North America
2. Oldcastle BuildingEnvelope
3. TRACO
4. YKK AP America Inc.
5. Substitutions: Under provisions of Section 012500 “Substitution Procedures”.

C. Source Limitations: Obtain all components of aluminum-framed entrance and storefront system, including framing, spandrel panels and accessories, from single manufacturer.

2.3 FRAMING

A. Framing Members: Manufacturer's extruded- or formed-aluminum framing members of thickness required and reinforced as required to support imposed loads.

1. Construction: Thermally broken.
2. Glazing System: Retained mechanically with gaskets on four sides.
3. Glazing Plane: Front.
4. Finish: High-performance organic finish.
5. Fabrication Method: Field-fabricated stick system.

B. Backer Plates: Manufacturer's standard, continuous backer plates for framing members, if not integral, where framing abuts adjacent construction.

C. Brackets and Reinforcements: Manufacturer's standard high-strength aluminum with nonstaining, nonferrous shims for aligning system components.

D. Materials:

1. Aluminum: Alloy and temper recommended by manufacturer for type of use and finish indicated.

a. Sheet and Plate: ASTM B 209.
b. Extruded Bars, Rods, Profiles, and Tubes: ASTM B 221.

2. Steel Reinforcement: Manufacturer's standard zinc-rich, corrosion-resistant primer complying with SSPC-PS Guide No. 12.00; applied immediately after surface preparation and pretreatment. Select surface preparation methods according to recommendations in SSPC-SP COM, and prepare surfaces according to applicable SSPC standard.

a. Cold-Rolled Sheet and Strip: ASTM A 1008.

b. Hot-Rolled Sheet and Strip: ASTM A 1011.

2.4 INSULATED SPANDREL PANELS

A. Insulated Spandrel Panels: Laminated, metal-faced flat panels with no deviations in plane exceeding 0.8 percent of panel dimension in width or length.

1. Overall Panel Thickness: 1 inch.
2. Exterior Skin: Aluminum.

a. Thickness: Manufacturer's standard for finish and texture indicated.
b. Finish: Match framing system.
c. Texture: Smooth.
d. Backing Sheet: 0.125-inch-thick, corrugated, high-density polyethylene.

3. Interior Skin: Aluminum.

a. Thickness: Manufacturer's standard for finish and texture indicated.
b. Finish: Matching storefront framing.
c. Texture: Smooth.
d. Backing Sheet: 0.125-inch-thick, corrugated, high-density polyethylene.

4. Thermal Insulation Core: Manufacturer's standard rigid, closed-cell, polyisocyanurate board.

B. Surface-Burning Characteristics: Comply with ASTM E 84; testing by a qualified testing agency. Identify products with appropriate markings of applicable testing agency.

1. Flame-Spread Index: 25 or less.
2. Smoke-Developed Index: 450 or less.

2.5 ENTRANCE DOOR SYSTEMS

A. Entrance Doors: Manufacturer's standard glazed entrance doors for manual-swing operation.

1. Door Construction: 1¾-inch overall thickness, with minimum 0.125-inch-thick, extruded-aluminum tubular rail and stile members. Mechanically fasten corners with reinforcing brackets that are deeply penetrated and fillet welded or that incorporate concealed tie rods.

2. Door Design: Wide stile; 5-inch nominal width.
3. Glazing Stops and Gaskets: Square, snap-on, extruded-aluminum stops and preformed gaskets.

2.6 ENTRANCE DOOR HARDWARE

A. Entrance Door Hardware: As specified in Section 087100 "Door Hardware."

2.7 GLAZING

A. Glazing: Comply with Section 088000 "Glazing."

B. Glazing Gaskets: Manufacturer's standard sealed-corner pressure-glazing system of black, resilient elastomeric glazing gaskets, setting blocks, and shims or spacers.

C. Glazing Sealants: As recommended by manufacturer.

D. Sealants used inside the weatherproofing system shall have a VOC content of 250 g/L.

2.8 ACCESSORIES

A. Fasteners and Accessories: Manufacturer's standard corrosion-resistant, nonstaining, nonbleeding fasteners and accessories compatible with adjacent materials.

1. Use self-locking devices where fasteners are subject to loosening or turning out from thermal and structural movements, wind loads, or vibration.
2. Reinforce members as required to receive fastener threads.
3. Use exposed fasteners with countersunk Phillips screw heads, fabricated from 300 series stainless steel.

B. Anchors: Three-way adjustable anchors with minimum adjustment of 1 inch that accommodate fabrication and installation tolerances in material and finish compatible with adjoining materials and recommended by manufacturer.

1. Concrete and Masonry Inserts: Hot-dip galvanized cast-iron, malleable-iron, or steel inserts complying with ASTM A 123 or ASTM A 153 requirements.

C. Concealed Flashing: Manufacturer's standard corrosion-resistant, nonstaining, nonbleeding flashing compatible with adjacent materials.

D. Bituminous Paint: Cold-applied asphalt-mastic paint complying with SSPC-Paint 12 requirements except containing no asbestos, formulated for 30-mil thickness per coat.

2.9 FABRICATION

A. Form or extrude aluminum shapes before finishing.

B. Weld in concealed locations to greatest extent possible to minimize distortion or discoloration of finish. Remove weld spatter and welding oxides from exposed surfaces by descaling or grinding.

C. Fabricate components that, when assembled, have the following characteristics:

1. Profiles that are sharp, straight, and free of defects or deformations.
2. Accurately fitted joints with ends coped or mitered.
3. Physical and thermal isolation of glazing from framing members.
4. Accommodations for thermal and mechanical movements of glazing and framing to maintain required glazing edge clearances.
5. Provisions for field replacement of glazing from exterior.
6. Fasteners, anchors, and connection devices that are concealed from view to greatest extent possible.

D. Mechanically Glazed Framing Members: Fabricate for flush glazing without projecting stops.

E. Storefront Framing: Fabricate components for assembly using shear-block system.

F. Entrance Door Frames: Reinforce as required to support loads imposed by door operation and for installing entrance door hardware.

1. At exterior doors, provide compression weather stripping at fixed stops.

G. Entrance Doors: Reinforce doors as required for installing entrance door hardware.

1. At pairs of exterior doors, provide sliding-type weather stripping retained in adjustable strip and mortised into door edge.
2. At exterior doors, provide weather sweeps applied to door bottoms.

H. Entrance Door Hardware Installation: Factory install entrance door hardware to the greatest extent possible. Cut, drill, and tap for factory-installed entrance door hardware before applying finishes.

I. After fabrication, clearly mark components to identify their locations in Project according to Shop Drawings.

2.10 ALUMINUM FINISHES

A. High-Performance Organic Finish: Two-coat fluoropolymer finish complying with AAMA 2605 and containing not less than seventy percent (70%) PVDF resin by weight in color coat. Prepare, pretreat, and apply coating to exposed metal surfaces to comply with coating and resin manufacturers' written instructions.

1. Color and Gloss: As selected by Architect and Owner from manufacturer's full range.

PART 3 - EXECUTION

3.1 EXAMINATION

A. Examine areas, with Installer present, for compliance with requirements for installation tolerances and other conditions affecting performance of the Work.

B. Proceed with installation only after unsatisfactory conditions have been corrected.

3.2 INSTALLATION

A. General:

1. Comply with manufacturer's written instructions.
2. Do not install damaged components.
3. Fit joints to produce hairline joints free of burrs and distortion.
4. Rigidly secure nonmovement joints.
5. Install anchors with separators and isolators to prevent metal corrosion and electrolytic deterioration and to prevent impeding movement of moving joints.
6. Seal perimeter and other joints watertight unless otherwise indicated.

B. Metal Protection:

1. Where aluminum is in contact with dissimilar metals, protect against galvanic action by painting contact surfaces with materials recommended by manufacturer for this purpose or by installing nonconductive spacers.
2. Where aluminum is in contact with concrete or masonry, protect against corrosion by painting contact surfaces with bituminous paint.

C. Set continuous sill members and flashing in full sealant bed as specified in Section 079200 "Joint Sealants" to produce weathertight installation.

D. Install components plumb and true in alignment with established lines and grades.

E. Install glazing as specified in Section 088000 "Glazing."

F. Entrance Doors: Install doors to produce smooth operation and tight fit at contact points.

1. Exterior Doors: Install to produce weathertight enclosure and tight fit at weather stripping.

3.3 ERECTION TOLERANCES

A. Erection Tolerances: Install aluminum-framed entrances and storefronts to comply with the following maximum tolerances:

1. Plumb: 1/8 inch in 10 feet; ¼ inch in 40 feet.
2. Level: 1/8 inch in 20 feet; ¼ inch in 40 feet.
3. Alignment:

a. Where surfaces abut in line or are separated by reveal or protruding element up to ½ inch wide, limit offset from true alignment to 1/16 inch.
b. Where surfaces are separated by reveal or protruding element from ½ to 1 inch wide, limit offset from true alignment to 1/8 inch.
c. Where surfaces are separated by reveal or protruding element of 1 inch wide or more, limit offset from true alignment to ¼ inch.

4. Location: Limit variation from plane to 1/8 inch in 12 feet; ½ inch over total length.

3.4 FIELD QUALITY CONTROL

A. Testing Agency: Engage a qualified testing agency to perform tests and inspections.

B. Field Quality-Control Testing: Perform the following test on mockups.

1. Water-Spray Test: Before installation of interior finishes has begun, areas designated by Architect shall be tested according to AAMA 501.2 and shall not evidence water penetration.

a. Perform a minimum of two (2) tests in areas as directed by Architect.

C. Aluminum-framed entrances and storefronts will be considered defective if they do not pass tests and inspections.

D. Prepare test and inspection reports.

END OF SECTION 084113

SECTION 084413 - GLAZED ALUMINUM CURTAIN WALLS

PART 1 - GENERAL

1.1 RELATED DOCUMENTS

A. Drawings and general provisions of the Contract, including General and Supplementary Conditions and Division 01 Specification Sections, apply to this Section.

1.2 SUMMARY

A. Section includes glazed aluminum curtain walls.

1.3 PREINSTALLATION MEETINGS

A. Preinstallation Conference: Conduct conference at Project site.

1.4 ACTION SUBMITTALS

A. Product Data: For each type of product.

1. Include construction details, material descriptions, dimensions of individual components and profiles, and finishes.

B. HPBS Submittals:

1. Product Data for Section 16a-38k-5(d): For glazing sealants used inside the weatherproofing system, documentation including printed statement of VOC content.

C. Shop Drawings: For glazed aluminum curtain walls. Include plans, elevations, sections, full-size details, and attachments to other work.

1. Include details of provisions for assembly expansion and contraction and for draining moisture occurring within the assembly to the exterior.
2. Include full-size isometric details of each vertical-to-horizontal intersection of glazed aluminum curtain walls, showing the following:

   a. Joinery, including concealed welds.
   b. Anchorage.
   c. Expansion provisions.
   d. Glazing.
   e. Flashing and drainage.

3. Show connection to and continuity with adjacent thermal, weather, air, and vapor barriers.

D. Samples: For units with factory-applied color finishes.

1.5 INFORMATIONAL SUBMITTALS

A. Qualification Data: For Installer.

B. Energy Performance Certificates: For glazed aluminum curtain walls, accessories, and components from manufacturer.

1. Basis for Certification: NFRC-certified energy performance values for each glazed aluminum curtain wall.

C. Product Test Reports: For glazed aluminum curtain walls, for tests performed by a qualified testing agency.

D. Source quality-control reports.

E. Sample Warranties: For special warranties.

1.6 CLOSEOUT SUBMITTALS

A. Maintenance Data: For glazed aluminum curtain walls to include in maintenance manuals.

1.7 QUALITY ASSURANCE

A. Installer Qualifications: An entity that employs installers and supervisors who are trained and approved by manufacturer.

B. Product Options: Information on Drawings and in Specifications establishes requirements for aesthetic effects and performance characteristics of assemblies. Aesthetic effects are indicated by dimensions, arrangements, alignment, and profiles of components and assemblies as they relate to sightlines, to one another, and to adjoining construction.

1. Do not change intended aesthetic effects, as judged solely by Architect, except with Architect's approval. If changes are proposed, submit comprehensive explanatory data to Architect for review.

C. Conform to requirements of ANSI A117.1 and the Americans with Disabilities Act.

1. A minimum of one (1) operable window in each room or space with operable windows must be operated without tight grasping, pinching or turning of the wrist and must meet ICC/ANSI reach ranges.

1.8 MOCKUPS

A. Mockups: Build mockups to verify selections made under Sample submittals and to demonstrate aesthetic effects and set quality standards for fabrication and installation.

1. Build mockup of typical wall area as shown on Drawings.
2. Approval of mockups does not constitute approval of deviations from the Contract Documents contained in mockups unless Architect specifically approves such deviations in writing.

1.9 WARRANTY

A. Special Assembly Warranty: Manufacturer agrees to repair or replace components of glazed aluminum curtain wall that do not comply with requirements or that fail in materials or workmanship within specified warranty period.

1. Failures include, but are not limited to, the following:

a. Structural failures including, but not limited to, excessive deflection.
b. Noise or vibration created by wind and thermal and structural movements.
c. Deterioration of metals and other materials beyond normal weathering.
d. Water penetration through fixed glazing and framing areas.
e. Failure of operating components.

2. Warranty Period: Ten (10) years from date of Substantial Completion.

B. Special Finish Warranty: Standard form in which manufacturer agrees to repair finishes or replace aluminum that shows evidence of deterioration of factory-applied finishes within specified warranty period.

1. Deterioration includes, but is not limited to, the following:

a. Color fading more than 5 Hunter units when tested according to ASTM D 2244.
b. Chalking in excess of a No. 8 rating when tested according to ASTM D 4214.
c. Cracking, checking, peeling, or failure of paint to adhere to bare metal.

2. Warranty Period: Twenty (20) years from date of Substantial Completion.

PART 2 - PRODUCTS

2.1 PERFORMANCE REQUIREMENTS

A. General Performance: Comply with performance requirements specified, as determined by testing of glazed aluminum curtain walls representing those indicated for this Project without failure due to defective manufacture, fabrication, installation, or other defects in construction.

1. Glazed aluminum curtain walls shall withstand movements of supporting structure including, but not limited to, story drift, twist, column shortening, long-term creep, and deflection from uniformly distributed and concentrated live loads.
2. Failure also includes the following:

a. Thermal stresses transferring to building structure.
b. Glass breakage.
c. Noise or vibration created by wind and thermal and structural movements.
d. Loosening or weakening of fasteners, attachments, and other components.
e. Failure of operating units.

B. Structural Loads:

1. Wind Loads: As indicated on Drawings.
2. Other Design Loads: As indicated on Drawings.

C. Deflection of Framing Members: At design wind pressure, as follows:

1. Deflection Normal to Wall Plane: Limited to 1/175 of clear span for spans up to 13 feet 6 inches and to 1/240 of clear span plus ¼ inch for spans greater than 13 feet 6 inches or an amount that restricts edge deflection of individual glazing lites to ¾ inch, whichever is less.
2. Deflection Parallel to Glazing Plane: Limited to 1/360 of clear span or 1/8 inch, whichever is smaller.

    a. Operable Units: Provide a minimum 1/16-inch clearance between framing members and operable units.

D. Structural: Test according to ASTM E 330 as follows:

1. When tested at positive and negative wind-load design pressures, assemblies do not evidence deflection exceeding specified limits.
2. When tested at one hundred fifty percent (150%) of positive and negative wind-load design pressures, assemblies, including anchorage, do not evidence material failures, structural distress, or permanent deformation of main framing members exceeding 0.2 percent of span.
3. Test Durations: As required by design wind velocity, but not less than ten (10) seconds.

E. Air Infiltration: Test according to ASTM E 283 for infiltration as follows:

1. Fixed Framing and Glass Area:

    a. Maximum air leakage of 0.06 cfm/sq. ft. at a static-air-pressure differential of 1.57 lbf/sq. ft.

F. Water Penetration under Static Pressure: Test according to ASTM E 331 as follows:

1. No evidence of water penetration through fixed glazing and framing areas when tested according to a minimum static-air-pressure differential of twenty percent (20%) of positive wind-load design pressure, but not less than 6.24 lbf/sq. ft.

G. Seismic Performance: Glazed aluminum curtain walls shall withstand the effects of earthquake motions determined according to ASCE/SEI 7.

H. Energy Performance: Certify and label energy performance according to NFRC as follows:

1. Thermal Transmittance (U-factor): Fixed glazing and framing areas shall have U-factor of not more than 0.42 Btu/sq. ft. x h x deg F as determined according to NFRC 100.
2. Solar Heat Gain Coefficient: Fixed glazing and framing areas shall have a solar heat gain coefficient of no greater than 0.40 as determined according to NFRC 200.

I. Thermal Movements: Allow for thermal movements resulting from ambient and surface temperature changes:

1. Temperature Change: 120 deg F (67 deg C), ambient; 180 deg F (100 deg C), material surfaces.

2.2 MANUFACTURERS

A. Basis-of-Design Product:

1. EFCO Corporation; **Series 5600 2¼ inch with Concealed Vent**

B. Manufacturers: Subject to compliance with requirements, available manufacturers offering products that may be incorporated into the Work include, but are not limited to, the following:

1. Kawneer North America
2. Oldcastle BuildingEnvelope
3. TRACO
4. YKK AP America Inc.
5. Substitutions: Under provisions of Section 012500 “Substitution Procedures”.

C. Source Limitations: Obtain all components of curtain wall system, including framing, venting windows, entrances and accessories, from single manufacturer.

2.3 FRAMING

A. Framing Members: Manufacturer's extruded- or formed-aluminum framing members of thickness required and reinforced as required to support imposed loads.

1. Construction: Thermally broken.
2. Glazing System: Retained mechanically with gaskets on four (4) sides.
3. Glazing Plane: Front.
4. Finish: High-performance organic finish.
5. Fabrication Method: Factory-fabricated unit and mullion system.

B. Pressure Caps: Manufacturer's standard aluminum components that mechanically retain glazing.

1. Include snap-on aluminum trim that conceals fasteners.

C. Brackets and Reinforcements: Manufacturer's standard high-strength aluminum with nonstaining, nonferrous shims for aligning system components.

D. Materials:

1. Aluminum: Alloy and temper recommended by manufacturer for type of use and finish indicated.

   a. Sheet and Plate: ASTM B 209.
   b. Extruded Bars, Rods, Profiles, and Tubes: ASTM B 221.

2. Steel Reinforcement: Manufacturer's standard zinc-rich, corrosion-resistant primer complying with SSPC-PS Guide No. 12.00; applied immediately after surface preparation and pretreatment. Select surface preparation methods according to recommendations in SSPC-SP COM, and prepare surfaces according to applicable SSPC standard.

   a. Cold-Rolled Sheet and Strip: ASTM A 1008.
   b. Hot-Rolled Sheet and Strip: ASTM A 1011.

2.4 VENTING WINDOWS

A. Aluminum Windows: AAMA/WDMA/CSA 101/I.S.2/A440, manufacturer's standard, with self-flashing mounting fins, and as follows:

1. Window Type: Project-out (awning).
2. Minimum Performance Class: CW.
3. Minimum Performance Grade: 30.
4. Aluminum Extrusions: ASTM B 221, alloy and temper recommended by manufacturer for strength, corrosion resistance, and application of required finish, but not less than 0.064-inch thickness at any location for main frame and sash members.

    a. Thermally Improved Construction: Fabricate window units with an integral, concealed, low-conductance thermal barrier; located between exterior materials and window members exposed on interior side; in a manner that eliminates direct metal-to-metal contact.

5. Mullions: Between adjacent windows, fabricated of extruded aluminum matching finish of window units.
6. Fasteners, Anchors, and Clips: Nonmagnetic stainless steel, aluminum, or other noncorrosive material, compatible with aluminum window members, trim, hardware, anchors, and other components of window units. Fasteners shall not be exposed, except for attaching hardware.

    a. Reinforcement: Where fasteners screw-anchor into aluminum less than 0.128 inch thick, reinforce interior with aluminum or nonmagnetic stainless steel to receive screw threads, or provide standard, noncorrosive, pressed-in, spline grommet nuts.

7. Hardware: Manufacturer's standard; of aluminum, stainless steel, die-cast steel, malleable iron, or bronze; including the following:

    a. Cam-action sweep sash lock and keeper at meeting rails. Provide operators that function without requiring the removal of interior screens, using wickets where required.
    b. Pole-operated, cam-action locking device on meeting rail where rail is more than 72 inches above floor. One (1) pole and pole hanger per room where required.
    c. Concealed steel or bronze operating arms, non-friction type, not less than two (2) per sash.

8. Weather Stripping: Woven-pile weather stripping of wool, polypropylene, or nylon pile and resin-impregnated backing fabric; complying with AAMA 701/702.
9. Insect Screens: Provide removable insect screen on each operable exterior sash, with screen frame finished to match window unit, complying with SMA 1004 or SMA 1201, and as follows:

    a. Aluminum Wire Fabric: 18-by-18 mesh of 0.013-inch-diameter, coated aluminum wire.

B. Glazing: Same as adjacent glazed aluminum curtain-wall glazing.

C. Finish: Match adjacent glazed aluminum curtain-wall finish.

2.5 ENTRANCES

A. Entrances: Comply with Section 084113 "Aluminum-Framed Entrances and Storefronts."

2.6 GLAZING

A. Glazing: Comply with Section 088000 "Glazing."

B. Glazing Gaskets: Manufacturer's standard sealed-corner pressure-glazing system of black, resilient elastomeric glazing gaskets, setting blocks, and shims or spacers.

C. Glazing Sealants: As recommended by manufacturer.

D. Sealants used inside the weatherproofing system shall have a VOC content of 250 g/L or less.

2.7 ACCESSORIES

A. Fasteners and Accessories: Manufacturer's standard corrosion-resistant, nonstaining, nonbleeding fasteners and accessories compatible with adjacent materials.

1. Use self-locking devices where fasteners are subject to loosening or turning out from thermal and structural movements, wind loads, or vibration.
2. Reinforce members as required to receive fastener threads.
3. Use exposed fasteners with countersunk Phillips screw heads, fabricated from 300 series stainless steel.

B. Anchors: Three-way adjustable anchors with minimum adjustment of 1 inch that accommodate fabrication and installation tolerances in material and finish compatible with adjoining materials and recommended by manufacturer.

1. Concrete and Masonry Inserts: Hot-dip galvanized cast-iron, malleable-iron, or steel inserts complying with ASTM A 123 or ASTM A 153 requirements.

C. Concealed Flashing: Manufacturer's standard corrosion-resistant, nonstaining, nonbleeding flashing compatible with adjacent materials.

D. Bituminous Paint: Cold-applied asphalt-mastic paint complying with SSPC-Paint 12 requirements except containing no asbestos, formulated for 30-mil thickness per coat.

2.8 FABRICATION

A. Form or extrude aluminum shapes before finishing.

B. Weld in concealed locations to greatest extent possible to minimize distortion or discoloration of finish. Remove weld spatter and welding oxides from exposed surfaces by descaling or grinding.

C. Fabricate components that, when assembled, have the following characteristics:

1. Profiles that are sharp, straight, and free of defects or deformations.
2. Accurately fitted joints with ends coped or mitered.
3. Physical and thermal isolation of glazing from framing members.

4. Accommodations for thermal and mechanical movements of glazing and framing to maintain required glazing edge clearances.
5. Provisions for field replacement of glazing from exterior.
6. Fasteners, anchors, and connection devices that are concealed from view to greatest extent possible.

D. Fabricate components to resist water penetration as follows:

1. Internal guttering system or other means to drain water passing joints, condensation occurring within framing members, and moisture migrating within glazed aluminum curtain wall to exterior.

E. Curtain-Wall Framing: Fabricate components for assembly using manufacturer's standard assembly method.

F. Factory-Assembled Frame Units:

1. Rigidly secure nonmovement joints.
2. Prepare surfaces that are in contact structural sealant according to sealant manufacturer's written instructions to ensure compatibility and adhesion.
3. Preparation includes, but is not limited to, cleaning and priming surfaces.
4. Seal joints watertight unless otherwise indicated.
5. Install glazing to comply with requirements in Section 088000 "Glazing."

G. After fabrication, clearly mark components to identify their locations in Project according to Shop Drawings.

2.9 ALUMINUM FINISHES

A. High-Performance Organic Finish: Two-coat fluoropolymer finish complying with AAMA 2605 and containing not less than seventy percent (70%) PVDF resin by weight in color coat. Prepare, pretreat, and apply coating to exposed metal surfaces to comply with coating and resin manufacturers' written instructions.

1. Color and Gloss: As selected by Architect and Owner from manufacturer's full range.

PART 3 - EXECUTION

3.1 EXAMINATION

A. Examine areas, with Installer present, for compliance with requirements for installation tolerances and other conditions affecting performance of the Work.

B. Proceed with installation only after unsatisfactory conditions have been corrected.

3.2 INSTALLATION

A. General:

1. Comply with manufacturer's written instructions.
2. Do not install damaged components.

3. Fit joints to produce hairline joints free of burrs and distortion.
4. Rigidly secure nonmovement joints.
5. Install anchors with separators and isolators to prevent metal corrosion and electrolytic deterioration and to prevent impeding movement of moving joints.
6. Where welding is required, weld components in concealed locations to minimize distortion or discoloration of finish. Protect glazing surfaces from welding.
7. Seal joints watertight unless otherwise indicated.

B. Metal Protection:

1. Where aluminum is in contact with dissimilar metals, protect against galvanic action by painting contact surfaces with primer, applying sealant or tape, or installing nonconductive spacers as recommended by manufacturer for this purpose.
2. Where aluminum is in contact concrete or masonry, protect against corrosion by painting contact surfaces with bituminous paint.

C. Install components to drain water passing joints, condensation occurring within framing members, and moisture migrating within glazed aluminum curtain wall to exterior.

D. Install components plumb and true in alignment with established lines and grades.

E. Install operable units level and plumb, securely anchored, and without distortion. Adjust weather-stripping contact and hardware movement to produce proper operation.

3.3 ERECTION TOLERANCES

A. Erection Tolerances: Install glazed aluminum curtain walls to comply with the following maximum tolerances:

1. Plumb: 1/8 inch in 10 feet; ¼ inch in 40 feet.
2. Level: 1/8 inch in 20 feet; ¼ inch in 40 feet.
3. Alignment:

   a. Where surfaces abut in line or are separated by reveal or protruding element up to ½ inch wide, limit offset from true alignment to 1/16 inch.
   b. Where surfaces are separated by reveal or protruding element from ½ to 1 inch wide, limit offset from true alignment to 1/8 inch.
   c. Where surfaces are separated by reveal or protruding element of 1 inch wide or more, limit offset from true alignment to ¼ inch.

4. Location: Limit variation from plane to 1/8 inch in 12 feet; ½ inch over total length.

END OF SECTION 084413

SECTION 087100 - DOOR HARDWARE

PART 1 - GENERAL

1.1 RELATED DOCUMENTS

A. Drawings and general provisions of the Contract, including General and Supplementary Conditions and Division 01 Specification Sections, apply to this Section.

1.2 SUMMARY

A. Section includes:

1. Mechanical door hardware for the following:

   a. Swinging doors.

2. Cylinders for door hardware specified in other Sections.
3. Electrified door hardware.

B. Related Sections:

1. Section 081113 "Hollow Metal Doors and Frames" for door silencers provided as part of hollow-metal frames.
2. Section 081416 "Flush Wood Doors".
3. Section 083113 "Access Doors and Frames" for access door hardware, including cylinders.
4. Section 083473 “Sound Control Door Assemblies” for hinges and gasketing provided as part of sound-rated door assemblies.
5. Section 084113 "Aluminum-Framed Entrances and Storefronts" for installation of entrance door hardware, except cylinders.
6. Section 281300 "Access Control" for access control devices installed at door openings and provided as part of a security system.
7. Section 281600 "Intrusion Detection" for detection devices installed at door openings and provided as part of an intrusion-detection system.
8. Section 283111 "Digital, Addressable Fire-Alarm System" for connections to building fire-alarm system.

1.3 ACTION SUBMITTALS

A. Product Data: For each type of product indicated. Include construction and installation details, material descriptions, dimensions of individual components and profiles, and finishes.

B. Shop Drawings: Details of electrified door hardware, indicating the following:

1. Wiring Diagrams: For power, signal, and control wiring and including the following:

   a. Details of interface of electrified door hardware and building safety and security systems.
   b. Schematic diagram of systems that interface with electrified door hardware.

c. Point-to-point wiring.
d. Risers.
e. Elevations doors controlled by electrified door hardware.

2. Operation Narrative: Describe the operation of doors controlled by electrified door hardware.

C. Other Action Submittals:

1. Door Hardware Schedule: Prepared by or under the supervision of Installer, detailing fabrication and assembly of door hardware, as well as installation procedures and diagrams. Coordinate final door hardware schedule with doors, frames, and related work to ensure proper size, thickness, hand, function, and finish of door hardware.

a. Submittal Sequence: Submit door hardware schedule concurrent with submissions of Product Data. Coordinate submission of door hardware schedule with scheduling requirements of other work to facilitate the fabrication of other work that is critical in Project construction schedule.
b. Format: Use same scheduling sequence and format and use same door numbers as in the Contract Documents.
c. Content: Include the following information:

1) Identification number, location, hand, fire rating, size, and material of each door and frame.
2) Locations of each door hardware set, cross-referenced to Drawings on floor plans and to door and frame schedule.
3) Complete designations, including name and manufacturer, type, style, function, size, quantity, function, and finish of each door hardware product.
4) Description of electrified door hardware sequences of operation and interfaces with other building control systems.
5) Fastenings and other pertinent information.
6) Explanation of abbreviations, symbols, and codes contained in schedule.
7) Mounting locations for door hardware.
8) List of related door devices specified in other Sections for each door and frame.

2. Keying Schedule: Prepared by or under the supervision of Installer, detailing Owner's final keying instructions for locks. Include schematic keying diagram and index each key set to unique door designations that are coordinated with the Contract Documents.

1.4 INFORMATIONAL SUBMITTALS

A. Qualification Data: For Installer.

B. Product Certificates: For electrified door hardware, from the manufacturer.

1. Certify that door hardware approved for use on types and sizes of labeled fire-rated doors complies with listed fire-rated door assemblies.

C. Product Test Reports: For compliance with accessibility requirements, based on evaluation of comprehensive tests performed by manufacturer and witnessed by a qualified testing agency, for door hardware on doors located in accessible routes.

D. Warranty: Special warranty specified in this Section.

1.5 CLOSEOUT SUBMITTALS

A. Maintenance Data: For each type of door hardware to include in maintenance manuals. Include final hardware and keying schedule.

1.6 QUALITY ASSURANCE

A. Installer Qualifications: Supplier of products and an employer of workers trained and approved by product manufacturers who is available during the course of the Work to consult with Contractor, Architect, and Owner about door hardware and keying.

1. Warehousing Facilities: In Project's vicinity.
2. Scheduling Responsibility: Preparation of door hardware and keying schedules.
3. Engineering Responsibility: Preparation of data for electrified door hardware, including Shop Drawings, based on testing and engineering analysis of manufacturer's standard units in assemblies similar to those indicated for this Project.

B. Source Limitations: Obtain each type of door hardware from a single manufacturer.

C. Fire-Rated Door Assemblies: Where fire-rated door assemblies are indicated, provide door hardware rated for use in assemblies complying with NFPA 80 that are listed and labeled by a qualified testing agency, for fire-protection ratings indicated, based on testing at positive pressure according to NFPA 252 or UL 10C, unless otherwise indicated.

D. Smoke- and Draft-Control Door Assemblies: Where smoke- and draft-control door assemblies are required, provide door hardware that meet requirements of assemblies tested according to UL 1784 and installed in compliance with NFPA 105.

1. Air Leakage Rate: Maximum air leakage of0.3 cfm/sq. ft. at the tested pressure differential of 0.3-inch wg of water.

E. Electrified Door Hardware: Listed and labeled as defined in NFPA 70, Article 100, by a testing agency acceptable to authorities having jurisdiction.

F. Means of Egress Doors: Latches do not require more than 15 lbf to release the latch. Locks do not require use of a key, tool, or special knowledge for operation.

G. Accessibility Requirements: For door hardware on doors in an accessible route, comply with the U.S. Architectural & Transportation Barriers Compliance Board's ADA-ABA Accessibility Guidelines and ICC/ANSI A117.1.

1. Provide operating devices that do not require tight grasping, pinching, or twisting of the wrist and that operate with a force of not more than 5 lbf.
2. Comply with the following maximum opening-force requirements:

a. Interior, Non-Fire-Rated Hinged Doors: 5 lbf applied perpendicular to door.
b. Fire Doors: Minimum opening force allowable by authorities having jurisdiction.

3. Bevel raised thresholds with a slope of not more than 1:2. Provide thresholds not more than ½ inch high.
4. Adjust door closer sweep periods so that, from an open position of 70 degrees, the door will take at least three (3) seconds to move to a point 3 inches from the latch, measured to the leading edge of the door.

H. Keying Conference: Conduct conference at Project site." In addition to Owner**,** Contractor, and Architect, conference participants shall also include Installer's Architectural Hardware Consultant. Incorporate keying conference decisions into final keying schedule after reviewing door hardware keying system including, but not limited to, the following:

1. Function of building, flow of traffic, purpose of each area, degree of security required, and plans for future expansion.
2. Preliminary key system schematic diagram.
3. Requirements for key control system.
4. Requirements for access control.
5. Address for delivery of keys.

I. Preinstallation Conference: Conduct conference at Project site.

1. Review and finalize construction schedule and verify availability of materials, Installer's personnel, equipment, and facilities needed to make progress and avoid delays.
2. Inspect and discuss preparatory work performed by other trades.
3. Review required testing, inspecting, and certifying procedures.

1.7 DELIVERY, STORAGE, AND HANDLING

A. Inventory door hardware on receipt and provide secure lock-up for door hardware delivered to Project site.

B. Tag each item or package separately with identification coordinated with the final door hardware schedule, and include installation instructions, templates, and necessary fasteners with each item or package.

C. Deliver keys to Owner by registered mail or overnight package service.

1.8 COORDINATION

A. Installation Templates: Distribute for doors, frames, and other work specified to be factory prepared. Check Shop Drawings of other work to confirm that adequate provisions are made for locating and installing door hardware to comply with indicated requirements.

B. Security: Coordinate installation of door hardware, keying, and access control with Owner's security consultant.

C. Electrical System Roughing-In: Coordinate layout and installation of electrified door hardware with connections to power supplies and building safety and security systems.

D. Existing Openings: Where hardware components are scheduled for application to existing construction or where modifications to existing door hardware are required, field verify existing conditions and coordinate installation of door hardware to suit opening conditions and to provide proper door operation.

1.9 WARRANTY

A. Special Warranty: Manufacturer's standard form in which manufacturer agrees to repair or replace components of door hardware that fail in materials or workmanship within specified warranty period.

1. Failures include, but are not limited to, the following:

a. Structural failures including excessive deflection, cracking, or breakage.
b. Faulty operation of doors and door hardware.
c. Deterioration of metals, metal finishes, and other materials beyond normal weathering and use.

2. Warranty Period: Three (3) years from date of Substantial Completion, unless otherwise indicated.

a. Exit Devices: Two (2) years from date of Substantial Completion.
b. Manual Closers: Ten (10) years from date of Substantial Completion.

1.10 MAINTENANCE SERVICE

A. Maintenance Tools and Instructions: Furnish a complete set of specialized tools and maintenance instructions for Owner's continued adjustment, maintenance, and removal and replacement of door hardware.

B. Maintenance Service: Beginning at Substantial Completion, provide six (6) months' full maintenance by skilled employees of door hardware Installer. Include quarterly preventive maintenance, repair or replacement of worn or defective components, lubrication, cleaning, and adjusting as required for proper door and door hardware operation. Provide parts and supplies that are the same as those used in the manufacture and installation of original products.

PART 2 - PRODUCTS

2.1 SCHEDULED DOOR HARDWARE

A. Provide door hardware for each door as scheduled in Part 3 "Door Hardware Schedule" Article to comply with requirements in this Section.

1. Door Hardware Sets: Provide quantity, item, size, finish or color indicated, and products equivalent in function and comparable in quality to named products, where allowed.
2. Sequence of Operation: Provide electrified door hardware function, sequence of operation, and interface with other building control systems indicated.

B. Designations: Requirements for design, grade, function, finish, size, and other distinctive qualities of each type of door hardware are indicated in Part 3 "Door Hardware Schedule" Article. Products are identified by using door hardware designations, as follows:

1. Named Manufacturers' Products: Manufacturer and product designation are listed for each door hardware type required for the purpose of establishing minimum requirements. Manufacturers' names are abbreviated in Part 3 "Door Hardware Schedule" Article.

2.2 HINGES

A. Hinges: BHMA A156.1. Provide template-produced hinges for hinges installed on hollow-metal doors and hollow-metal frames

1. Basis of Design:

a. Stanley Commercial Hardware; Div. of The Stanley Works; **CB179**

2. Manufacturers: Subject to compliance with requirements, available manufacturers offering products that may be incorporated into the Work include, but are not limited to, the following:

a. Hager Companies.
b. McKinney Products Company; an ASSA ABLOY Group company.
c. Substitutions: Under provisions of Section 012500 “Substitution Procedures”.

2.3 CONTINUOUS HINGES

A. Continuous Hinges: BHMA A156.26; minimum 0.120-inch-thick, hinge leaves with minimum overall width of 4 inches; fabricated to full height of door and frame and to template screw locations; with components finished after milling and drilling are complete.

B. Pin-and-Barrel-Type Hinges:

1. Basis-of-Design:

a. Markar Architectural Products, Inc.; a subsidiary of Adams Rite Manufacturing Co.

2. Manufacturers: Subject to compliance with requirements, available manufacturers offering products that may be incorporated into the Work include, but are not limited to, the following:

a. Hager Companies.
b. McKinney Products Company; an ASSA ABLOY Group company.
c. Substitutions: Under provisions of Section 012500 “Substitution Procedures”.

2.4 MECHANICAL LOCKS AND LATCHES

A. Lock Functions: As indicated in Part 3 “Door Hardware Schedule”.

B. Lock Throw: Comply with testing requirements for length of bolts required for labeled fire doors, and as follows:

1. Bored Locks: Minimum ½-inch latchbolt throw.
2. Mortise Locks: Minimum ¾-inch latchbolt throw.

C. Lock Backset: 2¾ inches, unless otherwise indicated.

D. Lock Trim:

1. Levers: Cast.
2. Escutcheons (Roses): Wrought.
3. Dummy Trim: Match lever lock trim and escutcheons.
4. Operating Device: Lever with escutcheons (roses).

E. Strikes: Provide manufacturer's standard strike for each lock bolt or latchbolt complying with requirements indicated for applicable lock or latch and with strike box and curved lip extended to protect frame; finished to match lock or latch.

1. Flat-Lip Strikes: For locks with three-piece antifriction latchbolts, as recommended by manufacturer.
2. Extra-Long-Lip Strikes: For locks used on frames with applied wood casing trim.

F. Bored Locks: BHMA A156.2; Grade 1; Series 4000.

1. Basis of Design:

a. Schlage Commercial Lock Division; an Ingersoll-Rand company; **ND Series – Rhodes, Vandlgard** functions

2. Manufacturers: Subject to compliance with requirements, available manufacturers offering products that may be incorporated into the Work include, but are not limited to, the following:

a. Corbin Russwin Architectural Hardware; n ASSA ABLOY Group Company.
b. Medeco Security Locks, Inc.; an ASSA ABLOY Group company.
c. SARGENT Manufacturing Company; an ASSA ABLOY Group company.
d. Substitutions: Under provisions of Section 012500 “Substitution Procedures”.

2.5 ELECTRIC STRIKES

A. Electric Strikes: BHMA A156.31; Grade 1; solenoid powered, DC units, fail/safe option, 24 volts DC for doors, with faceplate to suit lock and frame. Provide compatible power supply and coordinate installation with electrical work.

1. Basis-of-Design Product:

a. Adams Rite Manufacturing Co.; an ASSA ABLOY Group company; **Series 7000**

2. Manufacturers: Subject to compliance with requirements, available manufacturers offering products that may be incorporated into the Work include, but are not limited to, the following:

a. Folger Adam Electric Door Controls; an ASSA ABLOY Group company.
b. Substitutions: Under provisions of Section 012500 “Substitution Procedures”.

2.6 MANUAL FLUSH BOLTS

A. Manual Flush Bolts: BHMA A156.16; minimum ¾-inch throw.

1. Basis-of-Design Product:

a. Door Controls International, Inc.; **790F,** designed for mortising into door edge.

2. Manufacturers: Subject to compliance with requirements, available manufacturers offering products that may be incorporated into the Work include, but are not limited to, the following:

a. Glynn-Johnson; an Ingersoll-Rand company.
b. IVES Hardware; an Ingersoll-Rand company.
c. Substitutions: Under provisions of Section 012500 “Substitution Procedures”.

2.7 EXIT DEVICES AND AUXILIARY ITEMS

A. Exit Devices and Auxiliary Items: BHMA A156.3.

1. Basis-of-Design Product:

a. Von Duprin; an Ingersoll-Rand company; **Series 99L** and **99L-F**
b. No substitutions.

B. Coordinate exit device operation with cylinder locks where specified.

C. Interior panic hardware shall be cut ½ width of door from latch side only.

D. All exit devices shall be provided with cylinder dogging hardware for manual keying.

E. At paired exit device doors, provide keyed removable mullions similar to Von Duprin steel mullion, **Model #9954**.

2.8 LOCK CYLINDERS

A. Lock Cylinders: Tumbler type, constructed from brass or bronze, stainless steel, or nickel silver.

1. Manufacturer: Same manufacturer as for locking devices.

B. Standard Lock Cylinders: BHMA A156.5; Grade 1; permanent cores that are removable; face finished to match lockset.

C. Construction Cores: Provide construction cores that are replaceable by permanent cores. Provide ten (10) construction master keys.

2.9 KEYING

A. Keying System: Factory registered, complying with guidelines in BHMA A156.28, Appendix A. Incorporate decisions made in keying conference.

1. Great-Grand Master Key System: Change keys, a master key, a grand master key, and a great-grand master key operate cylinders.

B. Keys: Brass.

1. Stamping: Permanently inscribe each key with a visual key control number and include the following notation:

a. Notation: "DO NOT DUPLICATE."

2. Quantity: In addition to one (1) extra key blank for each lock, provide the following:

a. Great-Grand Master Keys: Five (5).

2.10 KEY CONTROL SYSTEM

A. Key Control Cabinet: BHMA A156.5; metal cabinet with baked-enamel finish; containing key-holding hooks, labels, two (2) sets of key tags with self-locking key holders, key-gathering envelopes, and temporary and permanent markers; with key capacity of one hundred fifty percent (150%) of the number of locks.

1. Manufacturers: Subject to compliance with requirements, available manufacturers offering products that may be incorporated into the Work include, but are not limited to, the following:

a. American Key Boxes and Cabinets.
b. GE Security, Inc.
c. Lund Equipment Co., Inc.
d. Substitutions: Under provisions of Section 012500 “Substitution Procedures”.

2. Wall-Mounted Cabinet: Cabinet with hinged-panel door equipped with key-holding panels and pin-tumbler cylinder door lock.

2.11 OPERATING TRIM

A. Operating Trim: BHMA A156.6; stainless steel, unless otherwise indicated.

1. Basis-of-Design Product:

a. Rockwood Manufacturing Company

1) Push Plates: **70C 4x16**
2) Pulls: **RM4410-12**

2. Manufacturers: Subject to compliance with requirements, available manufacturers offering products that may be incorporated into the Work include, but are not limited to, the following:

a. Burns Manufacturing Incorporated
b. IVES Hardware; an Ingersoll-Rand company
c. Substitutions: Under provisions of Section 012500 “Substitution Procedures”.

2.12 ACCESSORIES FOR PAIRS OF DOORS

A. Coordinators: BHMA A156.3; consisting of active-leaf, hold-open lever and inactive-leaf release trigger; fabricated from steel with nylon-coated strike plates; with built-in, adjustable safety release.

B. Carry-Open Bars: BHMA A156.3; prevent the inactive leaf from opening before the active leaf; provide polished brass or bronze carry-open bars with strike plate for inactive leaves of pairs of doors unless automatic or self-latching bolts are used.

C. Astragals: BHMA A156.22.

2.13 SURFACE CLOSERS

A. Surface Closers: BHMA A156.4; rack-and-pinion hydraulic type with adjustable sweep and latch speeds controlled by key-operated valves and forged-steel main arm. Comply with manufacturer's written recommendations for size of door closers depending on size of door, exposure to weather, and anticipated frequency of use. Provide factory-sized closers, adjustable to meet field conditions and requirements for opening force.

1. Basis-of-Design Product:

a. LCN Closers; an Ingersoll-Rand company; **4040 Series**
b. No substitutions.

B. Door closers, marked closer, shall be **Smoothee** series, with delayed action cylinder, sized to the door leaf size.

C. Door closers, marked closer/stop shall be **Cush-N-Stop** series, with delayed action cylinder, sized to the door leaf size.

D. Door closers are to be mounted on the least conspicuous side of the door. The hardware supplier shall consult with the Architect to verify applications, and note mounting locations on the hardware schedule.

2.14 POWER OPERATOR

A. Active Leaf: Gyro Tech **Model 710** Gemini automatic swing door operator. Provide with two (2) wall mounted 6 inch diameter "Push to Open" paddles and switches, mounted as required by the ADA. Coordinate installation with electrical work.

2.15 MECHANICAL STOPS AND HOLDERS

A. Wall- and Floor-Mounted Stops: BHMA A156.16; polished cast brass, bronze, or aluminum base metal.

1. Basis-of-Design Product:

a. IVES Hardware; an Ingersoll-Rand company; **407 and 436 or 438**

1) Provide wall bumpers wherever possible. Provide floor stops where the use of wall bumpers is not feasible, provided the location of the stop is not a stumbling hazard or would cause the door to rack at the hinges.

2. Manufacturers: Subject to compliance with requirements, available manufacturers offering products that may be incorporated into the Work include, but are not limited to, the following:

a. Glynn-Johnson; an Ingersoll-Rand company.
b. Door Controls International, Inc.
c. Substitutions: In accordance with Section 012500 “Substitution Procedures”.

2.16 OVERHEAD STOPS AND HOLDERS

A. Overhead Stops and Holders: BHMA A156.8.

1. Basis-of-Design Product:

a. Glynn-Johnson; an Ingersoll-Rand company; **90S**

2. Manufacturers: Subject to compliance with requirements, available manufacturers offering products that may be incorporated into the Work include, but are not limited to, the following:

a. Architectural Builders Hardware Mfg., Inc.
b. Rockwood Manufacturing Company.
c. SARGENT Manufacturing Company; an ASSA ABLOY Group company.
d. Substitutions: In accordance with Section 012500 “Substitution Procedures”.

2.17 SMOKE SEALS (SMOKE AND FIRE RATED DOORS)

1. Basis-of-Design Product:

a. Pemko Manufacturing Co.; an ASSA ABLOY Group company

1) Smoke Rated Doors: **S88D** at the jambs and heads.
2) Fire Rated Doors: Provided by the door manufacturer.

2. Manufacturers: Subject to compliance with requirements, available manufacturers offering products that may be incorporated into the Work include, but are not limited to, the following:

a. National Guard Products.
b. Zero International.
c. Substitutions: In accordance with Section 012500 “Substitution Procedures”.

2.18 WEATHERSTRIPPING (DOOR GASKETING)

A. Door Gasketing: BHMA A156.22; air leakage not to exceed 0.50 cfm per foot of crack length for gasketing other than for smoke control, as tested according to ASTM E 283; with resilient or flexible seal strips that are easily replaceable and readily available from stocks maintained by manufacturer.

1. Basis-of-Design Product:

   a. Zero International

      1) Head and Jamb: **#328AA**, solid neoprene in an extruded aluminum housing.
      2) Sill: **#339AA** with extruded aluminum housing, solid neoprene.

2. Manufacturers: Subject to compliance with requirements, available manufacturers offering products that may be incorporated into the Work include, but are not limited to, the following:

   a. National Guard Products.
   b. Pemko Manufacturing Co.; an ASSA ABLOY Group company.
   c. Substitutions: In accordance with Section 012500 “Substitution Procedures”.

2.19 THRESHOLDS

A. Thresholds: BHMA A156.21; fabricated to full width of opening indicated.

1. Basis-of-Design Product:

   a. Pemko Manufacturing Co.; an ASSA ABLOY Group company; **2005AT**

2. Manufacturers: Subject to compliance with requirements, available manufacturers offering products that may be incorporated into the Work include, but are not limited to, the following:

   a. National Guard Products.
   b. Zero International.
   c. Substitutions: In accordance with Section 012500 “Substitution Procedures”.

2.20 METAL PROTECTIVE TRIM UNITS

A. Metal Protective Trim Units: BHMA A156.6; fabricated from 0.050-inch-thick stainless steel; with manufacturer's standard machine or self-tapping screw fasteners.

1. Basis-of-Design Product: Burns Manufacturing Incorporated

   a. Kick Plates: 16 inches high.
   b. All plates are 2 inches less width of door on single doors, 1 inch less width of door on pairs.

2. Manufacturers: Subject to compliance with requirements, available manufacturers offering products that may be incorporated into the Work include, but are not limited to, the following:

   a. IVES Hardware; an Ingersoll-Rand company.
   b. Rockwood Manufacturing Company.
   c. Substitutions: In accordance with Section 012500 “Substitution Procedures”.

2.21 AUXILIARY DOOR HARDWARE

A. Auxiliary Hardware: BHMA A156.16.

1. Manufacturers: Subject to compliance with requirements, available manufacturers offering products that may be incorporated into the Work include, but are not limited to, the following:

   a. Hager Companies.
   b. Rockwood Manufacturing Company.
   c. Stanley Commercial Hardware; Div. of The Stanley Works.
   d. Substitutions: In accordance with Section 012500 “Substitution Procedures”.

2.22 AUXILIARY ELECTRIFIED DOOR HARDWARE

A. Auxiliary Electrified Door Hardware:

1. Manufacturers: Subject to compliance with requirements, available manufacturers offering products that may be incorporated into the Work include, but are not limited to, the following:

   a. GE Security, Inc.
   b. SARGENT Manufacturing Company; an ASSA ABLOY Group company.
   c. Schlage Commercial Lock Division; an Ingersoll-Rand company.
   d. Security Door Controls.
   e. Substitutions: In accordance with Section 012500 “Substitution Procedures”.

2.23 FABRICATION

A. Base Metals: Produce door hardware units of base metal indicated, fabricated by forming method indicated, using manufacturer's standard metal alloy, composition, temper, and hardness. Furnish metals of a quality equal to or greater than that of specified door hardware units and BHMA A156.18.

B. Fasteners: Provide door hardware manufactured to comply with published templates prepared for machine, wood, and sheet metal screws. Provide screws that comply with commercially recognized industry standards for application intended, except aluminum fasteners are not permitted. Provide Phillips flat-head screws with finished heads to match surface of door hardware, unless otherwise indicated.

1. Concealed Fasteners: For door hardware units that are exposed when door is closed, except for units already specified with concealed fasteners. Do not use through bolts for installation where bolt head or nut on opposite face is exposed unless it is the only means of securely attaching the door hardware. Where through bolts are used on hollow door and frame construction, provide sleeves for each through bolt.
2. Fire-Rated Applications:

   a. Wood or Machine Screws: For the following:

      1) Hinges mortised to doors or frames; use threaded-to-the-head wood screws for wood doors and frames.

2) Strike plates to frames.
3) Closers to doors and frames.

b. Steel Through Bolts: For the following unless door blocking is provided:

1) Surface hinges to doors.
2) Closers to doors and frames.
3) Surface-mounted exit devices.

3. Spacers or Sex Bolts: For through bolting of hollow-metal doors.
4. Fasteners for Wood Doors: Comply with requirements in DHI WDHS.2, "Recommended Fasteners for Wood Doors."

2.24 FINISHES

A. Provide finishes complying with BHMA A156.18 as indicated in door hardware schedule.

B. Protect mechanical finishes on exposed surfaces from damage by applying a strippable, temporary protective covering before shipping.

C. Appearance of Finished Work: Variations in appearance of abutting or adjacent pieces are acceptable if they are within one-half of the range of approved Samples. Noticeable variations in the same piece are not acceptable. Variations in appearance of other components are acceptable if they are within the range of approved Samples and are assembled or installed to minimize contrast.

PART 3 - EXECUTION

3.1 EXAMINATION

A. Examine doors and frames, with Installer present, for compliance with requirements for installation tolerances, labeled fire-rated door assembly construction, wall and floor construction, and other conditions affecting performance.

B. Examine roughing-in for electrical power systems to verify actual locations of wiring connections before electrified door hardware installation.

C. Proceed with installation only after unsatisfactory conditions have been corrected.

3.2 PREPARATION

A. Steel Doors and Frames: For surface applied door hardware, drill and tap doors and frames according to ANSI/SDI A250.6.

B. Wood Doors: Comply with DHI WDHS.5 "Recommended Hardware Reinforcement Locations for Mineral Core Wood Flush Doors."

3.3 INSTALLATION

A. Mounting Heights: Mount door hardware units at heights to comply with the following unless otherwise indicated or required to comply with governing regulations.

1. Standard Steel Doors and Frames: ANSI/SDI A250.8.
2. Wood Doors: DHI WDHS.3, "Recommended Locations for Architectural Hardware for Wood Flush Doors."

B. Install each door hardware item to comply with manufacturer's written instructions. Where cutting and fitting are required to install door hardware onto or into surfaces that are later to be painted or finished in another way, coordinate removal, storage, and reinstallation of surface protective trim units with finishing. Do not install surface-mounted items until finishes have been completed on substrates involved.

1. Set units level, plumb, and true to line and location. Adjust and reinforce attachment substrates as necessary for proper installation and operation.
2. Drill and countersink units that are not factory prepared for anchorage fasteners. Space fasteners and anchors according to industry standards.

C. Hinges: Install types and in quantities indicated in door hardware schedule but not fewer than the number recommended by manufacturer for application indicated or one (1) hinge for every 30 inches of door height, whichever is more stringent, unless other equivalent means of support for door, such as spring hinges or pivots, are provided.

D. Lock Cylinders: Install construction cores to secure building and areas during construction period.

1. Replace construction cores with removable cores as indicated in keying schedule.
2. Furnish permanent cores to Owner for installation.

E. Key Control System: Tag keys and place them on markers and hooks in key control system cabinet, as determined by final keying schedule.

F. Boxed Power Supplies: Locate power supplies as indicated or, if not indicated, above accessible ceilings. Verify location with Architect.

1. Configuration: Provide least number of power supplies required to adequately serve doors with electrified door hardware.

G. Thresholds: Set thresholds for doors indicated in full bed of sealant complying with requirements specified in Section 079200 "Joint Sealants."

H. Stops: Provide wall or floor stops for doors unless other type stops are indicated in door hardware schedule. Do not mount floor stops where they will impede traffic.

I. Perimeter Gasketing: Apply to head and jamb, forming seal between door and frame.

J. Door Bottoms: Apply to bottom of door, forming seal with threshold when door is closed.

3.4 ADJUSTING

A. Initial Adjustment: Adjust and check each operating item of door hardware and each door to ensure proper operation or function of every unit. Replace units that cannot be adjusted to operate as intended. Adjust door control devices to compensate for final operation of heating and ventilating equipment and to comply with referenced accessibility requirements.

1. Electric Strikes: Adjust horizontal and vertical alignment of keeper to properly engage lock bolt.
2. Door Closers: Adjust sweep period to comply with accessibility requirements and requirements of authorities having jurisdiction.

3.5 CLEANING AND PROTECTION

A. Clean adjacent surfaces soiled by door hardware installation.

B. Clean operating items as necessary to restore proper function and finish.

C. Provide final protection and maintain conditions that ensure that door hardware is without damage or deterioration at time of Substantial Completion.

3.6 DOOR HARDWARE SCHEDULE

A. Provide hardware as specified in the previous articles in sets according to the following schedule and as indicated in the Door Schedule on the Drawings.

B. The hardware supplier shall meet with the Architect and/or Owner to determine lock functions and keying requirements.

HW-1

EACH TO HAVE:
- BUTTS
- 1 CLASSROOM LOCKSET
- 1 CLOSER/STOP
- 1 KICK PLATE
- SILENCERS

DOOR: A102A, B115C, B121C

HW-2

EACH TO HAVE:
- BUTTS
- 1 FACULTY RESTROOM LOCKSET
- 1 CLOSER/STOP
- 1 KICK PLATE
- SILENCERS

DOOR: A108A, B126A

HW-3

EACH TO HAVE:
- BUTTS
- 1 PUSH/PULL
- 1 CLOSER
- 1 STOP
- 1 KICK PLATE
- SILENCERS

DOOR: A109B, A112B, C112A, C113A

HW-4

EACH TO HAVE:
- BUTTS
- 1 FACULTY RESTROOM LOCKSET
- 1 CLOSER
- 1 STOP
- 1 KICK PLATE
- SILENCERS

DOOR: A11A, C114A, C115A

HW-5

EACH TO HAVE:
- BUTTS
- 1 STOREROOM LOCKSET

HW-6

EACH TO HAVE:
- CONTINUOUS HINGES
- 1 EXIT DEVICE (BLANK)

1 CLOSER
1 STOP
1 KICK PLATE
SILENCERS

DOOR: A103A, A105A, A106A, A118A, A125A, A129A, A130A, B108A, B119A, B122A, B123A, B127A, C110A, C128A

HW-7

EACH TO HAVE:
CONTINUOUS HINGES
3 EXIT DEVICES (PASSAGE)
3 CLOSERS
3 STOPS
1 THRESHOLD
1 REMOVABLE MULLION
WEATHERSTRIPPING

DOOR: B101A

HW-9

EACH TO HAVE:
BUTTS
1 EXIT DEVICE (CLASSROOM)
1 CLOSER
1 STOP
1 KICK PLATE
SMOKE SEALS

DOOR: B105A, B105B

HW-11

EACH TO HAVE:
BUTTS
1 CLASS. SECURITY LOCKSET
1 CLOSER
1 STOP
1 KICK PLATE
SILENCERS

DOOR: A126A, A131A, B102A, B129A, B129B, B130A, C135A, C136A

1 CLOSER
1 OH STOP
1 THRESHOLD
WEATHERSTRIPPING

DOOR: A121B, A122B, A123B, A124B, C117B, C120B, C122B, C125B, C126B, C129B, C130B, C132B, C133B, C134B

HW-8

EACH TO HAVE:
CONTINUOUS HINGES
2 EXIT DEVICES (PASSAGE)
2 CLOSERS
2 STOPS
1 THRESHOLD
1 REMOVABLE MULLION
WEATHERSTRIPPING

DOOR: B104A, C116A

HW-10

EACH TO HAVE:
CONTINUOUS HINGES
1 EXIT DEVICE (CLASSROOM)
1 CLOSER
1 OH STOP
1 THRESHOLD
WEATHERSTRIPPING

DOOR: B105C, B105D

HW-12

EACH TO HAVE:
BUTTS
1 CLASSROOM LOCKSET
1 CLOSER
1 STOP
1 KICK PLATE
SILENCERS

DOOR: B103A, B106A, B106C, B106D, B115A, B121A

HW-13

EACH TO HAVE:

	BUTTS
1	STOREROOM LOCKSET
1	CLOSER
1	STOP
1	KICK PLATE
1	ELECTRIC STRIKE
	CARD READER
	SILENCERS

DOOR: A119A, B131A

HW-14

EACH TO HAVE:

	CONTINUOUS HINGES
1	EXIT DEVICE (CLASSROOM)
1	CLOSER
1	OH STOP
1	THRESHOLD
1	ELECTRIC STRIKE
	CARD READER
	WEATHERSTRIPPING

DOOR: B106E

HW-15

EACH TO HAVE:

	BUTTS
1	CLASSROOM LOCKSET
1	CLOSER
1	STOP
1	KICK PLATE
	SMOKE SEALS

DOOR: B106A

HW-16

EACH TO HAVE:

	BUTTS
1	OFFICE LOCKSET
1	CLOSER
1	STOP
1	KICK PLATE
	SILENCERS

DOOR: B107A, C105A, C107A, C111A

HW-17*

EACH TO HAVE:

	CONTINUOUS HINGES
3	EXIT DEVICES (CLASSROOM)
3	CLOSERS
3	OH STOPS
2	THRESHOLDS
1	REMOVABLE MULLION
1	ELECTRIC STRIKE
1	CARD READER
	WEATHERSTRIPPING

DOOR: B00A

HW-18

EACH TO HAVE:

	BUTTS
3	EXIT DEVICES (CLASSROOM)
1	CLOSER/STOP
2	CLOSERS
2	STOPS
3	KICK PLATES
2	THRESHOLDS
1	REMOVABLE MULLION
	SMOKE SEALS

DOOR: B113A

HW-19

EACH TO HAVE:

	BUTTS
1	PRIVACY LOCKSET
1	CLOSER
1	STOP
1	KICK PLATE
	SILENCERS

HW-20

EACH TO HAVE:

	CONTINUOUS HINGES
1	EXIT DEVICE (PASSAGE)
1	CLOSER
1	STOP
1	THRESHOLD
	WEATHERSTRIPPING

DOOR: C109A

HW-21

EACH TO HAVE:

	CONTINUOUS HINGES
1	EXIT DEVICE (CLASSROOM)
1	CLOSER
1	STOP
1	THRESHOLD
1	POWER OPERATOR
1	ELECTRIC STRIKE
	WEATHERSTRIPPING

DOOR: B132A

HW-22*

EACH TO HAVE:

	CONTINUOUS HINGES
3	EXIT DEVICES (CLASSROOM)
3	CLOSERS
3	OH STOPS
3	THRESHOLDS
1	ELECTRIC STRIKE
1	CARD READER
	WEATHERSTRIPPING

DOOR: B132B

HW-23

EACH TO HAVE:

	CONTINUOUS HINGES
1	CLASSROOM LOCKSET
1	CLOSER
1	OH STOP
1	THRESHOLD
	WEATHERSTRIPPING

DOOR: C100A

HW-24

EACH TO HAVE:

	BUTTS
1	CLASS. SECURITY LOCKSET
1	CLOSER
1	STOP
1	KICK PLATE
	ACOUSTICAL SEALS

DOOR: B129C, B133B

HW-25

EACH TO HAVE:

	BUTTS
2	EXIT DEVICES (CLASSROOM)
2	CLOSERS
2	STOPS
2	KICK PLATES
1	REMOVABLE MULLION
	SMOKE SEALS

DOOR: B112A, B112B

HW-26

EACH TO HAVE:

	CONTINUOUS HINGES
2	EXIT DEVICES (BLANK)
2	CLOSERS
2	OH STOPS
1	THRESHOLD
1	REMOVABLE MULLION
	WEATHERSTRIPPING

DOOR: B118A, C106A

HW-27

EACH TO HAVE:

	CONTINUOUS HINGES
3	EXIT DEVICES (PASSAGE)
3	CLOSER/STOPS
3	THRESHOLDS
	WEATHERSTRIPPING

DOOR: B111A

HW-28

EACH TO HAVE:

	BUTTS
1	PRIVACY LOCKSET
1	CLOSER/STOP
1	KICK PLATE
	SILENCERS

DOOR: C101A

DOOR: A127A

HW-29

EACH TO HAVE:

	BUTTS
1	STOREROOM LOCKSET
1	CLOSER/STOP
1	KICK PLATE
	SILENCERS

DOOR: A104A, A107A, A110A, A128A, B124A, C104A, C145A

HW-30

EACH TO HAVE:

	BUTTS
1	OFFICE LOCKSET
1	CLOSER/STOP
1	KICK PLATE
	SILENCERS

DOOR: B116A, B125A, B133A, C102A, C137A, C139A, C140A, C143A

HW-31

EACH TO HAVE:

	BUTTS
1	STOREROOM LOCKSET
1	CLOSER/STOP
1	CLOSER
1	STOP
2	KICK PLATES
	FLUSHBOLTS
	SILENCERS

DOOR: B114A, C144A

HW-32

EACH TO HAVE:

	CONTINUOUS HINGES
2	EXIT DEVICES (CLASSROOM)
2	CLOSERS
2	OH STOPS
1	THRESHOLD
1	REMOVABLE MULLION
	WEATHERSTRIPPING

DOOR: A131B, B113B, B113C, C121A, C131A, C131B

HW-33

EACH TO HAVE:

	BUTTS
1	PASSAGE LOCKSET
1	CLOSER
1	STOP
1	KICK PLATE
	SILENCERS

DOOR: B115B, B117A, B120A, B121B, C118A, C119A, C123A, C124A, C127A

HW-34

EACH TO HAVE:

	BUTTS
1	CLASS. SECURITY LOCKSET
1	CLOSER/STOP
1	KICK PLATE
	SILENCERS

DOOR: A100A, A114A, A115A, A116A, A117A, A121A, A122A, A123A, A124A, B130B, C117A, C120A, C122A, C125A, C126A, C129A, C130A, C132A, C133A, C134A

END OF SECTION 087100

SECTION 088000 - GLAZING

PART 1 - GENERAL

1.1 RELATED DOCUMENTS

A. Drawings and general provisions of the Contract, including General and Supplementary Conditions and Division 01 Specification Sections, apply to this Section.

1.2 SUMMARY

A. Section includes glazing for the following products and applications, including those specified in other Sections where glazing requirements are specified by reference to this Section:

1. Windows.
2. Doors.
3. Glazed curtain walls.
4. Storefront framing.
5. Glazed entrances.
6. Skylights.
7. Interior borrowed lites.

B. Related Sections:

1. Section 088300 "Mirrors."

1.3 DEFINITIONS

A. Glass Manufacturers: Firms that produce primary glass, fabricated glass, or both, as defined in referenced glazing publications.

B. Glass Thicknesses: Indicated by thickness designations in millimeters according to ASTM C 1036.

C. Interspace: Space between lites of an insulating-glass unit.

1.4 PERFORMANCE REQUIREMENTS

A. General: Installed glazing systems shall withstand normal thermal movement and wind and impact loads (where applicable) without failure, including loss or glass breakage attributable to the following: defective manufacture, fabrication, or installation; failure of sealants or gaskets to remain watertight and airtight; deterioration of glazing materials; or other defects in construction.

B. Thermal Movements: Allow for thermal movements from ambient and surface temperature changes acting on glass framing members and glazing components.

1. Temperature Change: 120 deg F (67 deg C), ambient; 180 deg F (100 deg C), material surfaces.

C. Fire rated assemblies conforming to NFPA 252 for door assemblies and NFPA 257 for window assemblies. Glazing and framing shall conform to NFPA 251 and ASTM E 119 for the required ratings.

1.5 PRECONSTRUCTION TESTING

A. Preconstruction Adhesion and Compatibility Testing: Test each glazing material type, tape sealant, gasket, glazing accessory, and glass-framing member for adhesion to and compatibility with elastomeric glazing sealants.

1. Testing will not be required if data are submitted based on previous testing of current sealant products and glazing materials matching those submitted.
2. Use ASTM C 1087 to determine whether priming and other specific joint-preparation techniques are required to obtain rapid, optimum adhesion of glazing sealants to glass, tape sealants, gaskets, and glazing channel substrates.
3. Test no fewer than eight (8) Samples of each type of material, including joint substrates, shims, sealant backings, secondary seals, and miscellaneous materials.
4. Schedule sufficient time for testing and analyzing results to prevent delaying the Work.
5. For materials failing tests, submit sealant manufacturer's written instructions for corrective measures including the use of specially formulated primers.

1.6 ACTION SUBMITTALS

A. Product Data: For each glass product and glazing material indicated.

B. HPBS Submittals:

1. Product Data for Section 16a-38k-5(d): For glazing sealants used inside the weatherproofing system, documentation including printed statement of VOC content.

C. Glass Samples: For each type of glass product other than clear monolithic vision glass; 12 inches square.

D. Glazing Accessory Samples: For gaskets and sealants, in 12-inch lengths. Install sealant Samples between two (2) strips of material representative in color of the adjoining framing system.

E. Glazing Schedule: List glass types and thicknesses for each size opening and location. Use same designations indicated on Drawings.

1.7 INFORMATIONAL SUBMITTALS

A. Qualification Data: For installers, glass testing agency and sealant testing agency.

B. Product Certificates: For glass and glazing products, from manufacturer.

C. Product Test Reports: Based on evaluation of comprehensive tests performed by a qualified testing agency, for tinted glass, coated glass, insulating glass, glazing sealants and glazing gaskets.

1. For glazing sealants, provide test reports based on testing current sealant formulations within previous thirty-six (36) month period.

D. Preconstruction adhesion and compatibility test report.

E. Warranties: Sample of special warranties.

1.8 QUALITY ASSURANCE

A. Installer Qualifications: A qualified installer who employs glass installers for this Project who are certified under the National Glass Association's Certified Glass Installer Program.

B. Glass Testing Agency Qualifications: A qualified independent testing agency accredited according to the NFRC CAP 1 Certification Agency Program.

C. Sealant Testing Agency Qualifications: An independent testing agency qualified according to ASTM C 1021 to conduct the testing indicated.

D. Source Limitations for Glass: Obtain tinted float glass, coated float glass and insulating glass from single source from single manufacturer for each glass type.

E. Source Limitations for Glazing Accessories: Obtain from single source from single manufacturer for each product and installation method.

F. Glazing Publications: Comply with published recommendations of glass product manufacturers and organizations below, unless more stringent requirements are indicated. Refer to these publications for glazing terms not otherwise defined in this Section or in referenced standards.

1. GANA Publications: GANA's "Laminated Glazing Reference Manual" and GANA's "Glazing Manual."
2. IGMA Publication for Insulating Glass: SIGMA TM-3000, "North American Glazing Guidelines for Sealed Insulating Glass Units for Commercial and Residential Use."

G. Safety Glazing Labeling: Where safety glazing labeling is indicated, permanently mark glazing with certification label of the SGCC or another certification agency acceptable to authorities having jurisdiction. Label shall indicate manufacturer's name, type of glass, thickness, and safety glazing standard with which glass complies.

H. Fire-Protection-Rated Glazing Labeling: Permanently mark fire-protection-rated glazing with certification label of a testing agency acceptable to authorities having jurisdiction. Label shall indicate manufacturer's name, test standard, whether glazing is for use in fire doors or other openings, whether or not glazing passes hose-stream test, whether or not glazing has a temperature rise rating of 450 deg F (250 deg C), and the fire-resistance rating in minutes.

I. Insulating-Glass Certification Program: Permanently marked either on spacers or on at least one component lite of units with appropriate certification label of IGCC.

J. Mockups: Build mockups to verify selections made under sample submittals and to demonstrate aesthetic effects and set quality standards for materials and execution.

1. Install glazing in mockups specified in Section 084113 "Aluminum-Framed Entrances and Storefronts", Section 084413 "Glazed Aluminum Curtain Walls" and Section 086300 “Metal Framed Skylights” to match glazing systems required for Project, including glazing methods.

1.9 DELIVERY, STORAGE, AND HANDLING

A. Protect glazing materials according to manufacturer's written instructions. Prevent damage to glass and glazing materials from condensation, temperature changes, direct exposure to sun, or other causes.

B. Comply with insulating-glass manufacturer's written recommendations for venting and sealing units to avoid hermetic seal ruptures due to altitude change.

1.10 PROJECT CONDITIONS

A. Environmental Limitations: Do not proceed with glazing when ambient and substrate temperature conditions are outside limits permitted by glazing material manufacturers and when glazing channel substrates are wet from rain, frost, condensation, or other causes.

1. Do not install glazing sealants when ambient and substrate temperature conditions are outside limits permitted by sealant manufacturer or below 40 deg F (4.4 deg C).

1.11 WARRANTY

A. Manufacturer's Special Warranty for Coated-Glass Products: Manufacturer's standard form in which coated-glass manufacturer agrees to replace coated-glass units that deteriorate within specified warranty period. Deterioration of coated glass is defined as defects developed from normal use that are not attributed to glass breakage or to maintaining and cleaning coated glass contrary to manufacturer's written instructions. Defects include peeling, cracking, and other indications of deterioration in coating.

1. Warranty Period: Ten (10) years from date of Substantial Completion.

B. Manufacturer's Special Warranty on Laminated Glass: Manufacturer's standard form in which laminated-glass manufacturer agrees to replace laminated-glass units that deteriorate within specified warranty period. Deterioration of laminated glass is defined as defects developed from normal use that are not attributed to glass breakage or to maintaining and cleaning laminated glass contrary to manufacturer's written instructions. Defects include edge separation, delamination materially obstructing vision through glass, and blemishes exceeding those allowed by referenced laminated-glass standard.

1. Warranty Period: Ten (10) years from date of Substantial Completion.

C. Manufacturer's Special Warranty on Insulating Glass: Manufacturer's standard form in which insulating-glass manufacturer agrees to replace insulating-glass units that deteriorate within specified warranty period. Deterioration of insulating glass is defined as failure of hermetic seal under normal use that is not attributed to glass breakage or to maintaining and cleaning insulating glass contrary to manufacturer's written instructions. Evidence of failure is the obstruction of vision by dust, moisture, or film on interior surfaces of glass.

1. Warranty Period: Ten (10) years from date of Substantial Completion.

PART 2 - PRODUCTS

2.1 GLASS PRODUCTS, GENERAL

A. Thickness: Where glass thickness is indicated, it is a minimum. Provide glass lites in thicknesses as needed to comply with requirements indicated.

B. Strength: Where float glass is indicated, provide annealed float glass, Kind HS heat-treated float glass, or Kind FT heat-treated float glass. Where heat-strengthened glass is indicated, provide Kind HS heat-treated float glass or Kind FT heat-treated float glass. Where fully tempered glass is indicated, provide Kind FT heat-treated float glass.

C. Thermal and Optical Performance Properties: Provide glass with performance properties specified, as indicated in manufacturer's published test data, based on procedures indicated below:

1. For monolithic-glass lites, properties are based on units with lites of thickness indicated.
2. For laminated-glass lites, properties are based on products of construction indicated.
3. For insulating-glass units, properties are based on units of thickness indicated for overall unit and for each lite.
4. U-Factors: Center-of-glazing values, according to NFRC 100 and based on LBL's WINDOW 5.2 computer program, expressed as Btu/sq. ft. x h x deg F.
5. Solar Heat-Gain Coefficient and Visible Transmittance: Center-of-glazing values, according to NFRC 200 and based on LBL's WINDOW 5.2 computer program.
6. Visible Reflectance: Center-of-glazing values, according to NFRC 300.

2.2 GLASS PRODUCTS

A. Float Glass: ASTM C 1036, Type I, Quality-Q3, Class I (clear) unless otherwise indicated.

B. Heat-Treated Float Glass: ASTM C 1048; Type I; Quality-Q3; Class I (clear) unless otherwise indicated; of kind and condition indicated.

1. Fabrication Process: By horizontal (roller-hearth) process with roll-wave distortion parallel to bottom edge of glass as installed unless otherwise indicated.
2. For uncoated glass, comply with requirements for Condition A.
3. For coated vision glass, comply with requirements for Condition C (other coated glass).

C. Patterned Glass: ASTM C 1036, Type II, Class 1 (clear), Form 3; Quality-Q6, Finish F2 (patterned both sides), Pattern P1 (linear).

1. Products: Subject to compliance with requirements, provide the following:

a. Skyline Design; **Weaves + Textures, Sateen, Technique Option C**

D. Ceramic-Coated Spandrel Glass: ASTM C 1048, Condition B, Type I, Quality-Q3, and complying with other requirements specified.

1. Glass: Tinted float.

2. Tint Color: As selected by Architect and Owner from manufacturer’s full range.
3. Ceramic Coating Color: As selected by Architect from manufacturer's full range.

2.3 LAMINATED GLASS

A. Manufacturers: Subject to compliance with requirements, available manufacturers offering products that may be incorporated into the Work include, but are not limited to, the following:

1. Cardinal Glass Industries
2. DuPont™ Building Innovations
3. Substitutions: Under provisions of Section 012500 “Substitution Procedures”.

B. Laminated Glass: ASTM C 1172, and complying with testing requirements in 16 CFR 1201 for Category II materials, and with other requirements specified. Use materials that have a proven record of no tendency to bubble, discolor, or lose physical and mechanical properties after fabrication and installation.

1. Construction: Laminate glass with polyvinyl butyral interlayer to comply with interlayer manufacturer's written recommendations.
2. Interlayer Thickness: Provide thickness not less than that indicated and as needed to comply with requirements.
3. Interlayer Color: Clear unless otherwise indicated.

C. Glass: Comply with applicable requirements in "Glass Products" Article as indicated by designations in "Laminated-Glass Types" Article.

2.4 INSULATING GLASS

A. Insulating-Glass Units: Factory-assembled units consisting of sealed lites of glass separated by a dehydrated interspace, qualified according to ASTM E 2190, and complying with other requirements specified.

1. Sealing System: Dual seal, with polyisobutylene and silicone primary and secondary.
2. Spacer: Manufacturer's standard spacer material and construction.

B. Glass: Comply with applicable requirements in "Glass Products" Article as indicated by designations in "Insulating-Glass Types" Article.

2.5 FIRE-PROTECTION-RATED GLAZING

A. Fire-Protection-Rated Glazing, General: Listed and labeled by a testing agency acceptable to authorities having jurisdiction, for fire-protection ratings indicated, based on testing according to NFPA 252 for door assemblies and NFPA 257 for window assemblies. The glazing and framing shall be tested as a wall assembly in accordance with the NFPA 251 and ASTM E 119 sections for the required ratings.

B. Laminated Glass with Intumescent Interlayers: Laminated glass made from multiple plies of uncoated, clear float glass; with intumescent interlayers; complying with testing requirements in 16 CFR 1201 for Category II materials.

1. Products: Subject to compliance with requirements, available products that may be incorporated into the Work include, but are not limited to, the following:

    a. InterEdge, Inc., a subsidiary of AFG Industries, Inc.; **Pyrobel**
    b. Pilkington Group Limited (distributed by Technical Glass Products); **PyroStop**
    c. Vetrotech Saint-Gobain; **SGG Swissflam N2**
    d. Substitutions: Under provisions of Section 012500 “Substitution Procedures”.

2.6 GLAZING GASKETS

A. Dense Compression Gaskets: Molded or extruded gaskets of profile and hardness required to maintain watertight seal, made from one (1) of the following:

1. EPDM complying with ASTM C 864.
2. Silicone complying with ASTM C 1115.
3. Thermoplastic polyolefin rubber complying with ASTM C 1115.

B. Soft Compression Gaskets: Extruded or molded, closed-cell, integral-skinned EPDM, silicone or thermoplastic polyolefin rubber gaskets complying with ASTM C 509, Type II, black; of profile and hardness required to maintain watertight seal.

1. Application: Use where soft compression gaskets will be compressed by inserting dense compression gaskets on opposite side of glazing or pressure applied by means of pressure-glazing stops on opposite side of glazing.

C. Lock-Strip Gaskets: Neoprene extrusions in size and shape indicated, fabricated into frames with molded corner units and zipper lock-strips, complying with ASTM C 542, black.

2.7 GLAZING SEALANTS

A. General:

1. Compatibility: Provide glazing sealants that are compatible with one another and with other materials they will contact, including glass products, seals of insulating-glass units, and glazing channel substrates, under conditions of service and application, as demonstrated by sealant manufacturer based on testing and field experience.
2. Suitability: Comply with sealant and glass manufacturers' written instructions for selecting glazing sealants suitable for applications indicated and for conditions existing at time of installation.
3. Sealants used inside the weatherproofing system, shall have a VOC content of not more than 250 g/L when calculated according to 40 CFR 59, Subpart D (EPA Method 24).
4. Sealants used inside the weatherproofing system shall comply with the testing and product requirements of the California Department of Health Services' "Standard Practice for the Testing of Volatile Organic Emissions from Various Sources Using Small-Scale Environmental Chambers."
5. Colors of Exposed Glazing Sealants: As selected by Architect from manufacturer's full range.

B. Glazing Sealant: Neutral-curing silicone glazing sealant complying with ASTM C 920, Type S, Grade NS, Class 100/50, Use NT.

1. Products: Subject to compliance with requirements, available products that may be incorporated into the Work include, but are not limited to, the following:

    a. Dow Corning Corporation; **790**
    b. Pecora Corporation; **890**
    c. Tremco Incorporated; **Spectrem 1**
    d. Substitutions: Under provisions of Section 012500 “Substitution Procedures”.

C. Glazing Sealants for Fire-Rated Glazing Products: Products that are approved by testing agencies that listed and labeled fire-resistant glazing products with which they are used for applications and fire-protection ratings indicated.

2.8 GLAZING TAPES

A. Back-Bedding Mastic Glazing Tapes: Preformed, butyl-based, one hundred percent (100%) solids elastomeric tape; nonstaining and nonmigrating in contact with nonporous surfaces; with or without spacer rod as recommended in writing by tape and glass manufacturers for application indicated; and complying with ASTM C 1281 and AAMA 800 for products indicated below:

1. AAMA 806.3 tape, for glazing applications in which tape is subject to continuous pressure.

2.9 MISCELLANEOUS GLAZING MATERIALS

A. General: Provide products of material, size, and shape complying with referenced glazing standard, requirements of manufacturers of glass and other glazing materials for application indicated, and with a proven record of compatibility with surfaces contacted in installation.

B. Cleaners, Primers, and Sealers: Types recommended by sealant or gasket manufacturer.

C. Setting Blocks: Elastomeric material with a Shore, Type A durometer hardness of 85, plus or minus 5.

D. Spacers: Elastomeric blocks or continuous extrusions of hardness required by glass manufacturer to maintain glass lites in place for installation indicated.

E. Edge Blocks: Elastomeric material of hardness needed to limit glass lateral movement (side walking).

F. Cylindrical Glazing Sealant Backing: ASTM C 1330, Type O (open-cell material), of size and density to control glazing sealant depth and otherwise produce optimum glazing sealant performance.

G. Perimeter Insulation for Fire-Resistive Glazing: Product that is approved by testing agency that listed and labeled fire-resistant glazing product with which it is used for application and fire-protection rating indicated.

2.10 FABRICATION OF GLAZING UNITS

A. Fabricate glazing units in sizes required to fit openings indicated for Project, with edge and face clearances, edge and surface conditions, and bite complying with written instructions of product manufacturer and referenced glazing publications, to comply with system performance requirements.

B. Clean-cut or flat-grind vertical edges of butt-glazed monolithic lites to produce square edges with slight chamfers at junctions of edges and faces.

C. Grind smooth and polish exposed glass edges and corners.

2.11 MONOLITHIC-GLASS TYPES

A. Glass Type **GL-1**: Clear float glass.

1. Thickness: ¼ inch.

B. Glass Type **GL-2**: Clear fully tempered float glass.

1. Thickness: ¼ inch.
2. Provide safety glazing labeling.

C. Glass Type **GL-3**: Frosted, fully tempered float glass.

1. Thickness: ¼ inch.
2. Provide safety glazing labeling.

D. Glass Type **GL-4**: Patterned, fully tempered float glass.

1. Thickness: ¼ inch.
2. Provide safety glazing labeling.

2.12 INSULATING-GLASS TYPES

A. Glass Type **GL-5**: Clear insulating glass.

1. Overall Unit Thickness: 1 inch.
2. Thickness of Each Glass Lite: ¼ inch.
3. Outdoor Lite: Float glass.
4. Interspace Content: Air.
5. Indoor Lite: Float glass.

B. Glass Type **GL-6**: Clear, tempered insulating glass.

1. Overall Unit Thickness: 1 inch.
2. Thickness of Each Glass Lite: ¼ inch.
3. Outdoor Lite: Fully tempered float glass.
4. Interspace Content: Air.
5. Indoor Lite: Fully tempered float glass.
6. Provide safety glazing labeling.

C. Glass Type **GL-7**: Low-e-coated, tempered, frosted insulating glass.

1. Overall Unit Thickness: 1 inch.
2. Thickness of Each Glass Lite: ¼ inch.
3. Outdoor Lite: Fully tempered float glass.
4. Interspace Content: Argon.
5. Indoor Lite: Frosted heat-strengthened float glass, third surface.
6. Low-E Coating: Pyrolytic on second surface.
7. Provide safety glazing labeling.

D. Glass Type **GL-8**: Low-e-coated, tinted insulating glass.

1. Overall Unit Thickness: 1 inch.
2. Thickness of Each Glass Lite: ¼ inch.
3. Outdoor Lite: Tinted heat-strengthened float glass, color as selected by Architect and Owner from manufacturer's full range.
4. Interspace Content: Argon.
5. Indoor Lite: Clear heat-strengthened float glass.
6. Low-E Coating: Pyrolytic on second surface.

E. Glass Type **GL-9**: Low-e-coated, tempered, tinted insulating glass.

1. Overall Unit Thickness: 1 inch.
2. Thickness of Each Glass Lite: ¼ inch.
3. Outdoor Lite: Tinted fully tempered float glass, color as selected by Architect and Owner from manufacturer's full range.
4. Interspace Content: Argon.
5. Indoor Lite: Clear fully tempered float glass.
6. Low-E Coating: Pyrolytic on second surface.
7. Provide safety glazing labeling.

F. Glass Type **GL-10**: Ceramic-coated, tinted, tempered, insulating spandrel glass.

1. Overall Unit Thickness: 1 inch.
2. Thickness of Each Glass Lite: ¼ inch.
3. Outdoor Lite: Tinted fully tempered float glass, color as selected by Architect and Owner from manufacturer's full range.
4. Interspace Content: Air.
5. Indoor Lite: Clear fully tempered float glass.
6. Coating Location: Fourth surface.
7. Provide safety glazing labeling.

G. Glass Type **GL-11**: Low-e-coated, tinted, tempered, frosted insulating glass.

1. Overall Unit Thickness: 1 inch.
2. Thickness of Each Glass Lite: ¼ inch.
3. Outdoor Lite: Tinted fully tempered float glass, color as selected by Architect and Owner from manufacturer's full range.
4. Interspace Content: Argon.
5. Indoor Lite: Frosted fully tempered float glass, third surface.
6. Low-E Coating: Pyrolytic on second surface.

7. Provide safety glazing labeling.

H. Glass Type **GL-14**: Clear, tempered, acoustical insulating glass.

1. Overall Unit Thickness: 1-1/8 inch.
2. Thickness of Each Glass Lite: ¼ inch.
3. Outdoor Lite: Fully tempered float glass.
4. Interspace Content: Air.
5. Indoor Lite: Fully tempered float glass.
6. Provide safety glazing labeling.

2.13 INSULATING-LAMINATED-GLASS TYPES

A. Glass Type **GL-12**: Low-e-coated, tinted, insulating laminated glass.

1. Overall Unit Thickness: Minimum 1 inch.
2. Thickness of Outdoor Lite: ¼ inch.
3. Outdoor Lite: Tinted fully tempered float glass.
4. Interspace Content: Argon.
5. Indoor Lite: Clear laminated glass with two (2) plies of heat-strengthened float glass.

   a. Thickness of Each Glass Ply: Minimum 1/8 inch.
   b. Interlayer Thickness: 0.030 inch.

6. Low-E Coating: Pyrolytic on second surface.
7. Provide safety glazing labeling.

2.14 FIRE-PROTECTION-RATED GLAZING TYPES

A. Glass Type **GL-13**: 60-minute fire-rated glazing with 450 deg F (250 deg C) temperature rise limitation; laminated glass with intumescent interlayers.

1. Provide safety glazing labeling.

PART 3 - EXECUTION

3.1 EXAMINATION

A. Examine framing, glazing channels, and stops, with Installer present, for compliance with the following:

1. Manufacturing and installation tolerances, including those for size, squareness, and offsets at corners.
2. Presence and functioning of weep systems.
3. Minimum required face and edge clearances.
4. Effective sealing between joints of glass-framing members.

B. Proceed with installation only after unsatisfactory conditions have been corrected.

3.2 PREPARATION

A. Clean glazing channels and other framing members receiving glass immediately before glazing. Remove coatings not firmly bonded to substrates.

B. Examine glazing units to locate exterior and interior surfaces. Label or mark units as needed so that exterior and interior surfaces are readily identifiable. Do not use materials that will leave visible marks in the completed work.

3.3 GLAZING, GENERAL

A. Comply with combined written instructions of manufacturers of glass, sealants, gaskets, and other glazing materials, unless more stringent requirements are indicated, including those in referenced glazing publications.

B. Adjust glazing channel dimensions as required by Project conditions during installation to provide necessary bite on glass, minimum edge and face clearances, and adequate sealant thicknesses, with reasonable tolerances.

C. Protect glass edges from damage during handling and installation. Remove damaged glass from Project site and legally dispose of off Project site. Damaged glass is glass with edge damage or other imperfections that, when installed, could weaken glass and impair performance and appearance.

D. Apply primers to joint surfaces where required for adhesion of sealants, as determined by preconstruction testing.

E. Install setting blocks in sill rabbets, sized and located to comply with referenced glazing publications, unless otherwise required by glass manufacturer. Set blocks in thin course of compatible sealant suitable for heel bead.

F. Do not exceed edge pressures stipulated by glass manufacturers for installing glass lites.

G. Provide spacers for glass lites where length plus width is larger than 50 inches.

1. Locate spacers directly opposite each other on both inside and outside faces of glass. Install correct size and spacing to preserve required face clearances, unless gaskets and glazing tapes are used that have demonstrated ability to maintain required face clearances and to comply with system performance requirements.
2. Provide 1/8-inch minimum bite of spacers on glass and use thickness equal to sealant width. With glazing tape, use thickness slightly less than final compressed thickness of tape.

H. Provide edge blocking where indicated or needed to prevent glass lites from moving sideways in glazing channel, as recommended in writing by glass manufacturer and according to requirements in referenced glazing publications.

I. Set glass lites in each series with uniform pattern, draw, bow, and similar characteristics.

J. Set glass lites with proper orientation so that coatings face exterior or interior as specified.

K. Where wedge-shaped gaskets are driven into one side of channel to pressurize sealant or gasket on opposite side, provide adequate anchorage so gasket cannot walk out when installation is subjected to movement.

L. Square cut wedge-shaped gaskets at corners and install gaskets in a manner recommended by gasket manufacturer to prevent corners from pulling away; seal corner joints and butt joints with sealant recommended by gasket manufacturer.

3.4 TAPE GLAZING

A. Position tapes on fixed stops so that, when compressed by glass, their exposed edges are flush with or protrude slightly above sightline of stops.

B. Install tapes continuously, but not necessarily in one continuous length. Do not stretch tapes to make them fit opening.

C. Cover vertical framing joints by applying tapes to heads and sills first and then to jambs. Cover horizontal framing joints by applying tapes to jambs and then to heads and sills.

D. Place joints in tapes at corners of opening with adjoining lengths butted together, not lapped. Seal joints in tapes with compatible sealant approved by tape manufacturer.

E. Do not remove release paper from tape until right before each glazing unit is installed.

F. Apply heel bead of elastomeric sealant.

G. Center glass lites in openings on setting blocks and press firmly against tape by inserting dense compression gaskets formed and installed to lock in place against faces of removable stops. Start gasket applications at corners and work toward centers of openings.

H. Apply cap bead of elastomeric sealant over exposed edge of tape.

3.5 GASKET GLAZING (DRY)

A. Cut compression gaskets to lengths recommended by gasket manufacturer to fit openings exactly, with allowance for stretch during installation.

B. Insert soft compression gasket between glass and frame or fixed stop so it is securely in place with joints miter cut and bonded together at corners.

C. Installation with Drive-in Wedge Gaskets: Center glass lites in openings on setting blocks and press firmly against soft compression gasket by inserting dense compression gaskets formed and installed to lock in place against faces of removable stops. Start gasket applications at corners and work toward centers of openings. Compress gaskets to produce a weathertight seal without developing bending stresses in glass. Seal gasket joints with sealant recommended by gasket manufacturer.

D. Installation with Pressure-Glazing Stops: Center glass lites in openings on setting blocks and press firmly against soft compression gasket. Install dense compression gaskets and pressure-glazing stops, applying pressure uniformly to compression gaskets. Compress gaskets to

produce a weathertight seal without developing bending stresses in glass. Seal gasket joints with sealant recommended by gasket manufacturer.

E. Install gaskets so they protrude past face of glazing stops.

3.6 SEALANT GLAZING (WET)

A. Install continuous spacers, or spacers combined with cylindrical sealant backing, between glass lites and glazing stops to maintain glass face clearances and to prevent sealant from extruding into glass channel and blocking weep systems until sealants cure. Secure spacers or spacers and backings in place and in position to control depth of installed sealant relative to edge clearance for optimum sealant performance.

B. Force sealants into glazing channels to eliminate voids and to ensure complete wetting or bond of sealant to glass and channel surfaces.

C. Tool exposed surfaces of sealants to provide a substantial wash away from glass.

3.7 LOCK-STRIP GASKET GLAZING

A. Comply with ASTM C 716 and gasket manufacturer's written instructions. Provide supplementary wet seal and weep system unless otherwise indicated.

3.8 CLEANING AND PROTECTION

A. Protect exterior glass from damage immediately after installation by attaching crossed streamers to framing held away from glass. Do not apply markers to glass surface. Remove nonpermanent labels and clean surfaces.

B. Protect glass from contact with contaminating substances resulting from construction operations. If, despite such protection, contaminating substances do come into contact with glass, remove substances immediately as recommended in writing by glass manufacturer.

C. Examine glass surfaces adjacent to or below exterior concrete and other masonry surfaces at frequent intervals during construction, but not less than once a month, for buildup of dirt, scum, alkaline deposits, or stains; remove as recommended in writing by glass manufacturer.

D. Remove and replace glass that is broken, chipped, cracked, or abraded or that is damaged from natural causes, accidents, and vandalism, during construction period.

E. Wash glass on both exposed surfaces in each area of Project not more than four (4) days before date scheduled for inspections that establish date of Substantial Completion. Wash glass as recommended in writing by glass manufacturer.

END OF SECTION 088000

SECTION 089000 - LOUVERS AND VENTS

PART 1 - GENERAL

1.1 RELATED DOCUMENTS

A. Drawings and general provisions of the Contract, including General and Supplementary Conditions and Division 01 Specification Sections, apply to this Section.

B. Section 019113 “General Commissioning Requirements” for commissioning and testing requirements related to this Section.

1.2 SUMMARY

A. Section Includes:

1. Fixed, extruded-aluminum louvers.

1.3 DEFINITIONS

A. Louver Terminology: Definitions of terms for metal louvers contained in AMCA 501 apply to this Section unless otherwise defined in this Section or in referenced standards.

B. Horizontal Louver: Louver with horizontal blades; i.e., the axes of the blades are horizontal.

C. Drainable-Blade Louver: Louver with blades having gutters that collect water and drain it to channels in jambs and mullions, which carry it to bottom of unit and away from opening.

1.4 ACTION SUBMITTALS

A. Product Data: For each type of product indicated.

1. For louvers specified to bear AMCA seal, include printed catalog pages showing specified models with appropriate AMCA Certified Ratings Seals.

B. Shop Drawings: For louvers and accessories. Include plans, elevations, sections, details, and attachments to other work. Show frame profiles and blade profiles, angles, and spacing.

1. Show weep paths, gaskets, flashing, sealant, and other means of preventing water intrusion.
2. Show mullion profiles and locations.

C. Samples for Initial Selection: For units with factory-applied color finishes.

1.5 QUALITY ASSURANCE

A. Source Limitations: Obtain louvers and vents from single source from a single manufacturer where indicated to be of same type, design, or factory-applied color finish.

B. Welding: Qualify procedures and personnel according to the following:

1. AWS D1.2, "Structural Welding Code - Aluminum."

C. SMACNA Standard: Comply with recommendations in SMACNA's "Architectural Sheet Metal Manual" for fabrication, construction details, and installation procedures.

1.6 PROJECT CONDITIONS

A. Field Measurements: Verify actual dimensions of openings by field measurements before fabrication.

PART 2 - PRODUCTS

2.1 MATERIALS

A. Aluminum Extrusions: ASTM B 221, Alloy 6063-T5, T-52, or T6.

B. Aluminum Sheet: ASTM B 209, Alloy 3003 or 5005 with temper as required for forming, or as otherwise recommended by metal producer for required finish.

C. Aluminum Castings: ASTM B 26, Alloy 319.

D. Fasteners: Use types and sizes to suit unit installation conditions.

1. Use Phillips flat-head tamper-resistant screws for exposed fasteners unless otherwise indicated.
2. For fastening aluminum, use aluminum or 300 series stainless-steel fasteners.
3. For color-finished louvers, use fasteners with heads that match color of louvers.

E. Bituminous Paint: Cold-applied asphalt emulsion complying with ASTM D 1187.

2.2 FABRICATION, GENERAL

A. Assemble louvers in factory to minimize field splicing and assembly. Disassemble units as necessary for shipping and handling limitations. Clearly mark units for reassembly and coordinated installation.

B. Vertical Assemblies: Where height of louver units exceeds fabrication and handling limitations, fabricate units to permit field-bolted assembly with close-fitting joints in jambs and mullions, reinforced with splice plates.

1. Continuous Vertical Assemblies: Fabricate units without interrupting blade-spacing pattern unless horizontal mullions are indicated.

C. Maintain equal louver blade spacing to produce uniform appearance.

D. Fabricate frames, including integral sills, to fit in openings of sizes indicated, with allowances made for fabrication and installation tolerances, adjoining material tolerances, and perimeter sealant joints.

1. Frame Type: Channel or flange unless otherwise indicated.

E. Include supports, anchorages, and accessories required for complete assembly.

F. Provide vertical mullions of type and at spacings indicated, but not more than recommended by manufacturer, or 72 inches o.c., whichever is less.

1. Exposed Mullions: Where indicated, provide units with exposed mullions of same width and depth as louver frame. Where length of louver exceeds fabrication and handling limitations, provide interlocking split mullions designed to permit expansion and contraction.
2. Exterior Corners: Prefabricated corner units with mitered and welded blades and with semirecessed mullions at corners.

G. Provide subsills made of same material as louvers for recessed louvers.

H. Join frame members to each other and to fixed louver blades with fillet welds, threaded fasteners, or both, as standard with louver manufacturer unless otherwise indicated or size of louver assembly makes bolted connections between frame members necessary.

2.3 FIXED, EXTRUDED-ALUMINUM LOUVERS

A. Horizontal, Sightproof, Drainable-Blade Louver:

1. Basis-of-Design Product:

a. Greenheck Fan Corporation

2. Manufacturers: Subject to compliance with requirements, available manufacturers offering products that may be incorporated into the Work include, but are not limited to, the following:

a. Airolite Company, LLC (The)
b. Arrow United Industries; a division of Mestek, Inc.
c. Industrial Louvers, Inc.
d. Substitutions: Under provisions of Section 012500 “Substitution Procedures”.

3. Louver Depth: 4 inches.
4. Frame and Blade Nominal Thickness: Not less than 0.080 inch for blades and for frames.
5. Mullion Type: Exposed.
6. Louver Performance Ratings: Refer to Mechanical Drawings.

2.4 LOUVER SCREENS

A. General: Provide screen at each exterior louver.

1. Screen Location for Fixed Louvers: Interior face.
2. Screening Type: Bird screening.

B. Secure screen frames to louver frames with stainless-steel machine screws, spaced a maximum of 6 inches from each corner and at 12 inches o.c.

C. Louver Screen Frames: Fabricate with mitered corners to louver sizes indicated.

1. Metal: Same kind and form of metal as indicated for louver to which screens are attached. Reinforce extruded-aluminum screen frames at corners with clips.
2. Finish: Same finish as louver frames to which louver screens are attached.
3. Type: Non-rewirable, U-shaped frames.

D. Louver Screening for Aluminum Louvers:

1. Bird Screening: Aluminum, ½-inch- square mesh, 0.063-inch wire.

2.5 FINISHES, GENERAL

A. Comply with NAAMM's "Metal Finishes Manual for Architectural and Metal Products" for recommendations for applying and designating finishes.

2.6 ALUMINUM FINISHES

A. High-Performance Organic Finish: 2-coat fluoropolymer finish complying with AAMA 2605 and containing not less than seventy percent (70%) PVDF resin by weight in color coat. Prepare, pretreat, and apply coating to exposed metal surfaces to comply with coating and resin manufacturers' written instructions.

1. Color and Gloss: As selected by Architect and Owner from manufacturer's full range.

PART 3 - EXECUTION

3.1 COMISSIONING OF COMPONENTS AND SYSTEMS

A. Engage a manufacturer authorized representative who is familiar with this project to participate and assist, if necessary, in the functional performance testing of the components and systems included in this Division with the Commissioning Agent.

3.2 EXAMINATION

A. Examine substrates and openings, with Installer present, for compliance with requirements for installation tolerances and other conditions affecting performance.

B. Proceed with installation only after unsatisfactory conditions have been corrected.

3.3 PREPARATION

A. Coordinate setting drawings, diagrams, templates, instructions, and directions for installation of anchorages that are to be embedded in concrete or masonry construction. Coordinate delivery of such items to Project site.

3.4 INSTALLATION

A. Locate and place louvers and vents level, plumb, and at indicated alignment with adjacent work.

B. Use concealed anchorages where possible. Provide brass or lead washers fitted to screws where required to protect metal surfaces and to make a weathertight connection.

C. Form closely fitted joints with exposed connections accurately located and secured.

D. Provide perimeter reveals and openings of uniform width for sealants and joint fillers, as indicated.

E. Repair finishes damaged by cutting, welding, soldering, and grinding. Restore finishes so no evidence remains of corrective work. Return items that cannot be refinished in the field to the factory, make required alterations, and refinish entire unit or provide new units.

F. Protect unpainted galvanized and nonferrous-metal surfaces that will be in contact with concrete, masonry, or dissimilar metals from corrosion and galvanic action by applying a heavy coating of bituminous paint or by separating surfaces with waterproof gaskets or nonmetallic flashing.

G. Install concealed gaskets, flashings, joint fillers, and insulation as louver installation progresses, where weathertight louver joints are required. Comply with Section 079200 "Joint Sealants" for sealants applied during louver installation.

3.5 ADJUSTING AND CLEANING

A. Test operation of adjustable louvers and adjust as needed to produce fully functioning units that comply with requirements.

B. Clean exposed surfaces of louvers and vents that are not protected by temporary covering, to remove fingerprints and soil during construction period. Do not let soil accumulate during construction period.

C. Before final inspection, clean exposed surfaces with water and a mild soap or detergent not harmful to finishes. Thoroughly rinse surfaces and dry.

D. Restore louvers and vents damaged during installation and construction so no evidence remains of corrective work. If results of restoration are unsuccessful, as determined by Architect, remove damaged units and replace with new units.

1. Touch up minor abrasions in finishes with air-dried coating that matches color and gloss of, and is compatible with, factory-applied finish coating.

END OF SECTION 089000

FLOORS:

LSF-1:

Item	Marmoleum
Size:	32.00 m x 200.00 cm
Thickness:	2.00 / 2.25 mm
Manf.	Forbo Flooring Systems
Style:	Marmoleum Real
Color:	3257 Edelweiss
Location:	See floor pattern plans / finish schedule
Local Rep:	Rob Fortier 860.304.6197

LSF-2:

Item	Marmoleum
Size:	32.00 m x 200.00 cm
Thickness:	2.00 / 2.25 mm
Manf.	Forbo Flooring Systems
Style:	Marmoleum Real
Color:	3030 Blue
Location:	See floor pattern plans / finish schedule
Local Rep:	Rob Fortier 860.304.6197

LSF-3:

Item	Marmoleum
Size:	32.00 m x 200.00 cm
Thickness:	2.00 / 2.25 mm
Manf.	Forbo Flooring Systems
Style:	Marmoleum Real
Color:	3238 Laguna
Location:	See floor pattern plans / finish schedule
Local Rep:	Rob Fortier 860.304.6197

LSF-4:

Item	Marmoleum
Size:	32.00 m x 200.00 cm
Thickness:	2.00 / 2.25 mm
Manf.	Forbo Flooring Systems
Style:	Marmoleum Real
Color:	3243 Stucco Rosso
Location:	See floor pattern plans / finish schedule
Local Rep:	Rob Fortier 860.304.6197

CPT-1

Item:	Carpet Tile
Size:	1m x 1m
Thickness:	.11 inches
Manf:	Milliken Floor Coverings
Style:	Theory 2.0/Eureka 2.0
Backing:	Comfort Plus ES Tile backing
Color:	EURO3-118-97-126 Grey Matter with French Blue
Installation:	Monolithic
Location:	Media Center (B129)

Local Rep: Peter Woo 914.557.2640

CPT-2

Item: Carpet Tile
Size: 1m x 1m
Thickness: .11 inches
Manf: Milliken Floor Coverings
Style: Theory 2.0/Blip 2.0
Backing: Comfort Plus ES Tile backing
Color: BLP126-118-97-48 Grey Matter with French Blue
Installation: Monolithic
Location: Media Center (B129), Media Workroom (B129A), Computer Room (B130), See floor pattern plans
Local Rep: Peter Woo 914.557.2640

CPT-3

Item: Carpet Tile
Size: 1m x 1m
Thickness: .11 inches
Manf: Milliken Floor Coverings
Style: Theory 2.0/Blip 2.0
Backing: Comfort Plus ES Tile backing
Color: BLP48-52-108-119 Indie
Installation: Monolithic
Location: Media Center (C141), see floor pattern plans
Local Rep: Peter Woo 914.557.2640

CPT-4

Item: Carpet Tile
Size: 1m x 1m
Thickness: 5/16”
Manf: Milliken Floor Coverings
Style: In Color
Backing: Comfort Plus ES Tile backing
Color: 134 Prussian Blue
Installation: Monolithic
Location: Media Center (B129, C141), see floor pattern plans
Local Rep: Peter Woo 914.557.2640

CPT-5

Item: Carpet Tile
Size: 1m x 1m
Thickness: 5/16”
Manf: Milliken Floor Coverings
Style: Theory 2.0/Stacks 2.0
Backing: Comfort Plus ES Tile backing
Color: STK126-79-44-108 Nirvana French Blue
Installation: Monolithic
Location: Media Workroom (B129A), Main Office (C103), Principals Office (C105), Conference Room (C143), Social Worker (C140),

	Speech (C139), Pych. Office (C137)
Local Rep:	Peter Woo 914.557.2640

VCTT-1

Item:	Carpet Tile
Size:	6’ roll
Manf:	Tandus Flooring
Style:	All Star
Color:	Lapis 17308
Composition:	Dynex Nylon, 50% Solution Dyed, 50% Yarn Dyed
Backing:	Powerboll
Location:	Kindergarten + First Grade Classrooms; see floor pattern plans
Local Rep:	Fran Burrage 413.478.0357

CFT-1:

Item:	Ceramic Floor Tile
Size:	2 x 2
Thickness:	3/16”
Manf.	Daltile
Style:	Keystones
Color:	D037 Pepper White
Grout:	Latacrete 78 Sterling White
Location:	All Toilet Rooms; see drawing 2/A230
Local Rep:	Lucia Franco 203.671.0930

CFT-2:

Item:	Ceramic Floor Tile
Size:	2 x 2
Thickness:	3/16”
Manf.	Daltile
Style:	Keystones
Color:	D209 Navy Speckle
Grout:	Latacrete 78 Sterling White
Location:	All Toilet Rooms; see drawing 2/A230
Local Rep:	Lucia Franco 203.671.0930

CFT-3:

Item:	Ceramic Floor Tile
Size:	2 x 2
Thickness:	3/16”
Manf.	Daltile
Style:	Keystones
Color:	D152 Mint Ice
Grout:	Latacrete 78 Sterling White
Location:	All Toilet Rooms; see drawing 2/A230
Local Rep:	Lucia Franco 203.671.0930

QT1

Item:	Quarry Tile
Size:	6’ x 6”
Thickness:	½”

Manf:	Daltile
Style:	Quarry Textures
Color:	Red Blaze 0Q40
Grout:	Latacrete 46 Quarry Red
Recycled Content:	26.4% pre-consumer
Location:	Kitchen (B106), Office (B107), Storage (B108)
Notes:	Made in USA; green squared certification
Local Rep:	Lucia Franco 203.671.0930

WOM-1

Item:	Foot Grille
Thickness:	¾" – 2" with frame
Manf:	Mats Inc
Style:	Great Grid
Type:	Grate & Grill 6063-T52 Recess in slab
Color:	Charcoal
Installation:	Mounting Recessed
Location:	Vestibule C100; Vestibule B100
Note:	Coordinate insert with aluminum frame with Structural and Entrance Mat; 46% pre-consumer recycled content
Local Rep:	Erica Morgan 781.573.0205

WOM-2

Item:	Walk of Mat
Size:	20" x 20"
Manf:	Mats Inc
Style:	Enterprise Tile
Color:	Anthracite
Backing:	Bitumen
Material:	100% Polypropylene
Recycled Content:	15% pre-consume; 15% post consumer
Location:	Lobby (C101), Corridor (B101)
Local Rep:	Erica Morgan 781.573.0205

WOM-3

Item:	Roll-up Walk off Mat
Manf:	Mats Inc
Style:	Aqua Block
Color:	Charcoal
Size:	See floor pattern plans
Weight:	36 oz/sq yd
Backing:	Nitrile Gripper
Material:	100% solution dyed UV stabilized polypropylene fibers
Installation:	Loose Lay
Location:	Vestibule (C131), Vestibule (C121), Art Classroom (A129), Vestibule (B111)
Local Rep:	Erika Morgan 781.573.0205

SF-1

Item:	Gym Flooring
Manf:	Signature Sports Flooring

Style:	Signaflor
Color:	Pebble Gray 7032
Location:	Gymnasium (B113)
Notes:	Provide gym striping; see floor pattern plan
Local Rep:	Ed Rankel 215.872.0380

BASE:

RB-1

Item:	Rubber Base
Size:	6”
Thickness:	1/8”
Manf:	Johnsonite
Color:	71 Storm Cloud
Note:	Typical U.O.N.
Local Rep:	Carrie Bartucca 860.305.2599

RB-2

Item:	Rubber Base
Size:	6”
Thickness:	1/8”
Manf:	Johnsonite
Color:	292 Evening Shower
Location:	Media (B129), Media Reading (C141), Computer (B130)
Local Rep:	Carrie Bartucca 860.305.2599

RB-3

Item:	Rubber Base
Size:	4”
Thickness:	1/8”
Manf:	Johnsonite
Color:	71 Storm Cloud
Location:	Located at casework toe kicks throughout space
Note:	At Casework Toe Kick
Local Rep:	Carrie Bartucca 860.305.2599

RB-4

Item:	Gymnasium Rubber Base
Size:	3”x4”
Manf:	Action Floor System
Color:	Black
Local Rep:	David L. Fields 843.761.7665

GB-1

Item:	Glazed Block Base
Color:	T.B.D.

QTB-1

Item:	Quarry Tile Base
Manf:	Daltile
Color:	0Q40 red blaze

Size:	5” x 6” cove
Style:	Q3565
Location:	
Notes:	provide inside/outside corners as needed
Local Rep:	Lucia Franco 203.671.0930

WALLS:

P-1

Item:	Paint
Manf:	Sherwin Williams
Color:	SW6169 Sedate Gray
Finish:	Eggshell
Location:	General Wall Color U.O.N.
Local Rep:	Dan Armstrong 860.922.3333

P-2

Item:	Paint
Manf:	Sherwin Williams
Color:	SW6229 Tempe Star
Finish:	Eggshell
Location:	Accent Paint @ Media Center (C141, B129), Computer room (B130); computer table wall (see elevation 11/A724)
Local Rep:	Dan Armstrong 860.922.3333

P-3

Item:	Paint
Manf:	Sherwin Williams
Color:	SW6340 Baked Clay
Finish:	Eggshell
Location:	Accent Paint @ corridors, media center, gymnasium; see interior elevations
Local Rep:	Dan Armstrong 860.922.3333

P-4

Item:	Paint
Manf:	Sherwin Williams
Color:	SW 7004 Snowbound
Finish:	Eggshell
Location:	All Toilet Room + painted gyp. Board soffits + C195
Local Rep:	Dan Armstrong 860.922.3333

P-5

Item:	Paint
Manf:	Sherwin Williams
Color:	SW6515 Leisure Blue
Finish:	Eggshell
Location:	Accent wall at classrooms teaching wall only, Nurse Suite, cafeteria + corridors. See finish plans + elevations.
Local Rep:	Dan Armstrong 860.922.3333

P-6

Item:	Paint
Manf:	Sherwin Williams
Color:	SW7640 Fawn Brindle
Finish:	Eggshell
Location:	Accent paint in Art Classroom (A129) at teaching wall (see finish plan)
Local Rep:	Dan Armstrong 860.922.3333

P-7

Item:	Paint
Manf:	Sherwin Williams
Color:	SW6220 Interesting Aqua
Finish:	Eggshell
Location:	Accent paint in Main Office (C103) + principal's office C105; see finish plan; accent paint @ computer wall (see elevation 11/A724)
Local Rep:	Dan Armstrong 860.922.3333

P-8

Item:	Paint
Manf:	Sherwin Williams
Color:	SW6206 Oyster Bay
Finish:	Eggshell
Location:	Accent paint in Science Classrooms at teaching wall (see finish plan)
Local Rep:	Dan Armstrong 860.922.3333

P-9

Item:	Paint
Manf:	Sherwin Williams
Color:	SW7075 Web Gray
Finish:	Eggshell
Location:	Accent paint in Gymnasium (B113) at spiral supply duct work
Local Rep:	Dan Armstrong 860.922.3333

P-10

Item:	Paint
Manf:	Sherwin Williams
Color:	SW7075 Web Gray
Finish:	Semi-gloss
Location:	Interior painted metal door and window frames
Local Rep:	Dan Armstrong 860.922.3333

P-11

Item:	Paint
Manf:	Sherwin Williams
Color:	SW 7004 Snowbound
Finish:	Semi-gloss
Location:	Display case painted wood trim and interior wood panels
Local Rep:	Dan Armstrong 860.922.3333

CWT-1

Item:	Ceramic Wall Tile
Size:	4 ¼” x 4 ¼”
Thickness:	5/16”
Manf:	Daltile
Style:	Semi-Gloss
Color:	0190 Arctic White
Grout:	Latacrete 44 Bright White
Recycled Content:	32.4% Pre-consumer; 1.5% post consumer
Location:	All Toilet Rooms; see drawing 3/A230
Notes:	Made in USA, Green Squared Certified
Local Rep:	Lucia Franco 203.671.0930

CWT-2

Item:	Ceramic Wall Tile
Size:	4 ¼” x 4 ¼”
Thickness:	5/16”
Manf:	Daltile
Style:	Semi-Gloss
Color:	0152 Mint Ice
Grout:	Latacrete 44 Bright White
Recycled Content:	32.4% Pre-consumer; 1.5% post consumer
Location:	All Toilet Rooms; see drawing 3/A230
Notes:	Green Squared Certified
Local Rep:	Lucia Franco 203.671.0930

CWT-3

Item:	Ceramic Wall Tile
Size:	4 ¼” x 4 ¼”
Thickness:	5/16”
Manf:	Daltile
Style:	Festiva
Color:	QF46 Lapis
Grout:	Latacrete 44 Bright White
Recycled Content:	35% Pre-consumer
Location:	All Toilet Rooms; see drawing 3/A230
Local Rep:	Lucia Franco 203.671.0930

AWP-1

Item:	Acoustic Panel
Manf:	Guilford of Maine
Style:	Acoustical Wall Panel
Width:	66” min useable
Color/Finish:	2021 Pumpkin
Construction:	35% post-consumer recycled polyester, 65% pre-consumer recycled polyester
Location:	Cafeteria (B105)
Note:	See interior elevations for sizes
Local Rep:	Philip Harris 717.396 3159

AWP-2

Item:	Acoustic Panel
Manf:	Guilford of Maine
Style:	Acoustical Wall Panel
Width:	66” min useable
Color/Finish:	2026 Quarry Blue
Construction:	35% post-consumer recycled polyester, 65% pre-consumer recycled polyester
Location:	Cafeteria (B105), Gymnasium (B113)
Note:	see interior elevations for sizes
Local Rep:	Philip Harris 717.396 3159

AWP-3

Item:	Acoustic Panel
Manf:	Guilford of Maine
Style:	Acoustical Wall Panel
Width:	66” min useable
Color/Finish:	2017 Slate
Construction:	35% post-consumer recycled polyester, 65% pre-consumer recycled polyester
Location:	Cafeteria (B105), Gymnasium (B113)
Note:	see interior elevations for sizes
Local Rep:	Philip Harris 717.396 3159

AWP-4

Item:	Acoustic Panel
Manf:	Guilford of Maine
Style:	Acoustical Wall Panel
Width:	66” min useable
Color/Finish:	Lapis 2094
Construction:	35% post-consumer recycled polyester, 65% pre-consumer recycled polyester
Location:	Cafeteria (B105), Gymnasium (B113)
Note:	See interior elevations for sizes
Local Rep:	Philip Harris 717.396 3159

<u>CEILINGS</u>

ACT-1

Item:	Ceiling Tile
Manf:	Armstrong
Style:	Serpentina Waves
Size:	10’ X 4’
Color:	WH White
Location:	Media Reading C141
Note:	Perforation # R062
Local Rep:	Ashley Ward 860.490.5604

ACT-2

Item:	Acoustic Ceiling Tile
Manf:	Armstrong

Style:	Metal Works Torsion Spring; extra micro perforated
Size:	24” x 96” Perforated
Model #:	7212 LRM
Recycled Content:	98% Recycled content
Location:	Waiting 102; Conference room C143
Notes:	Box Molding # 7125; Extra microperforated
Local Rep:	Ashley Ward 860.490.5604

ACT-3

Item:	Acoustic Ceiling Tile
Manf:	Armstrong
Style:	Fintex wrapped Linear; 9/16” suprafine wrapped tegular suspension system
Size:	24” x 24”
Color:	8005 White
Recycled Content:	98% Recycled content
Location:	Ceiling at corridor ramps only
Local Rep:	Ashley Ward 860.490.5604

ACT-4

Item:	Acoustic Ceiling Tile
Manf:	Armstrong
Style:	School Zone Fine fissured
Size:	15/16” square lay-in prelude
Color:	1713 White
Recycled Content:	51% recycled content
Location:	Typical U.O.N.

ACT-5

Item:	Acoustic Ceiling Tile
Manf:	Armstrong
Style:	Clean room unperforated
Size:	
Color:	868 White
Recycled Content:	71% Recycled content
Location:	Kitchen B106, Office B107, Storage B108
Local Rep:	Ashley Ward 860.490.5604

MISC:

TB-1

Item:	Tack Board
Manf:	Forbo
Style:	Bulletin Board Surfacing Material
Color:	2162 (blue)
Location:	All tack boards
Note:	See Drawing A930 for sizes
Local Rep:	Rob Fortier 860.304.6197

TB-2

Item:	Fabric Wrap **(**Tack Board**)**

Manf:	Carnegie
Style:	6423 Strie
Color:	100 (White)
Location:	All display case tack boards
Local Rep:	Laura Noe 203.481.6566

TB-3

Item:	Tack Board
Manf:	Forbo
Style:	Bulletin Board Surfacing Material
Color:	2187 (lt grey)
Location:	All tack boards
Note:	See Drawing A930 for sizes
Local Rep:	Rob Fortier 860.304.6197

CC-1

Item:	Cubicle Curtain
Manf:	Carnegie
Color:	4
Uses:	Cubicles, Windows
Product Line:	Philosophy
Width:	72 inches
Contents:	56% Polyester, 44% FR Polyester
Flame Retardancy:	Passes NFPA 701
Location:	Nurses Office privacy curtain
Note:	Refer to project manual for mesh track and all necessary hardware.
Local Rep:	Laura Noe 203.481.6566

CASEWORK:

PL-1

Item:	Plastic Laminate
Manf:	Formica
Color:	Amber Maple 7012-58
Finish:	Matte Finish
Location:	Classroom Casework base and upper with matching PVC edge band
Local Rep:	Jeanmarie Bisson 617.217.8146

PL-2

Item:	Plastic Laminate
Manf:	Formica
Color:	White 949-SP
Finish:	Sculpted Finish
Location:	Upper side panels at Nurses hutch (C108)
Local Rep:	Jeanmarie Bisson 617.217.8146

PL-4

Item:	Plastic Laminate
Manf:	Formica

Color:	Steel 1484-MC
Finish:	MicroDot Finish
Location:	Located on upper cabinets; hutch doors only in Nurses Suite (C108)
Local Rep:	Jeanmarie Bisson 617.217.8146

PL-5

Item:	Plastic Laminate
Manf:	Formica
Color:	White 949-58
Finish:	Matte Finish
Location:	Interior of open cabinet space at hutch in Nurses Suite (C108)
Local Rep:	Jeanmarie Bisson 617.217.8146

SS-1

Item:	Solid Surface
Manf:	Corian
Style:	Healing Colors
Color:	Aqualite
Construction:	13% pre-consumer recycled content
Location:	Typical U.O.N.
Local Rep:	Bob Spang 617.777.3759

SS-2

Item:	Epoxy Resin Counter tops
Manf:	ChemTops
Style:	Classic top Beveled Edge Counter Top
Color:	Black Onyx
Location:	Art Classroom A131; Science Classroom A124

SS-3

Item:	Solid Surface
Manf:	Corian
Style:	Healing Colors
Color:	Antarctica
Construction:	6% pre-consumer recycled content
Location:	New Display Cases
Local Rep:	Bob Spang 617.777.3759

WD-1

Item:	Oak Veneer
Color:	Natural Oak, Clear Finished
Location:	Science Classroom A124
Note:	Quarter Sawn Red Oak

WD-2

Item:	Maple Veneer
Color:	Maple; Clear Finished
Location:	Main Office (, Media Center (
Note:	

GL-1

Item:	Glass
Manf:	Skyline Design
Style:	FosilGlas
Color:	Basalt-G
Location:	Existing corridor transom windows verify in field
Local Rep:	Deb Evans 718.376.2042

WINDOW TREATMENTS

RS-1

Item:	Roller Shade
Manf:	SWFContract Shading Systems
Style:	Sheerweave 2410
Color:	Pearl Gray
Openness:	3%
Standard Widths:	63” and 98”
Composition:	35% Fiberglass, 65% Vinyl on Fiberglass
Note:	Apply all fascia + associated trim
Location:	All exterior windows + interior doors/sidelights w/ glazing
Local Rep:	Ashley Brown (1-800-544-3587 ext 2585)

FA-1

Item:	Fascia
Manf:	SWFContract Shading Systems
Color:	871 white
Local Rep:	Ashley Brown (1-800-544-3587 ext 2585)

S-CONC

Item:	Sealed concrete
Notes:	See project manual

END OF SECTION 090000

SECTION 092216 - NON-STRUCTURAL METAL FRAMING

PART 1 - GENERAL

1.1 RELATED DOCUMENTS

A. Drawings and general provisions of the Contract, including General and Supplementary Conditions and Division 01 Specification Sections, apply to this Section.

1.2 SUMMARY

A. Section Includes:

1. Non-load-bearing steel framing systems for interior gypsum board assemblies.
2. Suspension systems for interior gypsum ceilings, soffits, and grid systems.

1.3 ACTION SUBMITTALS

A. Product Data: For each type of product.

B. HPBS Submittals:

1. Product Data for Section 16a-38k-6(d)(9): For products having recycled content, documentation indicating percentages by weight of postconsumer and preconsumer recycled content. Include statement indicating cost for each product having recycled content.

1.4 INFORMATIONAL SUBMITTALS

A. Evaluation Reports: For firestop tracks, from ICC-ES.

PART 2 - PRODUCTS

2.1 PERFORMANCE REQUIREMENTS

A. Fire-Test-Response Characteristics: For fire-resistance-rated assemblies that incorporate non-load-bearing steel framing, provide materials and construction identical to those tested in assembly indicated, according to ASTM E 119 by an independent testing agency.

B. STC-Rated Assemblies: For STC-rated assemblies, provide materials and construction identical to those tested in assembly indicated, according to ASTM E 90 and classified according to ASTM E 413 by an independent testing agency.

2.2 FRAMING SYSTEMS

A. Recycled Content of Steel Products: Postconsumer recycled content plus one-half of preconsumer recycled content not less than twenty-five percent (25%).

B. Framing Members, General: Comply with ASTM C 754 for conditions indicated.

1. Steel Sheet Components: Comply with ASTM C 645 requirements for metal unless otherwise indicated.
2. Protective Coating: ASTM A 653, G60, hot-dip galvanized unless otherwise indicated.

C. Studs and Runners: ASTM C 645.

1. Steel Studs and Runners:

   a. Minimum Base-Metal Thickness: 20 gauge.
   b. Depth: As indicated on Drawings.

2. Flexible Runners:

   a. Galvanized steel sheet track with sliding steel strap for creating intricate curves, bends, variable radii and arches.

      1) Products: Subject to compliance with requirements, available products that may be incorporated into the Work include, but are not limited to, the following:

         a) Flex-ability Concepts; **Flex-C Trac**.
         b) Dietrich Metal Framing; **Contour Track**.
         c) Substitutions: Under provisions of Section 012500 "Substitution Procedures".

D. Slip-Type Head Joints: Where indicated, provide the following:

1. Deflection Track: Steel sheet top runner manufactured to prevent cracking of finishes applied to interior partition framing resulting from deflection of structure above; in thickness not less than indicated for studs and in width to accommodate depth of studs.

   a. Products: Subject to compliance with requirements, available products that may be incorporated into the Work include, but are not limited to, the following:

      1) Dietrich Metal Framing; **SLP-TRK Slotted Deflection Track**
      2) MBA Building Supplies; **Slotted Deflecto Track**.
      3) Superior Metal Trim; **Superior Flex Track System (SFT)**
      4) Substitutions: Under provisions of Section 012500 "Substitution Procedures".

E. Firestop Tracks: Top runner manufactured to allow partition heads to expand and contract with movement of the structure while maintaining continuity of fire-resistance-rated assembly indicated; in thickness not less than indicated for studs and in width to accommodate depth of studs.

1. Products: Subject to compliance with requirements, available products that may be incorporated into the Work include, but are not limited to, the following:

   a. Fire Trak Corp.; **Fire Trak System**
   b. Grace Construction Products; **FlameSafe FlowTrak System**
   c. Metal-Lite, Inc.; **The System**

d. Substitutions: Under provisions of Section 012500 “Substitution Procedures”.

F. Flat Strap and Backing Plate: Steel sheet for blocking and bracing in length and width indicated.

1. Minimum Base-Metal Thickness: 0.018 inch.

G. Cold-Rolled Channel Bridging: Steel, 0.053-inch minimum base-metal thickness, with minimum ½-inch-wide flanges.

1. Depth: 1½ inches.
2. Clip Angle: Not less than 1½ by 1½ inches, 0.068-inch-thick, galvanized steel.

H. Hat-Shaped, Rigid Furring Channels: ASTM C 645.

1. Minimum Base-Metal Thickness: 0.018 inch.
2. Depth: 7/8 inch.

I. Z-Shaped Furring: With slotted or nonslotted web, face flange of 1¼ inches, wall attachment flange of 7/8 inch, minimum uncoated-metal thickness of 0.018 inch, and depth required to fit insulation thickness indicated.

2.3 SUSPENSION SYSTEMS

A. Tie Wire: ASTM A 641, Class 1 zinc coating, soft temper, 0.062-inch-diameter wire, or double strand of 0.048-inch-diameter wire.

B. Wire Hangers: ASTM A 641, Class 1 zinc coating, soft temper, 0.16 inch in diameter.

C. Carrying Channels: Cold-rolled, commercial-steel sheet with a base-metal thickness of 0.053 inch and minimum ½-inch-wide flanges.

1. Depth: As indicated on Drawings.

D. Furring Channels (Furring Members):

1. Steel Studs and Runners: ASTM C 645.

a. Minimum Base-Metal Thickness: 20 gauge.
b. Depth: As indicated on Drawings.

2. Hat-Shaped, Rigid Furring Channels: ASTM C 645, 7/8 inch deep.

a. Minimum Base-Metal Thickness: 0.018 inch.

E. Grid Suspension System for Gypsum Board Ceilings: ASTM C 645, direct-hung system composed of main beams and cross-furring members that interlock.

1. Products: Subject to compliance with requirements, available products that may be incorporated into the Work include, but are not limited to, the following:

a. Armstrong World Industries, Inc.; **Drywall Grid Systems**
b. Chicago Metallic Corporation; **Drywall Grid System**

c. USG Corporation; **Drywall Suspension System**
d. Substitutions: Under provisions of Section 012500 “Substitution Procedures”.

2.4 AUXILIARY MATERIALS

A. General: Provide auxiliary materials that comply with referenced installation standards.

1. Fasteners for Metal Framing: Of type, material, size, corrosion resistance, holding power, and other properties required to fasten steel members to substrates.

B. Isolation Strip at Exterior Walls: Provide one of the following:

1. Asphalt-Saturated Organic Felt: ASTM D 226, Type I (No. 15 asphalt felt), nonperforated.
2. Foam Gasket: Adhesive-backed, closed-cell vinyl foam strips that allow fastener penetration without foam displacement, 1/8 inch thick, in width to suit steel stud size.

C. Rigid Connections: Universal framing clip to attach and support rigid framing conditions including shear, tension and two-axis loading.

1. Products: Subject to compliance with requirements, available products that may be incorporated into the Work include, but are not limited to, the following:

a. Dietrich Metal Framing; **Uni-Clip**.
b. Substitutions: Under provisions of Section 012500 “Substitution Procedures”.

PART 3 - EXECUTION

3.1 EXAMINATION

A. Examine areas and substrates, with Installer present, and including welded hollow-metal frames, cast-in anchors, and structural framing, for compliance with requirements and other conditions affecting performance of the Work.

B. Proceed with installation only after unsatisfactory conditions have been corrected.

3.2 PREPARATION

A. Suspended Assemblies: Coordinate installation of suspension systems with installation of overhead structure to ensure that inserts and other provisions for anchorages to building structure have been installed to receive hangers at spacing required to support the Work and that hangers will develop their full strength.

B. Coordination with Sprayed Fire-Resistive Materials:

1. Before sprayed fire-resistive materials are applied, attach offset anchor plates or ceiling runners (tracks) to surfaces indicated to receive sprayed fire-resistive materials. Where offset anchor plates are required, provide continuous plates fastened to building structure not more than 24 inches o.c.
2. After sprayed fire-resistive materials are applied, remove them only to extent necessary for installation of non-load-bearing steel framing. Do not reduce thickness of fire-

resistive materials below that required for fire-resistance ratings indicated. Protect adjacent fire-resistive materials from damage.

3.3 INSTALLATION, GENERAL

A. Installation Standard: ASTM C 754.

1. Gypsum Board Assemblies: Also comply with requirements in ASTM C 840 that apply to framing installation.

B. Install supplementary framing, and blocking to support fixtures, equipment services, heavy trim, grab bars, toilet accessories, furnishings, or similar construction.

C. Install bracing at terminations in assemblies.

D. Do not bridge building control and expansion joints with non-load-bearing steel framing members. Frame both sides of joints independently.

3.4 INSTALLING FRAMED ASSEMBLIES

A. Install framing system components according to spacings indicated, but not greater than spacings required by referenced installation standards for assembly types.

B. Where studs are installed directly against exterior masonry walls or dissimilar metals at exterior walls, install isolation strip between studs and exterior wall.

C. Install studs so flanges within framing system point in same direction.

D. Install tracks (runners) at floors and overhead supports. Extend framing full height to structural supports or substrates above suspended ceilings except where partitions are indicated to terminate at suspended ceilings. Continue framing around ducts penetrating partitions above ceiling.

1. Slip-Type Head Joints: Where framing extends to overhead structural supports, install to produce joints at tops of framing systems that prevent axial loading of finished assemblies.
2. Door Openings: Screw vertical studs at jambs to jamb anchor clips on door frames.

   a. Install two studs at each jamb unless otherwise indicated.
   b. Extend jamb studs through suspended ceilings and attach to underside of overhead structure.

3. Other Framed Openings: Frame openings other than door openings the same as required for door openings unless otherwise indicated. Install framing below sills of openings to match framing required above door heads.
4. Fire-Resistance-Rated Partitions: Install framing to comply with fire-resistance-rated assembly indicated and support closures and to make partitions continuous from floor to underside of solid structure.

   a. Firestop Track: Where indicated, install to maintain continuity of fire-resistance-rated assembly indicated.

5. Sound-Rated Partitions: Install framing to comply with sound-rated assembly indicated.
6. Curved Partitions:

    a. Bend track to uniform curve and locate straight lengths so they are tangent to arcs.
    b. Begin and end each arc with a stud, and space intermediate studs equally along arcs. On straight lengths of no fewer than two (2) studs at ends of arcs, place studs 6 inches o.c.

E. Direct Furring:

1. Attach to concrete or masonry with stub nails, screws designed for masonry attachment, or powder-driven fasteners spaced 24 inches o.c.

F. Z-Furring Members:

1. Erect insulation, specified in Section 072100 "Thermal Insulation," vertically and hold in place with Z-furring members spaced 24 inches o.c.
2. Except at exterior corners, securely attach narrow flanges of furring members to wall with concrete stub nails, screws designed for masonry attachment, or powder-driven fasteners spaced 24 inches o.c.
3. At exterior corners, attach wide flange of furring members to wall with short flange extending beyond corner; on adjacent wall surface, screw-attach short flange of furring channel to web of attached channel. At interior corners, space second member no more than 12 inches from corner and cut insulation to fit.

G. Installation Tolerance: Install each framing member so fastening surfaces vary not more than 1/8 inch from the plane formed by faces of adjacent framing.

3.5 INSTALLING SUSPENSION SYSTEMS

A. Install suspension system components according to spacings indicated, but not greater than spacings required by referenced installation standards for assembly types.

B. Isolate suspension systems from building structure where they abut or are penetrated by building structure to prevent transfer of loading imposed by structural movement.

C. Suspend hangers from building structure as follows:

1. Install hangers plumb and free from contact with insulation or other objects within ceiling plenum that are not part of supporting structural or suspension system.

    a. Splay hangers only where required to miss obstructions and offset resulting horizontal forces by bracing, countersplaying, or other equally effective means.

2. Where width of ducts and other construction within ceiling plenum produces hanger spacings that interfere with locations of hangers required to support standard suspension system members, install supplemental suspension members and hangers in the form of trapezes or equivalent devices.

    a. Size supplemental suspension members and hangers to support ceiling loads within performance limits established by referenced installation standards.

3. Wire Hangers: Secure by looping and wire tying, either directly to structures or to inserts, eye screws, or other devices and fasteners that are secure and appropriate for substrate, and in a manner that will not cause hangers to deteriorate or otherwise fail.
4. Do not connect or suspend steel framing from ducts, pipes, or conduit.

D. Fire-Resistance-Rated Assemblies: Wire tie furring channels to supports.

E. Seismic Bracing: Sway-brace suspension systems with hangers used for support.

F. Grid Suspension Systems: Attach perimeter wall track or angle where grid suspension systems meet vertical surfaces. Mechanically join main beam and cross-furring members to each other and butt-cut to fit into wall track.

G. Installation Tolerances: Install suspension systems that are level to within 1/8 inch in 12 feet measured lengthwise on each member that will receive finishes and transversely between parallel members that will receive finishes.

END OF SECTION 092216

SECTION 092400 - CEMENT PLASTERING

PART 1 - GENERAL

1.1 RELATED DOCUMENTS

A. Drawings and general provisions of the Contract, including General and Supplementary Conditions and Division 01 Specification Sections, apply to this Section.

1.2 SUMMARY

A. Section Includes:

1. Exterior Portland cement plasterwork (stucco) on monolithic concrete.

1.3 ACTION SUBMITTALS

A. Product Data: For each type of product indicated.

B. HPBS Submittals:

1. Product Data for Section 16a-38k-6(9)(d): For products having recycled content, documentation indicating percentages by weight of postconsumer and preconsumer recycled content. Include statement indicating cost for each product having recycled content.
2. Product Data for Section 16a-38l-5(d): For sealants, documentation including printed statement of VOC content.

C. Shop Drawings: Show locations and installation of control and expansion joints including plans, elevations, sections, details of components, and attachments to other work.

D. Samples for Initial Selection: For each type of factory-prepared finish coat indicated.

E. Samples for Verification: For each type of factory-prepared, colored, and textured finish coat indicated; 12 by 12 inches, and prepared on rigid backing.

1.4 DELIVERY, STORAGE, AND HANDLING

A. Store materials inside under cover and keep them dry and protected against damage from weather, direct sunlight, surface contamination, corrosion, construction traffic, and other causes.

1.5 PROJECT CONDITIONS

A. Comply with ASTM C 926 requirements.

B. Exterior Plasterwork:

1. Apply and cure plaster to prevent plaster drying out during curing period. Use procedures required by climatic conditions, including moist curing, providing coverings, and providing barriers to deflect sunlight and wind.

2. Apply plaster when ambient temperature is greater than 40 deg F (4.4 deg C).
3. Protect plaster coats from freezing for not less than forty-eight (48) hours after set of plaster coat has occurred.

C. Factory-Prepared Finishes: Comply with manufacturer's written recommendations for environmental conditions for applying finishes.

PART 2 - PRODUCTS

2.1 MISCELLANEOUS MATERIALS

A. Water for Mixing: Potable and free of substances capable of affecting plaster set or of damaging plaster, lath, or accessories.

B. Fiber for Base Coat: Alkaline-resistant glass or polypropylene fibers, ½ inch long, free of contaminants, manufactured for use in Portland cement plaster.

C. Bonding Compound: ASTM C 932.

2.2 PLASTER MATERIALS

A. Portland Cement: ASTM C 150, Type I.

1. Color for Finish Coats: White.

B. Masonry Cement: ASTM C 91, Type N.

1. Color for Finish Coats: White.

C. Colorants for Job-Mixed Finish Coats: Colorfast mineral pigments that produce finish plaster color to match Architect's sample.

D. Lime: ASTM C 206, Type S; or ASTM C 207, Type S.

E. Sand Aggregate: ASTM C 897.

1. Color for Job-Mixed Finish Coats: In color matching Architect's sample.

2.3 PLASTER MIXES

A. General: Comply with ASTM C 926 for applications indicated.

1. Fiber Content: Add fiber to base-coat mixes after ingredients have mixed at least two minutes. Comply with fiber manufacturer's written instructions for fiber quantities in mixes, but do not exceed 1 lb of fiber/cu. yd. of cementitious materials.

B. Base-Coat Mixes: Single base coats for two-coat plasterwork as follows:

1. Portland and Masonry Cement Mix: For cementitious material, mix one (1) part Portland cement and one (1) part masonry cement. Use two and one-half (2½) to four (4) parts aggregate per part of cementitious material.

C. Job-Mixed Finish-Coat Mixes:

1. Portland Cement Mix: For cementitious materials, mix one (1) part Portland cement and one and one-half (1½) to two (2) parts lime. Use one and one-half (1½) to three (3) parts aggregate per part of cementitious material.

PART 3 - EXECUTION

3.1 EXAMINATION

A. Examine areas and substrates, with Installer present, and including welded hollow-metal frames, cast-in anchors, and structural framing, for compliance with requirements and other conditions affecting performance of the Work.

B. Proceed with installation only after unsatisfactory conditions have been corrected.

3.2 PREPARATION

A. Protect adjacent work from soiling, spattering, moisture deterioration, and other harmful effects caused by plastering.

B. Prepare solid substrates for plaster that are smooth or that do not have the suction capability required to bond with plaster according to ASTM C 926.

3.3 PLASTER APPLICATION

A. General: Comply with ASTM C 926.

1. Do not deviate more than plus or minus ¼ inch in 10 feet from a true plane in finished plaster surfaces, as measured by a 10-foot straightedge placed on surface.

B. Bonding Compound: Apply on concrete plaster bases.

C. Walls; Base-Coat Mix: Scratch coat for two-coat plasterwork, ¼ inch thick on concrete.

1. Portland and masonry cement mixes.

D. Plaster Finish Coats: Apply <u>to match finish</u> of adjacent surfaces.

3.4 PLASTER REPAIRS

A. Repair or replace work to eliminate cracks, dents, blisters, buckles, crazing and check cracking, dry outs, efflorescence, sweat outs, and similar defects and where bond to substrate has failed.

3.5 PROTECTION

A. Remove temporary protection and enclosure of other work. Promptly remove plaster from door frames, windows, and other surfaces not indicated to be plastered. Repair floors, walls, and other surfaces stained, marred, or otherwise damaged during plastering.

END OF SECTION 092400

SECTION 092900 - GYPSUM BOARD

PART 1 - GENERAL

1.1 RELATED DOCUMENTS

A. Drawings and general provisions of the Contract, including General and Supplementary Conditions and Division 01 Specification Sections, apply to this Section.

1.2 SUMMARY

A. Section Includes:

1. Interior gypsum board.

B. Related Requirements:

1. Section 092216 "Non-Structural Metal Framing" for non-structural framing and suspension systems that support gypsum board panels.

1.3 ACTION SUBMITTALS

A. Product Data: For each type of product.

B. HPBS Submittals:

1. Product Data for Section 16a-38k-6(d)(9): For products having recycled content, documentation indicating percentages by weight of postconsumer and preconsumer recycled content. Include statement indicating cost for each product having recycled content.
2. Product Certificates for Section 16a-38k-6(d)(10): For products and materials required to comply with requirements for regional materials, certificates indicating location of material manufacturer and point of extraction, harvest, or recovery for each raw material. Include statement indicating distance to Project, cost for each regional material, and fraction by weight that is considered regional.
3. Product Data for Section 16a-38k-5(d): For adhesives used to laminate gypsum board panels to substrates, documentation including printed statement of VOC content.

C. Samples: For the following products:

1. Trim Accessories: Full-size Sample in 12-inch-long length for each trim accessory indicated.

1.4 DELIVERY, STORAGE AND HANDLING

A. Store materials inside under cover and keep them dry and protected against weather, condensation, direct sunlight, construction traffic, and other potential causes of damage. Stack panels flat and supported on risers on a flat platform to prevent sagging.

1.5 FIELD CONDITIONS

A. Environmental Limitations: Comply with ASTM C 840 requirements or gypsum board manufacturer's written recommendations, whichever are more stringent.

B. Do not install paper-faced gypsum panels until installation areas are enclosed and conditioned.

C. Do not install panels that are wet, those that are moisture damaged, and those that are mold damaged.

1. Indications that panels are wet or moisture damaged include, but are not limited to, discoloration, sagging, or irregular shape.
2. Indications that panels are mold damaged include, but are not limited to, fuzzy or splotchy surface contamination and discoloration.

PART 2 - PRODUCTS

2.1 PERFORMANCE REQUIREMENTS

A. Fire-Resistance-Rated Assemblies: For fire-resistance-rated assemblies, provide materials and construction identical to those tested in assembly indicated according to ASTM E 119 by an independent testing agency.

B. STC-Rated Assemblies: For STC-rated assemblies, provide materials and construction identical to those tested in assembly indicated according to ASTM E 90 and classified according to ASTM E 413 by an independent testing agency.

2.2 GYPSUM BOARD, GENERAL

A. Recycled Content of Gypsum Panel Products: Postconsumer recycled content plus one-half of preconsumer recycled content not less than thirty-five percent (35%).

B. Regional Materials: Gypsum panel products shall be manufactured within five hundred (500) miles of Project site from materials that have been extracted, harvested, or recovered, as well as manufactured, within five hundred (500) miles of Project site.

C. Size: Provide maximum lengths and widths available that will minimize joints in each area and that correspond with support system indicated.

2.3 INTERIOR GYPSUM BOARD

A. Manufacturers: Subject to compliance with requirements, available manufacturers offering products that may be incorporated into the Work include, but are not limited to, the following:

1. Georgia-Pacific Gypsum LLC.
2. National Gypsum Company.
3. USG Corporation.
4. Substitutions: Under provisions of Section 012500 “Substitution Procedures”.

B. Abuse-Resistant Gypsum Board: ASTM C 1629, Level 1.

1. Core: As indicated on Drawings.
2. Long Edges: Tapered.
3. Mold Resistance: ASTM D 3273, score of 10 as rated according to ASTM D 3274.

C. Flexible Gypsum Board: ASTM C 1396. Manufactured to bend to fit radii and to be more flexible than standard regular-type gypsum board of same thickness.

1. Thickness: ¼ inch.
2. Long Edges: Tapered.

2.4 TRIM ACCESSORIES

A. Interior Trim: ASTM C 1047.

1. Material: Galvanized or aluminum-coated steel sheet or rolled zinc.
2. Shapes:

a. Cornerbead.
b. Bullnose bead.
c. LC-Bead: J-shaped; exposed long flange receives joint compound.
d. L-Bead: L-shaped; exposed long flange receives joint compound.
e. U-Bead: J-shaped; exposed short flange does not receive joint compound.
f. Expansion (control) joint.

B. Aluminum Trim: Extruded accessories of profiles and dimensions indicated.

1. Manufacturers: Subject to compliance with requirements, available manufacturers offering products that may be incorporated into the Work include, but are not limited to, the following:

a. Fry Reglet Corp.
b. Gordon, Inc.
c. Pittcon Industries
d. Substitutions: Under provisions of Section 012500 “Substitution Procedures”.

2. Aluminum: Alloy and temper with not less than the strength and durability properties of ASTM B 221, Alloy 6063-T5.
3. Finish: Mill.

2.5 JOINT TREATMENT MATERIALS

A. General: Comply with ASTM C 475.

B. Joint Tape:

1. Interior Gypsum Board: Paper.

C. Joint Compound for Interior Gypsum Board: For each coat use formulation that is compatible with other compounds applied on previous or for successive coats.

1. Prefilling: At open joints, rounded or beveled panel edges, and damaged surface areas, use setting-type taping compound.

2. Embedding and First Coat: For embedding tape and first coat on joints, fasteners, and trim flanges, use drying-type, all-purpose compound.
3. Fill Coat: For second coat, use drying-type, all-purpose compound.
4. Finish Coat: For third coat, use drying-type, all-purpose compound.
5. Skim Coat: For final coat of Level 5 finish, use drying-type, all-purpose compound.

2.6 AUXILIARY MATERIALS

A. General: Provide auxiliary materials that comply with referenced installation standards and manufacturer's written recommendations.

B. Steel Drill Screws: ASTM C 1002, unless otherwise indicated.

C. Sound Attenuation Blankets: ASTM C 665, Type I (blankets without membrane facing) produced by combining thermosetting resins with mineral fibers manufactured from glass, slag wool, or rock wool.

1. Fire-Resistance-Rated Assemblies: Comply with mineral-fiber requirements of assembly.
2. Recycled Content of Blankets: Postconsumer recycled content plus one-half of preconsumer recycled content not less than twenty-five percent (25%).

D. Acoustical Joint Sealant: Manufacturer's standard nonsag, paintable, nonstaining latex sealant complying with ASTM C 834. Product effectively reduces airborne sound transmission through perimeter joints and openings in building construction as demonstrated by testing representative assemblies according to ASTM E 90.

1. Products: Subject to compliance with requirements, available products that may be incorporated into the Work include, but are not limited to, the following:

a. Pecora Corporation; **AC-20 FTR**
b. Specified Technologies, Inc.; **Smoke N Sound Acoustical Sealant**
c. USG Corporation; **SHEETROCK Acoustical Sealant**
d. Substitutions: Under provisions of Section 012500 “Substitution Procedures”.

2. Acoustical joint sealant shall have a VOC content of 250 g/L or less when calculated according to 40 CFR 59, Subpart D (EPA Method 24).

E. Thermal Insulation: As specified in Section 072100 "Thermal Insulation."

PART 3 - EXECUTION

3.1 EXAMINATION

A. Examine areas and substrates including welded hollow-metal frames and framing, with Installer present, for compliance with requirements and other conditions affecting performance.

B. Examine panels before installation. Reject panels that are wet, moisture damaged, and mold damaged.

C. Proceed with installation only after unsatisfactory conditions have been corrected.

3.2 APPLYING AND FINISHING PANELS, GENERAL

A. Comply with ASTM C 840.

B. Install ceiling panels across framing to minimize the number of abutting end joints and to avoid abutting end joints in central area of each ceiling. Stagger abutting end joints of adjacent panels not less than one framing member.

C. Install panels with face side out. Butt panels together for a light contact at edges and ends with not more than 1/16 inch of open space between panels. Do not force into place.

D. Locate edge and end joints over supports, except in ceiling applications where intermediate supports or gypsum board back-blocking is provided behind end joints. Do not place tapered edges against cut edges or ends. Stagger vertical joints on opposite sides of partitions. Do not make joints other than control joints at corners of framed openings.

E. Form control and expansion joints with space between edges of adjoining gypsum panels.

F. Cover both faces of support framing with gypsum panels in concealed spaces (above ceilings, etc.), except in chases braced internally.

1. Unless concealed application is indicated or required for sound, fire, air, or smoke ratings, coverage may be accomplished with scraps of not less than 8 sq. ft. in area.
2. Fit gypsum panels around ducts, pipes, and conduits.
3. Where partitions intersect structural members projecting below underside of floor/roof slabs and decks, cut gypsum panels to fit profile formed by structural members; allow ¼ to 3/8-inch-wide joints to install sealant.

G. Isolate perimeter of gypsum board applied to non-load-bearing partitions at structural abutments, except floors. Provide ¼ to ½ inch-wide spaces at these locations and trim edges with edge trim where edges of panels are exposed. Seal joints between edges and abutting structural surfaces with acoustical sealant.

H. Attachment to Steel Framing: Attach panels so leading edge or end of each panel is attached to open (unsupported) edges of stud flanges first.

I. STC-Rated Assemblies: Seal construction at perimeters, behind control joints, and at openings and penetrations with a continuous bead of acoustical sealant. Install acoustical sealant at both faces of partitions at perimeters and through penetrations. Comply with ASTM C 919 and with manufacturer's written recommendations for locating edge trim and closing off sound-flanking paths around or through assemblies, including sealing partitions above acoustical ceilings.

J. Install sound attenuation blankets before installing gypsum panels unless blankets are readily installed after panels have been installed on one side.

3.3 APPLYING INTERIOR GYPSUM BOARD

A. Install interior gypsum board where indicated on Drawings.

B. Single-Layer Application:

1. On ceilings, apply gypsum panels before wall/partition board application to greatest extent possible and at right angles to framing unless otherwise indicated.
2. On partitions/walls, apply gypsum panels in most economical direction, with ends and edges occurring over firm bearing unless otherwise indicated or required by fire-resistance-rated assembly, and minimize end joints.

    a. Stagger abutting end joints not less than one framing member in alternate courses of panels.
    b. At stairwells and other high walls, install panels horizontally unless otherwise indicated or required by fire-resistance-rated assembly.

3. Fastening Methods: Apply gypsum panels to supports with steel drill screws.

C. Multilayer Application:

1. On ceilings, apply gypsum board indicated for base layers before applying base layers on walls/partitions; apply face layers in same sequence. Apply base layers at right angles to framing members and offset face-layer joints one framing member, 16 inches minimum, from parallel base-layer joints, unless otherwise indicated or required by fire-resistance-rated assembly.
2. On partitions/walls, apply gypsum board indicated for base layers horizontally (perpendicular to framing) and face layers vertically (parallel to framing) with joints of base layers located over stud or furring member and face-layer joints offset at least one (1) stud or furring member with base-layer joints, unless otherwise indicated or required by fire-resistance-rated assembly. Stagger joints on opposite sides of partitions.
3. Fastening Methods: Fasten base layers and face layers separately to supports with screws.

D. Curved Surfaces:

1. Install panels horizontally (perpendicular to supports) and unbroken, to extent possible, across curved surface plus 12-inch-long straight sections at ends of curves and tangent to them.
2. For double-layer construction, fasten base layer to studs with screws 16 inches o.c. Center gypsum board face layer over joints in base layer, and fasten to studs with screws spaced 12 inches o.c.

3.4 INSTALLING TRIM ACCESSORIES

A. General: For trim with back flanges intended for fasteners, attach to framing with same fasteners used for panels. Otherwise, attach trim according to manufacturer's written instructions.

B. Control Joints: Install control joints according to ASTM C 840 and in specific locations approved by Architect for visual effect.

C. Interior Trim: Install in the following locations:

1. Cornerbead: Use at outside corners, unless otherwise indicated.
2. Bullnose Bead: Use at outside corners.
3. LC-Bead: Use at exposed panel edges.

4. L-Bead: Use where indicated.
5. U-Bead: Use at exposed panel edges.

D. Aluminum Trim: Install in locations indicated on Drawings.

3.5 FINISHING GYPSUM BOARD

A. General: Treat gypsum board joints, interior angles, edge trim, control joints, penetrations, fastener heads, surface defects, and elsewhere as required to prepare gypsum board surfaces for decoration. Promptly remove residual joint compound from adjacent surfaces.

B. Prefill open joints, rounded or beveled edges, and damaged surface areas.

C. Apply joint tape over gypsum board joints, except for trim products specifically indicated as not intended to receive tape.

D. Gypsum Board Finish Levels: Finish panels to levels indicated below and according to ASTM C 840:

1. Level 1: Ceiling plenum areas, concealed areas, and where indicated.
2. Level 4: At panel surfaces that will be exposed to view, receiving wallcoverings and flat paints.

   a. Primer and its application to surfaces are specified in Section 099123 "Interior Painting."

3. Level 5: At panel surfaces that will be exposed to view, receiving gloss and semi-gloss enamels.

   a. Primer and its application to surfaces are specified in Section 099123 "Interior Painting."

3.6 PROTECTION

A. Protect adjacent surfaces from drywall compound and promptly remove from floors and other non-drywall surfaces. Repair surfaces stained, marred, or otherwise damaged during drywall application.

B. Protect installed products from damage from weather, condensation, direct sunlight, construction, and other causes during remainder of the construction period.

C. Remove and replace panels that are wet, moisture damaged, and mold damaged.

1. Indications that panels are wet or moisture damaged include, but are not limited to, discoloration, sagging, or irregular shape.
2. Indications that panels are mold damaged include, but are not limited to, fuzzy or splotchy surface contamination and discoloration.

END OF SECTION 092900

SECTION 093000 - TILING

PART 1 - GENERAL

1.1 RELATED DOCUMENTS

A. Drawings and general provisions of the Contract, including General and Supplementary Conditions and Division 01 Specification Sections, apply to this Section.

1.2 SUMMARY

A. Section Includes:

1. Ceramic mosaic tile.
2. Quarry tile.
3. Glazed wall tile.
4. Crack isolation membrane.
5. Metal edge strips.

B. Related Requirements:

1. Section 079200 "Joint Sealants" for sealing of expansion, contraction, control, and isolation joints in tile surfaces.

1.3 DEFINITIONS

A. General: Definitions in the ANSI A108 series of tile installation standards and in ANSI A137.1 apply to Work of this Section unless otherwise specified.

B. ANSI A108 Series: ANSI A108.01, ANSI A108.02, ANSI A108.1A, ANSI A108.1B, ANSI A108.1C, ANSI A108.4, ANSI A108.5, ANSI A108.6, ANSI A108.8, ANSI A108.9, ANSI A108.10, ANSI A108.11, ANSI A108.12, ANSI A108.13, ANSI A108.14, ANSI A108.15, ANSI A108.16, and ANSI A108.17, which are contained in its "Specifications for Installation of Ceramic Tile."

1.4 PREINSTALLATION MEETINGS

A. Preinstallation Conference: Conduct conference at Project site.

1. Review requirements in ANSI A108.01 for substrates and for preparation by other trades.

1.5 ACTION SUBMITTALS

A. Product Data: For each type of product.

B. HPBS Submittals:

1. Product Data for Section 16a-38k-5(d): For adhesives and grout sealers, documentation including printed statement of VOC content.

C. Shop Drawings: Show locations of each type of tile and tile pattern. Show widths, details, and locations of expansion, contraction, control, and isolation joints in tile substrates and finished tile surfaces.

D. Samples for Verification:

1. Full-size units of each type and composition of tile and for each color and finish required. For ceramic mosaic tile in color blend patterns, provide full sheets of each color blend.
2. Full-size units of each type of trim and accessory for each color and finish required.
3. Metal edge strips in 6-inch lengths.

1.6 INFORMATIONAL SUBMITTALS

A. Qualification Data: For Installer.

B. Product Test Reports: For tile-setting and -grouting products and certified porcelain tile.

1.7 MAINTENANCE MATERIAL SUBMITTALS

A. Furnish extra materials that match and are from same production runs as products installed and that are packaged with protective covering for storage and identified with labels describing contents.

1. Tile and Trim Units: Furnish quantity of full-size units equal to three percent (3%) of amount installed for each type, composition, color, pattern, and size indicated.
2. Grout: Furnish quantity of grout equal to three percent (3%) of amount installed for each type, composition, and color indicated.

1.8 QUALITY ASSURANCE

A. Installer Qualifications:

1. Installer employs installers recognized by the U.S. Department of Labor as Journeyman Tile Layers.

B. Mockups: Build mockups to verify selections made under Sample submittals and to demonstrate aesthetic effects and set quality standards for materials and execution.

1. Build mockup of each type of floor tile installation.
2. Build mockup of each type of wall tile installation.
3. Subject to compliance with requirements, approved mockups may become part of the completed Work if undisturbed at time of Substantial Completion.

1.9 DELIVERY, STORAGE, AND HANDLING

A. Deliver and store packaged materials in original containers with seals unbroken and labels intact until time of use. Comply with requirements in ANSI A137.1 for labeling tile packages.

B. Store tile and cementitious materials on elevated platforms, under cover, and in a dry location.

C. Store aggregates where grading and other required characteristics can be maintained and contamination can be avoided.

D. Store liquid materials in unopened containers and protected from freezing.

1.10 FIELD CONDITIONS

A. Environmental Limitations: Do not install tile until construction in spaces is complete and ambient temperature and humidity conditions are maintained at the levels indicated in referenced standards and manufacturer's written instructions.

PART 2 - PRODUCTS

2.1 MANUFACTURERS

A. Source Limitations for Tile: Obtain tile of each type and color or finish from single source or producer.

1. Obtain tile of each type and color or finish from same production run and of consistent quality in appearance and physical properties for each contiguous area.

B. Source Limitations for Setting and Grouting Materials: Obtain ingredients of a uniform quality for each mortar, adhesive, and grout component from single manufacturer and each aggregate from single source or producer.

1. Obtain setting and grouting materials, except for unmodified Portland cement and aggregate, from single manufacturer.
2. Obtain crack isolation membrane, except for sheet products, from manufacturer of setting and grouting materials.

C. Source Limitations for Other Products: Obtain each of the following products specified in this Section from a single manufacturer:

1. Stone thresholds.
2. Crack isolation membrane.
3. Metal edge strips.

2.2 PRODUCTS, GENERAL

A. ANSI Ceramic Tile Standard: Provide tile that complies with ANSI A137.1 for types, compositions, and other characteristics indicated.

1. Provide tile complying with Standard grade requirements.

B. ANSI Standards for Tile Installation Materials: Provide materials complying with ANSI A108.02, ANSI standards referenced in other Part 2 articles, ANSI standards referenced by TCNA installation methods specified in tile installation schedules, and other requirements specified.

C. Factory Blending: For tile exhibiting color variations within ranges, blend tile in factory and package so tile units taken from one package show same range in colors as those taken from other packages and match approved Samples.

D. Mounting: For factory-mounted tile, provide back- or edge-mounted tile assemblies as standard with manufacturer unless otherwise indicated.

2.3 TILE PRODUCTS

A. Ceramic Tile Type (**PFT1**): Factory-mounted unglazed, blended ceramic mosaic tile.

1. Basis-of-Design Product:

   a. Dal-Tile Corporation

2. Manufacturers: Subject to compliance with requirements, available manufacturers offering products that may be incorporated into the Work include, but are not limited to, the following:

   a. American Olean Corporation
   b. Crossville, Inc.
   c. Substitutions: Under provisions of Section 012500 “Substitution Procedures”.

3. Composition: Porcelain.
4. Certification: Porcelain tile certified by the Porcelain Tile Certification Agency.
5. Surface: Nonabrasive, smooth.
6. Coefficient of Friction: ASTM C 1028.

   a. Wet: Not less than 0.60.
   b. Dry: Not less than 0.70.

7. Module Size, Thickness, Tile Color and Pattern and Grout Color: As indicated in Section 090000 “Schedule of Finishes”.
8. Trim Units: Coordinated with sizes and coursing of adjoining flat tile where applicable and matching characteristics of adjoining flat tile. Provide shapes as follows, selected from manufacturer's standard shapes:

   a. Base Cove (**PB1**): Cove, module size and model as indicated in Section 090000 “Schedule of Finishes”.
   b. Internal and External Corners: Units as required.

B. Ceramic Tile Type (**QT1**): Unglazed square-edged quarry tile.

1. Basis-of-Design Product:

   a. Dal-Tile Corporation

2. Manufacturers: Subject to compliance with requirements, available manufacturers offering products that may be incorporated into the Work include, but are not limited to, the following:

   a. American Olean Corporation

b. Metropolitan Ceramics
c. Substitutions: Under provisions of Section 012500 “Substitution Procedures”.

3. Wearing Surface: Abrasive aggregate embedded in surface.
4. Coefficient of Friction: ASTM C 1028.

a. Wet: Not less than 1.00.
b. Dry: Not less than 1.00.

5. Size, Thickness, Tile Color and Pattern and Grout Color: As indicated in Section 090000 “Schedule of Finishes”.
6. Trim Units: Coordinated with sizes and coursing of adjoining flat tile where applicable and matching characteristics of adjoining flat tile. Provide shapes as follows, selected from manufacturer's standard shapes:

a. Base (**QB1**): Coved with surface bullnose top edge, face size as indicated in Section 090000 “Schedule of Finishes”.
b. Internal and External Corners: Units as required.

C. Ceramic Tile Type (**CWT1**, **CWT2**): Glazed wall tile.

1. Basis-of-Design Product:

a. Dal-Tile Corporation

2. Manufacturers: Subject to compliance with requirements, available manufacturers offering products that may be incorporated into the Work include, but are not limited to, the following:

a. American Olean Corporation
b. Crossville, Inc.
c. Substitutions: Under provisions of Section 012500 “Substitution Procedures”.

3. Module Size, Thickness, Finish, Tile Color and Pattern and Grout Color: As indicated in Section 090000 “Schedule of Finishes”.
4. Trim Units: Coordinated with sizes and coursing of adjoining flat tile where applicable and matching characteristics of adjoining flat tile. Provide shapes as follows, selected from manufacturer's standard shapes:

a. Wainscot Cap for Thinset Mortar Installations: Surface bullnose, module size and model as indicated in Section 090000 “Schedule of Finishes”.
b. External Corners for Thinset Mortar Installations: Surface bullnose, same size as adjoining flat tile.
c. Internal Corners: Field-butted square corners. For coved base and cap use angle pieces designed to fit with stretcher shapes.

2.4 CRACK ISOLATION MEMBRANE

A. General: Manufacturer's standard product that complies with ANSI A118.12 for high performance and is recommended by the manufacturer for the application indicated. Include reinforcement and accessories recommended by manufacturer.

B. Chlorinated Polyethylene Sheet: Nonplasticized, chlorinated polyethylene faced on both sides with nonwoven polyester fabric; 0.030-inch nominal thickness.

1. Products: Subject to compliance with requirements, available products that may be incorporated into the Work include, but are not limited to, the following:

a. Noble Company (The); **Nobleseal CIS**
b. Substitutions: Under provisions of Section 012500 “Substitution Procedures”.

2.5 SETTING MATERIALS

A. Latex-Portland Cement Mortar (Thinset): ANSI A118.4.

1. Manufacturers: Subject to compliance with requirements, available manufacturers offering products that may be incorporated into the Work include, but are not limited to, the following:

a. Bostik, Inc.
b. Custom Building Products
c. Laticrete International, Inc.
d. MAPEI Corporation
e. Substitutions: Under provisions of Section 012500 “Substitution Procedures”.

2. Provide prepackaged, dry-mortar mix containing dry, redispersible, vinyl acetate or acrylic additive to which only water must be added at Project site.
3. For wall applications, provide mortar that complies with requirements for nonsagging mortar in addition to the other requirements in ANSI A118.4.

2.6 GROUT MATERIALS

A. Standard Cement Grout: ANSI A118.6.

1. Basis-of-Design Product:

a. Laticrete International, Inc.

2. Manufacturers: Subject to compliance with requirements, available manufacturers offering products that may be incorporated into the Work include, but are not limited to, the following:

a. Bostik, Inc.
b. Custom Building Products
c. MAPEI Corporation
d. Substitutions: Under provisions of Section 012500 “Substitution Procedures”.

2.7 MISCELLANEOUS MATERIALS

A. Trowelable Underlayments and Patching Compounds: Latex-modified, Portland cement-based formulation provided or approved by manufacturer of tile-setting materials for installations indicated.

B. Metal Edge Strips: Angle or L-shaped, height to match tile and setting-bed thickness, metallic or combination of metal and PVC or neoprene base, designed specifically for flooring applications; satin anodized aluminum exposed-edge material.

1. Basis-of-Design Product:

a. Schluter Systems L.P.; **Schiene AE60, Reno-U AEU125**

2. Manufacturers: Subject to compliance with requirements, available manufacturers offering products that may be incorporated into the Work include, but are not limited to, the following:

a. Blanke Corporation
b. Ceramic Tool Company, Inc.
c. Substitutions: Under provisions of Section 012500 “Substitution Procedures”.

C. Tile Cleaner: A neutral cleaner capable of removing soil and residue without harming tile and grout surfaces, specifically approved for materials and installations indicated by tile and grout manufacturers.

D. Grout Sealer: Manufacturer's standard product for sealing grout joints and that does not change color or appearance of grout.

1. Products: Subject to compliance with requirements, available products that may be incorporated into the Work include, but are not limited to, the following:

a. Bonsal American, an Oldcastle company; **Grout Sealer**
b. Custom Building Products; **Grout Sealer**
c. TEC, H. B. Fuller Construction Products Inc.; **Guard All Invisible Penetrating Sealer**
d. Substitutions: Under provisions of Section 012500 “Substitution Procedures”.

2.8 MIXING MORTARS AND GROUT

A. Mix mortars and grouts to comply with referenced standards and mortar and grout manufacturers' written instructions.

B. Add materials, water, and additives in accurate proportions.

C. Obtain and use type of mixing equipment, mixer speeds, mixing containers, mixing time, and other procedures to produce mortars and grouts of uniform quality with optimum performance characteristics for installations indicated.

PART 3 - EXECUTION

3.1 EXAMINATION

A. Examine substrates, areas, and conditions where tile will be installed, with Installer present, for compliance with requirements for installation tolerances and other conditions affecting performance of the Work.

1. Verify that substrates for setting tile are firm; dry; clean; free of coatings that are incompatible with tile-setting materials, including curing compounds and other substances that contain soap, wax, oil, or silicone; and comply with flatness tolerances required by ANSI A108.01 for installations indicated.
2. Verify that concrete substrates for tile floors installed with thinset mortar comply with surface finish requirements in ANSI A108.01 for installations indicated.

    a. Verify that surfaces that received a steel trowel finish have been mechanically scarified.
    b. Verify that protrusions, bumps, and ridges have been removed by sanding or grinding.

3. Verify that installation of grounds, anchors, recessed frames, electrical and mechanical units of work, and similar items located in or behind tile has been completed.
4. Verify that joints and cracks in tile substrates are coordinated with tile joint locations; if not coordinated, adjust joint locations in consultation with Architect.

B. Proceed with installation only after unsatisfactory conditions have been corrected.

3.2 PREPARATION

A. Fill cracks, holes, and depressions in concrete substrates for tile floors installed with thinset mortar with trowelable leveling and patching compound specifically recommended by tile-setting material manufacturer.

B. Blending: For tile exhibiting color variations, verify that tile has been factory blended and packaged so tile units taken from one package show same range of colors as those taken from other packages and match approved Samples. If not factory blended, either return to manufacturer or blend tiles at Project site before installing.

3.3 CERAMIC TILE INSTALLATION

A. Comply with TCNA's "Handbook for Ceramic, Glass, and Stone Tile Installation" for TCNA installation methods specified in tile installation schedules. Comply with parts of the ANSI A108 series "Specifications for Installation of Ceramic Tile" that are referenced in TCNA installation methods, specified in tile installation schedules, and apply to types of setting and grouting materials used.

B. Extend tile work into recesses and under or behind equipment and fixtures to form complete covering without interruptions unless otherwise indicated. Terminate work neatly at obstructions, edges, and corners without disrupting pattern or joint alignments.

C. Accurately form intersections and returns. Perform cutting and drilling of tile without marring visible surfaces. Carefully grind cut edges of tile abutting trim, finish, or built-in items for straight aligned joints. Fit tile closely to electrical outlets, piping, fixtures, and other penetrations so plates, collars, or covers overlap tile.

D. Provide manufacturer's standard trim shapes where necessary to eliminate exposed tile edges.

E. Jointing Pattern: Lay tile in grid pattern unless otherwise indicated. Lay out tile work and center tile fields in both directions in each space or on each wall area. Lay out tile work to minimize

the use of pieces that are less than half of a tile. Provide uniform joint widths unless otherwise indicated.

1. For tile mounted in sheets, make joints between tile sheets same width as joints within tile sheets so joints between sheets are not apparent in finished work.
2. Where adjoining tiles on floor, base, walls, or trim are specified or indicated to be same size, align joints.
3. Where tiles are specified or indicated to be whole integer multiples of adjoining tiles on floor, base, walls, or trim, align joints unless otherwise indicated.

F. Joint Widths: Unless otherwise indicated, install tile with the following joint widths:

1. Ceramic Mosaic Tile: 1/8 inch.
2. Quarry Tile: 3/8 inch.
3. Glazed Wall Tile: 1/16 inch.

G. Lay out tile wainscots to dimensions indicated or to next full tile beyond dimensions indicated.

H. Expansion Joints: Provide expansion joints and other sealant-filled joints, including control, contraction, and isolation joints, where indicated. Form joints during installation of setting materials, mortar beds, and tile. Do not saw-cut joints after installing tiles.

1. Where joints occur in concrete substrates, locate joints in tile surfaces directly above them.

I. Metal Edge Strips: Install where exposed edge of tile flooring meets carpet, wood, or other flooring that finishes flush with or below top of tile and no threshold is indicated.

J. Grout Sealer: Apply grout sealer to grout joints according to grout-sealer manufacturer's written instructions. As soon as grout sealer has penetrated grout joints, remove excess sealer and sealer from tile faces by wiping with soft cloth.

3.4 CRACK ISOLATION MEMBRANE INSTALLATION

A. Install crack isolation membrane to comply with ANSI A108.17 and manufacturer's written instructions to produce membrane of uniform thickness that is bonded securely to substrate.

B. Allow crack isolation membrane to cure before installing tile or setting materials over it.

3.5 ADJUSTING AND CLEANING

A. Remove and replace tile that is damaged or that does not match adjoining tile. Provide new matching units, installed as specified and in a manner to eliminate evidence of replacement.

B. Cleaning: On completion of placement and grouting, clean all ceramic tile surfaces so they are free of foreign matter.

1. Remove grout residue from tile as soon as possible.
2. Clean grout smears and haze from tile according to tile and grout manufacturer's written instructions but no sooner than ten (10) days after installation. Use only cleaners recommended by tile and grout manufacturers and only after determining that cleaners

are safe to use by testing on samples of tile and other surfaces to be cleaned. Protect metal surfaces and plumbing fixtures from effects of cleaning. Flush surfaces with clean water before and after cleaning.

3.6 PROTECTION

A. Protect installed tile work with Kraft paper or other heavy covering during construction period to prevent staining, damage, and wear. If recommended by tile manufacturer, apply coat of neutral protective cleaner to completed tile walls and floors.

B. Prohibit foot and wheel traffic from tiled floors for at least seven (7) days after grouting is completed.

C. Before final inspection, remove protective coverings and rinse neutral protective cleaner from tile surfaces.

3.7 INTERIOR CERAMIC TILE INSTALLATION SCHEDULE

A. Interior Floor Installations, Concrete Subfloor:

1. Ceramic Tile Installation: TCNA F113; thinset mortar.

   a. Ceramic Tile Type: (**PFT1**).
   b. Thinset Mortar: Latex-Portland cement mortar.
   c. Grout: Standard unsanded cement grout.

2. Ceramic Tile Installation: TCNA F113; thinset mortar.

   a. Ceramic Tile Type: (**QT1**).
   b. Thinset Mortar: Latex-Portland cement mortar.
   c. Grout: Standard sanded cement grout.

3. Ceramic Tile Installation: TCNA F125; thinset mortar on crack isolation membrane, where required.

   a. Ceramic Tile Type: (**PFT1**).
   b. Thinset Mortar: Latex-Portland cement mortar.
   c. Grout: Standard unsanded cement grout.

4. Ceramic Tile Installation: TCNA F125; thinset mortar on crack isolation membrane, where required.

   a. Ceramic Tile Type: (**QT1**).
   b. Thinset Mortar: Latex-Portland cement mortar.
   c. Grout: Standard sanded cement grout.

B. Interior Wall Installations, Masonry or Concrete:

1. Ceramic Tile Installation: TCNA W202; thinset mortar.

   a. Ceramic Tile Type: (**CWT1**, **CWT2**).
   b. Thinset Mortar: Latex-Portland cement mortar.

c. Grout: Standard unsanded cement grout.

END OF SECTION 093000

SECTION 095113 - ACOUSTICAL PANEL CEILINGS

PART 1 - GENERAL

1.1 RELATED DOCUMENTS

A. Drawings and general provisions of the Contract, including General and Supplementary Conditions and Division 01 Specification Sections, apply to this Section.

1.2 SUMMARY

A. Section includes acoustical panels and exposed suspension systems for ceilings.

B. Products furnished, but not installed under this Section, include anchors, clips, and other ceiling attachment devices to be cast in concrete.

1.3 ACTION SUBMITTALS

A. Product Data: For each type of product.

B. HPBS Submittals:

1. Product Data for Section 16a-38k-6(d)(9): For products having recycled content, documentation indicating percentages by weight of postconsumer and preconsumer recycled content. Include statement indicating costs for each product having recycled content.
2. Product Data for Section 16a-38k-5(d): For sealants, documentation including printed statement of VOC content.
3. Certificates for Section 16a-38k-6(d)(13): Chain-of-custody certificates indicating that paneling complies with forest certification and chain-of-custody requirements. Include statement indicating cost for each certified wood product.

C. Samples: For each exposed product and for each color and texture specified, 6 inches in size.

1.4 INFORMATIONAL SUBMITTALS

A. Coordination Drawings: Reflected ceiling plans, drawn to scale, on which the following items are shown and coordinated with each other, using input from installers of the items involved:

1. Suspended ceiling components.
2. Structural members to which suspension systems will be attached.
3. Size and location of initial access modules for acoustical panels.
4. Items penetrating finished ceiling including the following:

    a. Lighting fixtures.
    b. Air outlets and inlets.
    c. Speakers.
    d. Sprinklers.
    e. Access panels.

5. Perimeter moldings.

B. Product Test Reports: For each acoustical panel ceiling, for tests performed by a qualified testing agency.

C. Evaluation Reports: For each acoustical panel ceiling suspension system and anchor and fastener type, from ICC-ES.

1.5 CLOSEOUT SUBMITTALS

A. Maintenance Data: For finishes to include in maintenance manuals.

1.6 MAINTENANCE MATERIAL SUBMITTALS

A. Furnish extra materials that match products installed and that are packaged with protective covering for storage and identified with labels describing contents.

1. Acoustical Ceiling Panels: Full-size panels equal to two percent (2%) of each type of quantity installed.
2. Suspension-System Components: Quantity of each exposed component equal to two percent (2%) of quantity installed.

1.7 DELIVERY, STORAGE, AND HANDLING

A. Deliver acoustical panels, suspension-system components, and accessories to Project site in original, unopened packages and store them in a fully enclosed, conditioned space where they will be protected against damage from moisture, humidity, temperature extremes, direct sunlight, surface contamination, and other causes.

B. Before installing acoustical panels, permit them to reach room temperature and a stabilized moisture content.

C. Handle acoustical panels carefully to avoid chipping edges or damaging units in any way.

1.8 FIELD CONDITIONS

A. Environmental Limitations: Do not install acoustical panel ceilings until spaces are enclosed and weatherproof, wet work in spaces is complete and dry, work above ceilings is complete, and ambient temperature and humidity conditions are maintained at the levels indicated for Project when occupied for its intended use.

1. Pressurized Plenums: Operate ventilation system for not less than forty-eight (48) hours before beginning acoustical panel ceiling installation.

PART 2 - PRODUCTS

2.1 PERFORMANCE REQUIREMENTS

A. Seismic Performance: Acoustical ceiling shall withstand the effects of earthquake motions determined according to ASCE/SEI 7.

B. Surface-Burning Characteristics: Comply with ASTM E 84; testing by a qualified testing agency. Identify products with appropriate markings of applicable testing agency.

1. Flame-Spread Index: Comply with ASTM E 1264 for Class A materials.
2. Smoke-Developed Index: Fifty (50) or less.

C. Fire-Resistance Ratings: Comply with ASTM E 119; testing by a qualified testing agency. Identify products with appropriate markings of applicable testing agency.

1. Indicate design designations from UL's "Fire Resistance Directory" or from the listings of another qualified testing agency.

2.2 ACOUSTICAL PANELS, GENERAL

A. Source Limitations:

1. Acoustical Ceiling Panel: Obtain each type from single source from single manufacturer.
2. Suspension System: Obtain each type from single source from single manufacturer.

B. Recycled Content: Postconsumer recycled content plus one-half of preconsumer recycled content not less than twenty percent (20%).

C. Certified Wood: Wood and composite wood components of wood veneer panels shall be certified as "FSC Pure" or "FSC Mixed Credit" according to FSC STD-01-001, "FSC Principles and Criteria for Forest Stewardship," and FSC STD-40-004, "FSC Standard for Chain of Custody Certification."

D. Acoustical Panel Standard: Provide manufacturer's standard panels of configuration indicated that comply with ASTM E 1264 classifications as designated by types, patterns, acoustical ratings, and light reflectances unless otherwise indicated.

1. Mounting Method for Measuring NRC: Type E-400; plenum mounting in which face of test specimen is 15¾ inches away from test surface according to ASTM E 795.

E. Acoustical Panel Colors and Patterns: Match appearance characteristics indicated for each product type.

1. Where appearance characteristics of acoustical panels are indicated by referencing pattern designations in ASTM E 1264 and not manufacturers' proprietary product designations, provide products selected by Architect from each manufacturer's full range that comply with requirements indicated for type, pattern, color, light reflectance, acoustical performance, edge detail, and size.

2.3 ACOUSTICAL PANEL MANUFACTURERS

A. Manufacturers: Subject to compliance with requirements, available manufacturers offering products that may be incorporated into the Work include, but are not limited to, the following:

1. Armstrong World Industries, Inc.
2. CertainTeed Corp.
3. USG Interiors, Inc.; Subsidiary of USG Corporation.

4. Substitutions: Under provisions of Division 01 Section “Substitution Procedures”.

2.4 ACOUSTICAL PANELS

A. Basis-of-Design Product (**ACT1**):

1. Armstrong World Industries, Inc.; **School Zone Fine Fissured**
2. Classification: Provide panels complying with ASTM E 1264 for type, form, and pattern as follows:

   a. Type and Form: Type III, mineral base with painted finish; Form 2, water felted.
   b. Pattern: CE (perforated, small holes and lightly textured).

3. Color: White.
4. LR: Not less than 0.85.
5. NRC: Not less than 0.70.
6. CAC: Not less than 40.
7. Edge/Joint Detail: Angled Tegular.
8. Thickness: ¾ inch.
9. Modular Size: 24 by 24 inches.

B. Basis-of-Design Product (**ACT3**):

1. Armstrong World Industries, Inc.; **Clean Room VL Unperforated**
2. Classification: Provide panels complying with ASTM E 1264 for type, form, and pattern as follows:

   a. Type and Form: Type IV, mineral base with membrane-faced overlay; Form 2, water felted; with vinyl overlay on face, back, and sealed edges.
   b. Pattern: E (lightly textured).

3. Color: White.
4. LR: Not less than 0.80.
5. CAC: Not less than 40.
6. Edge/Joint Detail: Square.
7. Thickness: 5/8 inch.
8. Modular Size: 24 by 24 inches.

C. Broad Spectrum Antimicrobial Fungicide and Bactericide Treatment: Provide acoustical panels treated with manufacturer's standard antimicrobial formulation that inhibits fungus, mold, mildew, and gram-positive and gram-negative bacteria and showing no mold, mildew, or bacterial growth when tested according to ASTM D 3273 and evaluated according to ASTM D 3274 or ASTM G 21.

D. Basis-of-Design Product (**ACT4**):

1. Tectum Inc.; **Lay-In Ceiling Panel**
2. Classification: Provide panels complying with ASTM E 1264 for type, form, and pattern as follows:

a. Type and Form: Type XIV, excelsior bonded with inorganic binders (wood fiber base).
b. Pattern: L (random swirl).

3. Color: As selected by Architect and Owner from manufacturer's full range.
4. LR: Not less than 0.60.
5. NRC: Not less than 0.50.
6. Edge/Joint Detail: Square.
7. Thickness: 1½ inches.
8. Modular Size: 24 by 24 inches.

2.5 METAL SUSPENSION SYSTEMS, GENERAL

A. Recycled Content: Postconsumer recycled content plus one-half of preconsumer recycled content not less than twenty-five percent (25%).

B. Metal Suspension-System Standard: Provide manufacturer's standard direct-hung metal suspension systems of types, structural classifications, and finishes indicated that comply with applicable requirements in ASTM C 635.

1. High-Humidity Finish: Comply with ASTM C 635 requirements for "Coating Classification for Severe Environment Performance" where high-humidity finishes are indicated.

C. Attachment Devices: Size for five (5) times the design load indicated in ASTM C 635, Table 1, "Direct Hung," unless otherwise indicated. Comply with seismic design requirements.

D. Wire Hangers, Braces, and Ties: Provide wires complying with the following requirements:

1. Zinc-Coated, Carbon-Steel Wire: ASTM A 641, Class 1 zinc coating, soft temper.
2. Size: Select wire diameter so its stress at three (3) times hanger design load (ASTM C 635, Table 1, "Direct Hung") will be less than yield stress of wire, but provide not less than 0.106-inch-diameter wire.

E. Seismic Stabilizer Bars: Manufacturer's standard perimeter stabilizers designed to accommodate seismic forces.

F. Seismic Struts: Manufacturer's standard compression struts designed to accommodate seismic forces.

G. Seismic Clips: Manufacturer's standard seismic clips designed and spaced to secure acoustical panels in place.

H. Clean-Room Gasket System: Where indicated, provide manufacturer's standard system, including manufacturer's standard gasket and related adhesives, tapes, seals, and retention clips, designed to seal out foreign material from and maintain positive pressure in clean room.

2.6 METAL SUSPENSION SYSTEM

A. Manufacturers: Subject to compliance with requirements, available manufacturers offering products that may be incorporated into the Work include, but are not limited to, the following:

1. Armstrong World Industries, Inc.
2. CertainTeed Corp.
3. USG Interiors, Inc.; Subsidiary of USG Corporation.
4. Substitutions: Under provisions of Division 01 Section “Substitution Procedures”.

B. Wide-Face, Capped, Double-Web, Hot-Dip Galvanized, G60, Steel Suspension System: Main and cross runners roll formed from cold-rolled steel sheet; hot-dip galvanized according to ASTM A 653, G60 coating designation; with prefinished, cold-rolled, 15/16-inch-wide aluminum caps on flanges.

1. Basis-of-Design Product:

a. Armstrong World Industries, Inc.; **Prelude XL 15/16 Inch Exposed Tee System**

2. Structural Classification: Heavy-duty system.
3. Face Design: Flat, flush.
4. Face Finish: Painted white.

C. Wide-Face, Double-Web, Metal Suspension System: Main and cross runners formed from stainless steel to produce structural members with prefinished, 15/16 inch wide flanges.

1. Basis-of-Design Product:

a. Armstrong World Industries, Inc.; **SS Prelude Plus XL Environmental Tee System**

2. Structural Classification: Intermediate-duty system.
3. Face Design: Flat, flush.
4. Face Finish: Painted white.
5. Gasket System: Clean-room type.

2.7 METAL EDGE MOLDINGS AND TRIM

A. Recycled Content: Postconsumer recycled content plus one-half of preconsumer recycled content not less than thirty percent (30%) for moldings and fifty percent (50%) for trim.

B. Manufacturers: Subject to compliance with requirements, available manufacturers offering products that may be incorporated into the Work include, but are not limited to, the following:

1. Armstrong World Industries, Inc.
2. CertainTeed Corp.
3. USG Interiors, Inc.; Subsidiary of USG Corporation.
4. Substitutions: Under provisions of Division 01 Section “Substitution Procedures”.

C. Roll-Formed, Sheet-Metal Edge Moldings: Type and profile indicated or, if not indicated, manufacturer's standard moldings for edges and penetrations that comply with seismic design requirements; formed from sheet metal of same material, finish, and color as that used for exposed flanges of suspension-system runners.

1. Provide manufacturer's standard edge moldings that fit acoustical panel edge details and suspension systems indicated and that match width and configuration of exposed runners unless otherwise indicated.
2. For circular penetrations of ceiling, provide edge moldings fabricated to diameter required to fit penetration exactly.

D. Extruded-Aluminum Edge Trim (**TR1**): Where indicated, provide manufacturer's extruded-aluminum edge trim of profile indicated or referenced by manufacturer's designations, including splice plates, corner pieces, and attachment and other clips, complying with seismic design requirements and the following:

1. Basis-of-Design Product:

   a. Armstrong World Industries, Inc.; **Axiom – Knife Edge**

2. Aluminum Alloy: Alloy and temper recommended by aluminum producer and finisher for type of use and finish indicated, and with not less than the strength and durability properties of aluminum extrusions complying with ASTM B 221 for Alloy and Temper 6063-T5.
3. Baked-Enamel or Powder-Coat Finish: Minimum dry film thickness of 1.5 mils. Comply with ASTM C 635 and coating manufacturer's written instructions for cleaning, conversion coating, and applying and baking finish.

2.8 ACOUSTICAL SEALANT

A. Products: Subject to compliance with requirements, available products that may be incorporated into the Work include, but are not limited to, the following:

1. Acoustical Sealant for Exposed and Concealed Joints:

   a. Pecora Corporation; **AC-20 FTR Acoustical and Insulation Sealant**
   b. USG Corporation; **SHEETROCK Acoustical Sealant**
   c. Substitutions: Under provisions of Division 01 Section “Substitution Procedures”.

B. Acoustical Sealant: Manufacturer's standard sealant complying with ASTM C 834 and effective in reducing airborne sound transmission through perimeter joints and openings in building construction as demonstrated by testing representative assemblies according to ASTM E 90.

1. Exposed and Concealed Joints: Nonsag, paintable, nonstaining latex sealant.
2. Acoustical sealant shall have a VOC content of 250 g/L or less when calculated according to 40 CFR 59, Subpart D (EPA Method 24).

PART 3 - EXECUTION

3.1 EXAMINATION

A. Examine substrates, areas, and conditions, including structural framing to which acoustical panel ceilings attach or abut, with Installer present, for compliance with requirements specified in this and other Sections that affect ceiling installation and anchorage and with requirements

for installation tolerances and other conditions affecting performance of acoustical panel ceilings.

B. Examine acoustical panels before installation. Reject acoustical panels that are wet, moisture damaged, or mold damaged.

C. Proceed with installation only after unsatisfactory conditions have been corrected.

3.2 PREPARATION

A. Measure each ceiling area and establish layout of acoustical panels to balance border widths at opposite edges of each ceiling. Avoid using less-than-half-width panels at borders, and comply with layout shown on reflected ceiling plans.

3.3 INSTALLATION

A. General: Install acoustical panel ceilings to comply with ASTM C 636 and seismic design requirements indicated, according to manufacturer's written instructions and CISCA's "Ceiling Systems Handbook."

1. Fire-Rated Assembly: Install fire-rated ceiling systems according to tested fire-rated design.

B. Suspend ceiling hangers from building's structural members and as follows:

1. Install hangers plumb and free from contact with insulation or other objects within ceiling plenum that are not part of supporting structure or of ceiling suspension system.
2. Splay hangers only where required to miss obstructions; offset resulting horizontal forces by bracing, countersplaying, or other equally effective means.
3. Where width of ducts and other construction within ceiling plenum produces hanger spacings that interfere with location of hangers at spacings required to support standard suspension-system members, install supplemental suspension members and hangers in form of trapezes or equivalent devices.
4. Secure wire hangers to ceiling-suspension members and to supports above with a minimum of three (3) tight turns. Connect hangers directly either to structures or to inserts, eye screws, or other devices that are secure and appropriate for substrate and that will not deteriorate or otherwise fail due to age, corrosion, or elevated temperatures.
5. When steel framing does not permit installation of hanger wires at spacing required, install carrying channels or other supplemental support for attachment of hanger wires.
6. Do not attach hangers to steel roof deck. Attach hangers to structural members.
7. Space hangers not more than 48 inches o.c. along each member supported directly from hangers unless otherwise indicated; provide hangers not more than 8 inches from ends of each member.
8. Size supplemental suspension members and hangers to support ceiling loads within performance limits established by referenced standards and publications.

C. Secure bracing wires to ceiling suspension members and to supports with a minimum of four (4) tight turns. Suspend bracing from building's structural members as required for hangers, without attaching to permanent metal forms, steel deck, or steel deck tabs. Fasten bracing wires into concrete with cast-in-place or postinstalled anchors.

D. Install edge moldings and trim of type indicated at perimeter of acoustical ceiling area and where necessary to conceal edges of acoustical panels.

1. Apply acoustical sealant in a continuous ribbon concealed on back of vertical legs of moldings before they are installed.
2. Screw attach moldings to substrate at intervals not more than 16 inches o.c. and not more than 3 inches from ends, leveling with ceiling suspension system to a tolerance of 1/8 inch in 12 feet. Miter corners accurately and connect securely.
3. Do not use exposed fasteners, including pop rivets, on moldings and trim.

E. Install suspension-system runners so they are square and securely interlocked with one another. Remove and replace dented, bent, or kinked members.

F. Install acoustical panels with undamaged edges and fit accurately into suspension-system runners and edge moldings. Scribe and cut panels at borders and penetrations to provide a neat, precise fit.

1. For square-edged panels, install panels with edges fully hidden from view by flanges of suspension-system runners and moldings.
2. Paint cut edges of panel remaining exposed after installation; match color of exposed panel surfaces using coating recommended in writing for this purpose by acoustical panel manufacturer.
3. Install clean-room gasket system in areas indicated, sealing each panel and fixture as recommended by panel manufacturer's written instructions.
4. Protect lighting fixtures and air ducts to comply with requirements indicated for fire-resistance-rated assembly.

3.4 CLEANING

A. Clean exposed surfaces of acoustical panel ceilings, including trim, edge moldings, and suspension-system members. Comply with manufacturer's written instructions for cleaning and touchup of minor finish damage. Remove and replace ceiling components that cannot be successfully cleaned and repaired to permanently eliminate evidence of damage.

END OF SECTION 095113

SECTION 095133 - ACOUSTICAL METAL PAN CEILINGS

PART 1 - GENERAL

1.1 RELATED DOCUMENTS

A. Drawings and general provisions of the Contract, including General and Supplementary Conditions and Division 01 Specification Sections, apply to this Section.

1.2 SUMMARY

A. Section includes acoustical metal pans and associated suspension system for interior ceilings.

B. Related Requirements:

1. Section 095113 "Acoustical Panel Ceilings" for ceilings consisting of mineral-base and glass-fiber-base acoustical panels and exposed suspension systems.
2. Section 095423 "Linear Metal Ceilings."

1.3 ACTION SUBMITTALS

A. Product Data: For each type of product.

B. HPBS Submittals:

1. Product Data for Section 16a-38k-6(d)(9): For products having recycled content, documentation indicating percentages by weight of postconsumer and preconsumer recycled content. Include statement indicating cost for each product having recycled content.
2. Product Data for Section 16a-38k-5(d): For sealants and adhesives, documentation including printed statement of VOC content.

C. Samples: For each exposed product and for each color and texture specified, 6 inches in size.

1.4 INFORMATIONAL SUBMITTALS

A. Coordination Drawings: Reflected ceiling plans, drawn to scale, on which the following items are shown and coordinated with each other, using input from installers of the items involved:

1. Suspended ceiling components.
2. Structural members to which suspension systems will be attached.
3. Size and location of access modules for acoustical panels.
4. Items penetrating finished ceiling including the following:

    a. Lighting fixtures.
    b. Air outlets and inlets.
    c. Speakers.
    d. Sprinklers.
    e. Access panels.

5. Perimeter moldings.

B. Qualification Data: For testing agency.

C. Product Test Reports: For each acoustical metal pan ceiling, for tests performed by a qualified testing agency.

D. Evaluation Reports: For each acoustical metal pan ceiling suspension system and anchor and fastener type.

E. Field quality-control reports.

1.5 CLOSEOUT SUBMITTALS

A. Maintenance Data: For finishes to include in maintenance manuals.

1.6 MAINTENANCE MATERIAL SUBMITTALS

A. Furnish extra materials that match products installed and that are packaged with protective covering for storage and identified with labels describing contents.

1. Acoustical Metal Pans: Full-size units equal to two percent (2%) of quantity installed.
2. Suspension-System Components: Quantity of each grid, exposed molding, and trim equal to two percent (2%) of quantity installed.

1.7 QUALITY ASSURANCE

A. Testing Agency Qualifications: Qualified according to NVLAP for testing indicated.

1.8 DELIVERY, STORAGE, AND HANDLING

A. Deliver acoustical metal pans, suspension-system components, and accessories to Project site in original, unopened packages and store them in a fully enclosed, conditioned space where they are protected against damage from moisture, humidity, temperature extremes, direct sunlight, surface contamination, and other causes.

B. Handle acoustical metal pans, suspension-system components, and accessories carefully to avoid damaging units and finishes in any way.

PART 2 - PRODUCTS

2.1 PERFORMANCE REQUIREMENTS

A. Surface-Burning Characteristics: Comply with ASTM E 84; testing by a qualified testing agency. Identify products with appropriate markings of applicable testing agency.

1. Flame-Spread Index: Comply with ASTM E 1264 for Class A materials.
2. Smoke-Developed Index: 50 or less.

2.2 ACOUSTICAL METAL PANS, GENERAL

A. Recycled Content: Postconsumer recycled content plus one-half of preconsumer recycled content not less than ninety percent (90%) for metal pans.

B. Acoustical Panel Standard: Provide manufacturer's standard pans of configuration indicated that comply with ASTM E 1264 classifications as designated by types, patterns, acoustical ratings, and light reflectances unless otherwise indicated.

1. Mounting Method for Measuring NRC: Type E-400; plenum mounting in which face of test specimen is 15¾ inches away from test surface according to ASTM E 795.

C. Sheet Metal Characteristics: For metal components exposed to view in the completed Work, provide materials with smooth, flat surfaces without blemishes. Do not use materials with exposed pitting, seam marks, roller marks, roughness, stains, or discolorations.

1. Aluminum Sheet: Rolled aluminum sheet, complying with ASTM B 209; alloy and temper recommended by aluminum producer and finisher for type of use and finish indicated.

2.3 ALUMINUM PANS FOR ACOUSTICAL METAL PAN CEILING (**ACT2**)

A. Basis-of-Design Product:

1. USG Interiors, Inc.; **Geometrix 2¼" Wedge**

B. Manufacturers: Subject to compliance with requirements, available manufacturers offering products that may be incorporated into the Work include, but are not limited to, the following:

1. Armstrong World Industries, Inc.
2. Chicago Metallic Corporation
3. Hunter Douglas Architectural Products, Inc.
4. Substitutions: Under provisions of Section 012500 "Substitution Procedures".

C. Classification: Units complying with ASTM E 1264 for Type XX, other types described as unperforated aluminum facing (pan) units.

D. Pan Fabrication: Manufacturer's standard units of size, profile, and edge treatment indicated, formed from metal indicated and finished to comply with requirements indicated.

1. Lay-in Pans: Formed to set in exposed suspension grid.

E. Pan Thickness: Not less than 0.02019 inch.

F. Pan Edge Detail: Square.

G. Pan Size: 24 by 24 inches.

H. Pan Face Finish: Painted in color selected from manufacturer's full range.

2.4 METAL SUSPENSION SYSTEMS, GENERAL

A. Recycled Content of Metal Suspension System: Postconsumer recycled content plus one-half of preconsumer recycled content not less than sixty-five percent (65%).

B. Metal Suspension System Standard: Provide manufacturer's standard metal suspension systems of types, structural classifications, and finishes indicated that comply with applicable ASTM C 635 requirements.

C. Suspension Systems: Provide systems complete with carriers, runners, splice sections, connector clips, alignment clips, leveling clips, hangers, molding, trim, retention clips, load-resisting struts, and other suspension components required to support ceiling units and other ceiling-supported construction.

D. Attachment Devices: Size for five (5) times the design load indicated in ASTM C 635, Table 1, Direct Hung, unless otherwise indicated. Comply with seismic design requirements.

E. Wire Hangers, Braces, and Ties: Provide wires complying with the following requirements:

1. Zinc-Coated, Carbon-Steel Wire: ASTM A 641, Class 1 zinc coating, soft temper.
2. Size: Select wire diameter so its stress at three (3) times the hanger design load indicated in ASTM C 635, Table 1, Direct Hung, is less than yield stress of wire, but provide not less than 0.106-inch-diameter wire.

F. Seismic Stabilizer Bars: Manufacturer's standard perimeter stabilizers designed to accommodate seismic forces.

G. Seismic Struts: Manufacturer's standard compression struts designed to accommodate seismic forces.

H. Seismic Clips: Manufacturer's standard seismic clips designed and spaced to secure acoustical metal pans in place.

I. Exposed Metal Edge Moldings and Trim: Provide exposed members as indicated or as required to comply with seismic requirements of authorities having jurisdiction, to conceal edges of and penetrations through ceiling, to conceal edges of pans and runners, for fixture trim and adapters, for fasciae at changes in ceiling height, and for other conditions; of metal and finish matching acoustical metal pan ceiling units unless otherwise indicated.

1. For Circular Penetrations of Ceiling: Fabricate edge moldings to diameter required to fit penetration exactly.

2.5 DIRECT-HUNG, STANDARD-GRID, METAL SUSPENSION SYSTEM FOR ACOUSTICAL METAL PAN CEILING

A. Basis-of-Design Product:

1. USG Interiors, Inc.; **DONN DX/DXL**

B. Manufacturers: Subject to compliance with requirements, available manufacturers offering products that may be incorporated into the Work include, but are not limited to, the following:

1. Armstrong World Industries, Inc.
2. Chicago Metallic Corporation
3. USG Interiors, Inc.; Subsidiary of USG Corporation
4. Substitutions: Under provisions of Section 012500 “Substitution Procedures”.

C. Suspension System: For lay-in pans.

D. Wide-Face, Capped, Double-Web, Steel Suspension System: Main and cross runners roll formed from cold-rolled steel sheet, hot-dip galvanized according to ASTM A 653, G60 coating designation, with prefinished, cold-rolled, 15/16-inch-wide aluminum caps on flanges.

1. Structural Classification: Heavy-duty system.
2. Face Design: Flat, flush.
3. Face Finish: Painted white.

2.6 ACOUSTICAL SEALANT

A. Products: Subject to compliance with requirements, available products that may be incorporated into the Work include, but are not limited to, the following:

1. Acoustical Sealant for Exposed and Concealed Joints:

a. Pecora Corporation; **AC-20 FTR Acoustical and Insulation Sealant**
b. USG Corporation; **SHEETROCK Acoustical Sealant**
c. Substitutions: Under provisions of Section 012500 “Substitution Procedures”.

B. Acoustical Sealant: Manufacturer's standard sealant complying with ASTM C 834 and effective in reducing airborne sound transmission through perimeter joints and openings in building construction as demonstrated by testing representative assemblies according to ASTM E 90.

1. Exposed and Concealed Joints: Nonsag, paintable, nonstaining latex sealant.
2. Acoustical sealant shall have a VOC content of 250 g/L or less.

2.7 GENERAL FINISH REQUIREMENTS

A. Protect mechanical finishes on exposed surfaces from damage by applying a strippable, temporary protective covering before shipping.

B. Appearance of Finished Work: Noticeable variations in same piece are not acceptable. Variations in appearance of adjoining components are acceptable if they are within the range of approved Samples and are assembled or installed to minimize contrast.

2.8 ALUMINUM FINISHES

A. Color-Coated Finish: Manufacturer's standard baked paint complying with coating manufacturer's written instructions for surface preparation, pretreatment, application, baking, and minimum dry film thickness.

PART 3 - EXECUTION

3.1 EXAMINATION

A. Examine substrates, areas, and conditions, including structural framing to which acoustical metal pan ceilings attach or abut, with Installer present, for compliance with requirements specified in this and other Sections that affect ceiling installation and anchorage and with requirements for installation tolerances and other conditions affecting performance of acoustical metal pan ceilings.

B. Proceed with installation only after unsatisfactory conditions have been corrected.

3.2 PREPARATION

A. Measure each ceiling area and establish layout of acoustical metal pans to balance border widths at opposite edges of each ceiling. Avoid using less-than-half-width pans at borders, and comply with layout shown on reflected ceiling plans and coordination drawings.

3.3 INSTALLATION

A. General: Install acoustical metal pan ceilings to comply with ASTM C 636 and seismic design requirements indicated, according to manufacturer's written instructions and CISCA's "Ceiling Systems Handbook."

B. Suspend ceiling hangers from building's structural members and as follows:

1. Install hangers plumb and free from contact with insulation or other objects within ceiling plenum that are not part of supporting structure or of ceiling suspension system.
2. Splay hangers only where required to miss obstructions; offset resulting horizontal forces by bracing, countersplaying, or other equally effective means.
3. Where width of ducts and other construction within ceiling plenum produces hanger spacings that interfere with location of hangers at spacings required to support standard suspension-system members, install supplemental suspension members and hangers in form of trapezes or equivalent devices.
4. Secure wire hangers to ceiling suspension members and to supports above with a minimum of three (3) tight turns. Connect hangers directly either to structures or to inserts, eye screws, or other devices that are secure and appropriate for substrate and that do not deteriorate or otherwise fail due to age, corrosion, or elevated temperatures.
5. Do not support ceilings directly from permanent metal forms or floor deck. Fasten hangers to cast-in-place hanger inserts, postinstalled mechanical or adhesive anchors, or power-actuated fasteners that extend through forms into concrete.
6. When steel framing does not permit installation of hanger wires at spacing required, install carrying channels or other supplemental support for attachment of hanger wires.
7. Do not attach hangers to steel deck tabs.
8. Do not attach hangers to steel roof deck. Attach hangers to structural members.
9. Space hangers not more than 48 inches o.c. along each member supported directly from hangers unless otherwise indicated; provide hangers not more than 8 inches from ends of each member.
10. Size supplemental suspension members and hangers to support ceiling loads within performance limits established by referenced standards and publications.

C. Install edge moldings and trim of type indicated at perimeter of acoustical ceiling area and where necessary to conceal edges of acoustical metal pans.

1. Apply acoustical sealant in a continuous ribbon concealed on back of vertical legs of moldings before they are installed.
2. Screw attach moldings to substrate at intervals not more than 16 inches o.c. and not more than 3 inches from ends, leveling with ceiling suspension system to a tolerance of 1/8 inch in 12 feet. Miter corners accurately and connect securely.
3. Do not use exposed fasteners, including pop rivets, on moldings and trim.

D. Install suspension-system runners so they are square and securely interlocked with one another. Remove and replace dented, bent, or kinked members.

E. Cut acoustical metal pan units for accurate fit at borders and at interruptions and penetrations by other work through ceilings. Stiffen edges of cut units as required to eliminate evidence of buckling or variations in flatness exceeding referenced standards for stretcher-leveled metal sheet.

F. Install acoustical metal pans in coordination with suspension system and exposed moldings and trim. Comply with installation tolerances according to CISCA's "Metal Ceilings Technical Guidelines."

1. For lay-in, square-edge pans, install pans with edges fully hidden from view by flanges of suspension-system runners and moldings.
2. Align joints in adjacent courses to form uniform, straight joints parallel to room axis in both directions unless otherwise indicated.
3. Fit adjoining units to form flush, tight joints.

3.4 FIELD QUALITY CONTROL

A. Testing Agency: Engage a qualified testing agency to perform tests and inspections.

B. Acoustical metal panel ceiling hangers, anchors, and fasteners will be considered defective if they do not pass tests and inspections.

C. Prepare test and inspection reports.

3.5 CLEANING

A. Clean exposed surfaces of acoustical metal pan ceilings, including trim and edge moldings, after removing strippable, temporary protective covering, if any. Comply with manufacturer's written instructions for stripping of temporary protective covering, cleaning, and touchup of minor finish damage. Remove and replace ceiling components that cannot be successfully cleaned and repaired to permanently eliminate evidence of damage, including dented and bent units.

END OF SECTION 095133

SECTION 095423 - LINEAR METAL CEILINGS

PART 1 - GENERAL

1.1 RELATED DOCUMENTS

A. Drawings and general provisions of the Contract, including General and Supplementary Conditions and Division 01 Specification Sections, apply to this Section.

1.2 SUMMARY

A. Section includes strip, linear metal pans and suspension systems for ceilings.

B. Related Requirements:

1. Section 095133 "Acoustical Metal Pan Ceilings" for clip-in, lay-in, snap-in, and torsion-spring-hinged metal pan ceilings with exposed suspension systems.

1.3 DEFINITIONS

A. LR: Light Reflectance coefficient.

B. NRC: Noise Reduction Coefficient.

1.4 COORDINATION

A. Coordinate layout and installation of linear metal pans and suspension system with other construction that penetrates ceilings or is supported by them, including light fixtures, HVAC equipment, fire-suppression system, and partition assemblies.

1.5 ACTION SUBMITTALS

A. Product Data: For each type of product.

B. HPBS Submittals:

1. Product Data for Section 16a-38k-6(d)(9): For products having recycled content, documentation indicating percentages by weight of postconsumer and preconsumer recycled content. Include statement indicating cost for each product having recycled content.

C. Samples for Initial Selection: For components with factory-applied color and other decorative finishes.

D. Samples for Verification: For each component indicated and for each exposed finish required, prepared on Samples of size indicated below:

1. Linear Metal Pan: Set of 12-inch-long Samples of each type and color and a 12-inch-long spliced section.
2. Suspension System Members: 12-inch-long Sample of each type.

3. Exposed Molding and Trim: Set of 12-inch-long Samples of each type, finish, and color.
4. Filler Strips: Set of 12-inch-long Samples of each type, finish, and color.
5. End Cap: Full size.

1.6 INFORMATIONAL SUBMITTALS

A. Coordination Drawings: Reflected ceiling plans, drawn to scale, on which the following items are shown and coordinated with each other, using input from installers of the items involved:

1. Linear pattern.
2. Joint pattern.
3. Ceiling suspension members.
4. Method of attaching hangers to building structure.
5. Ceiling-mounted items including light fixtures, diffusers, grilles, speakers, sprinklers, and access panels.
6. Ceiling perimeter and penetrations through ceiling; trim and moldings.
7. Minimum Drawing Scale: 1/8 inch = 1 foot.

B. Evaluation Reports: For linear metal ceiling and components.

1.7 CLOSEOUT SUBMITTALS

A. Maintenance Data: For finishes to include in maintenance manuals.

1.8 MAINTENANCE MATERIAL SUBMITTALS

A. Furnish extra materials that match products installed and that are packaged with protective covering for storage and identified with labels describing contents.

1. Linear Metal Ceiling Components: Quantity of each pan, carrier, accessory, and exposed molding and trim equal to two percent (2%) of quantity installed.

1.9 DELIVERY, STORAGE, AND HANDLING

A. Deliver linear metal pans, suspension system components, and accessories to Project site in original, unopened packages and store them in a fully enclosed, conditioned space where they are protected against damage from moisture, humidity, temperature extremes, direct sunlight, surface contamination, and other causes.

B. Handle linear metal pans, suspension system components, and accessories carefully to avoid damaging units and finishes in any way.

1.10 PROJECT CONDITIONS

A. Environmental Limitations: Do not install linear metal ceilings until spaces are enclosed and weathertight, wet work in spaces is complete and dry, work above ceilings is complete, and ambient temperature and humidity conditions are maintained at the levels indicated for Project when occupied for its intended use.

PART 2 - PRODUCTS

2.1 PERFORMANCE REQUIREMENTS

A. Recycled Content of Products: Postconsumer recycled content plus one-half of preconsumer recycled content not less than seventy percent (70%).

B. Surface-Burning Characteristics: Comply with ASTM E 84; testing by a qualified testing agency. Identify products with appropriate markings of applicable testing agency.

1. Flame-Spread Index: Comply with ASTM E 1264 for Class A materials.
2. Smoke-Developed Index: 50 or less.

2.2 LINEAR METAL CEILING PANS

A. Acoustical Metal Pan Standard: Provide manufacturer's standard linear metal pans of configuration indicated that comply with ASTM E 1264 classifications as designated by types, acoustical ratings, and light reflectances unless otherwise indicated.

1. Mounting Method for Measuring NRC: Type E-400; plenum mounting in which face of test specimen is 15¾ inches away from test surface per ASTM E 795.

B. Sheet Metal Characteristics: For metal components exposed to view in the completed Work, provide materials with smooth, flat surfaces without blemishes. Do not use materials with exposed pitting, seam marks, roller marks, roughness, stains, or discolorations.

1. Aluminum Sheet: Roll-formed aluminum sheet, complying with ASTM B 209; alloy and temper recommended by aluminum producer and finisher for type of use and finish indicated.

C. Pan Fabrication: Manufacturer's standard units of size, profile, and edge treatment indicated, formed from metal indicated to snap on and be securely retained on carriers without separate fasteners, and finished to comply with requirements indicated.

D. Pan Splices: Construction same as pans, in lengths 8 to 12 inches; with manufacturer's standard finish.

E. End Caps: Metal matching pans; fabricated to fit and conceal exposed ends of pans.

F. Filler Strips: Metal matching pans; fabricated to uninterruptedly close voids between pans.

G. Moldings and Trim: Provide manufacturer's standard moldings and trim for exposed members, and as indicated or required, for edges and penetrations of ceiling, around fixtures, at changes in ceiling height, and for other conditions; of same metal and finish as linear metal ceiling pans.

2.3 METAL SUSPENSION SYSTEMS

A. Metal Suspension Systems Standard: Provide ceiling manufacturer's standard metal suspension systems of types and finishes indicated that comply with applicable ASTM C 635 requirements.

B. Suspension Systems: Provide systems complete with carriers, splice sections, connector clips, alignment clips, leveling clips, hangers, molding, trim, retention clips, load-resisting struts,

fixture adapters, and other suspension components required to support ceiling units and other ceiling-supported construction.

C. Attachment Devices: Size for five (5) times the design load indicated in ASTM C 635, Table 1, Direct Hung, unless otherwise indicated.

D. Wire Hangers, Braces, and Ties: Provide wire complying with the following requirements:

1. Zinc-Coated, Carbon-Steel Wire: ASTM A 641, Class 1 zinc coating, soft temper.
2. Size: Select wire diameter so its stress at 3 times the hanger design load indicated in ASTM C 635, Table 1, Direct Hung is less than yield stress of wire, but provide not less than 0.106-inch-diameter wire.

E. Carriers: Factory finished with matte-black baked finish.

1. Main Carriers: Aluminum, not less than 0.240-inch rolled sheet, alloy and temper recommended by aluminum producer and finisher for type of use and finish indicated, complying with ASTM B 209.

F. Carrier Splices: Same metal, profile, and finish as for carriers.

G. Stabilizer Channels, Tees, and Bars: Manufacturer's standard components for stabilizing main carriers at regular intervals and at light fixtures, air-distribution equipment, access doors, and other equipment; spaced as standard with manufacturer for use indicated; and factory finished with matte-black baked finish.

H. Seismic Struts: Manufacturer's standard compression struts designed to accommodate seismic forces.

I. Edge Moldings and Trim: Provide exposed members as indicated or required to comply with seismic requirements of authorities having jurisdiction, to conceal edges of penetrations through ceiling, to conceal ends of pans and carriers, for fixture trim and adapters, for fasciae at changes in ceiling height, and for other conditions; of metal and finish matching linear metal pans or extruded plastic unless otherwise indicated.

1. For Circular Penetrations of Ceiling: Fabricate edge moldings to diameter required to fit penetration exactly.

2.4 ALUMINUM PANS AND SUSPENSION SYSTEM FOR LINEAR METAL CEILING (**ACT6)**

A. Aluminum Pans and Suspension System:

1. Basis-of-Design Product:

a. Hunter Douglas Architectural Products, Inc.; **Luxalon MULTI-BOX**

2. Manufacturers: Subject to compliance with requirements, available manufacturers offering products that may be incorporated into the Work include, but are not limited to, the following:

a. Chicago Metallic Corporation

b. Simplex Ceilings; Armstrong World Industries, Inc.
c. USG Interiors, Inc.
d. Substitutions: Under provisions of Section 012500 “Substitution Procedures”.

B. Classification: Units complying with ASTM E 1264 for Type XX, other types described as unperforated aluminum strips.

C. Pan Thickness: Not less than 0.025 inch.

D. Pan Edge Detail: Square.

E. Linear Module Width and Pan Face Width: 2-inch module width and 1¼-inch face width, 4-inch module width and 3¼-inch face width, 6-inch module width and 5¼-inch face width and 8-inch module width and 7¼-inch face width as indicated on Drawings.

F. Pan Depth: 5/8 inch deep.

G. Pan Face Finish: Painted in color selected from manufacturer's full range.

H. End Cap, Finish of Exposed Portions: To match pan.

I. Filler Strip Design: Recessed.

J. Filler Strip, Finish of Exposed Portions: Black.

K. LR: Not less than 0.75.

L. Suspension-System Main-Carrier Material: Aluminum.

2.5 ACCESSORIES

A. Access Panels: For access at locations indicated, provide door hinge assembly, retainer clip, and retainer bar, assembled with ceiling panels and carrier sections into access doors of required size, permitting upward or downward opening.

2.6 GENERAL FINISH REQUIREMENTS

A. Protect mechanical finishes on exposed surfaces from damage by applying a strippable, temporary protective covering before shipping.

B. Appearance of Finished Work: Noticeable variations in same piece are not acceptable. Variations in appearance of adjoining components are acceptable if they are within the range of approved Samples and are assembled or installed to minimize contrast.

2.7 ALUMINUM FINISHES

A. Color-Coated Finish: Manufacturer's standard baked paint finish complying with coating manufacturer's written instructions for surface preparation, pretreatment, application, baking, and minimum dry film thickness.

PART 3 - EXECUTION

3.1 EXAMINATION

A. Examine substrates, areas, and conditions, including structural framing and substrates to which linear metal ceilings attach or abut, with Installer present, for compliance with requirements specified in this and other Sections that affect ceiling installation and anchorage and with requirements for installation tolerances and other conditions affecting performance of linear metal ceilings.

B. Proceed with installation only after unsatisfactory conditions have been corrected.

3.2 PREPARATION

A. Measure each ceiling area and establish layout of linear metal pans to balance border widths at opposite edges of each ceiling. Avoid using less-than-half-width pans at borders, and comply with layout shown on reflected ceiling plans and on Coordination Drawings.

3.3 INSTALLATION

A. Comply with ASTM C 636 and seismic requirement indicated, per manufacturer's written instructions and CISCA's "Ceiling Systems Handbook."

B. Suspend ceiling hangers from building's structural members and as follows:

1. Install hangers plumb and free from contact with insulation or other objects within ceiling plenum that are not part of supporting structure or of ceiling suspension system.
2. Splay hangers only where required to miss obstructions; offset resulting horizontal forces by bracing, countersplaying, or other equally effective means.
3. Where width of ducts and other construction within ceiling plenum produces hanger spacings that interfere with location of hangers at spacings required to support standard suspension system members, install supplemental suspension members and hangers in form of trapezes or equivalent devices.
4. Secure wire hangers to ceiling suspension members and to supports above with a minimum of three (3) tight turns. Connect hangers directly either to structures or to inserts, eye screws, or other devices that are secure and appropriate for substrate to which hangers are attached and for type of hanger involved.
5. Do not support ceilings directly from permanent metal forms or floor deck. Fasten hangers to cast-in-place hanger inserts, postinstalled mechanical or adhesive anchors, or power-actuated fasteners that extend through forms into concrete.
6. When steel framing does not permit installation of hanger wires at spacing required, install carrying channels or other supplemental support for attachment of hanger wires.
7. Do not attach hangers to steel deck tabs.
8. Do not attach hangers to steel roof deck. Attach hangers to structural members.
9. Space hangers not more than 48 inches o.c. along each member supported directly from hangers unless otherwise indicated; provide hangers not more than 8 inches from ends of each member.
10. Size supplemental suspension members and hangers to support ceiling loads within performance limits established by referenced standards and publications.

C. Install edge moldings and trim of type indicated at perimeter of linear metal ceiling area and where necessary to conceal edges and ends of linear metal pans.

1. Screw attach moldings to substrate at intervals not more than 16 inches o.c. and not more than 3 inches from ends, leveling with ceiling suspension system to a tolerance of 1/8 inch in 12 feet. Miter corners accurately and connect securely.
2. Do not use exposed fasteners, including pop rivets, on moldings and trim.

D. Install suspension system carriers so they are aligned and securely interlocked with one another. Remove and replace dented, bent, or kinked members.

E. Cut linear metal pans for accurate fit at borders and at interruptions and penetrations by other work through ceilings. Stiffen edges of cut units as required to eliminate evidence of buckling or variations in flatness exceeding referenced standards for stretcher-leveled metal sheet.

F. Install linear metal pans in coordination with suspension system and exposed moldings and trim.

1. Align joints in adjacent courses to form uniform, straight joints parallel to room axis in both directions unless otherwise indicated.
2. Fit adjoining units to form flush, tight joints. Scribe and cut units for accurate fit at borders and around construction penetrating ceiling.
3. Install pans with butt joints using internal pan splices and in the following joint configuration:

   a. Random.

4. Install directionally textured metal pans in directions indicated.
5. Where metal pan ends are visible, install end caps unless trim is indicated.
6. Install filler strips where indicated.

3.4 CLEANING

A. Clean exposed surfaces of linear metal ceilings, including trim and edge moldings after removing strippable, temporary protective covering if any. Comply with manufacturer's written instructions for stripping of temporary protective covering, cleaning, and touchup of minor finish damage. Remove and replace ceiling components that cannot be successfully cleaned and repaired to permanently eliminate evidence of damage, including dented and bent units.

END OF SECTION 095423

SECTION 096400 - WOOD FLOORING

PART 1 - GENERAL

1.1 RELATED DOCUMENTS

A. Drawings and general provisions of the Contract, including General and Supplementary Conditions and Division 01 Specification Sections, apply to this Section.

1.2 SUMMARY

A. Section Includes:

1. Field-finished wood flooring.

B. Related Sections:

1. Division 09 Section "Wood Athletic Flooring" for resilient systems used in sports-activity areas.

1.3 ACTION SUBMITTALS

A. Product Data: For each type of product indicated.

B. HPBS Submittals:

1. Product Data for Section 16a-38k-6(d)(8): For recycled-rubber underlayment, documentation indicating percentages by weight of postconsumer and preconsumer recycled content. Include statement indicating cost for each product having recycled content.
2. Product Data for Section 16a-38k-5(d): For wood flooring installation adhesives, documentation including printed statement of VOC content.
3. Product Data for Section 16a-38k-5(d): For field-applied finishes for wood flooring, documentation including printed statement of VOC content.

C. Shop Drawings: For each type of floor assembly and accessory. Include plans, elevations, sections, details, and attachments to other work. Include expansion provisions and trim details.

D. Samples: For each type of wood flooring and accessory, with stain color and finish required, approximately 12 inches long and of same thickness and material indicated for the Work and showing the full range of normal color and texture variations expected.

1.4 MAINTENANCE MATERIAL SUBMITTALS

A. Furnish extra materials described below, before installation begins, that match products installed and that are packaged with protective covering for storage and identified with labels describing contents.

1. Wood Flooring: Equal to one percent (1%) of amount installed for each type of wood flooring indicated.

1.5 QUALITY ASSURANCE

A. Maple Flooring: Comply with applicable MFMA grading rules for species, grade, and cut.

1. Certification: Provide flooring that carries MFMA mark on each bundle or piece.

B. Build mockup of typical flooring area as shown on Drawings.

1. To set quality standards for sanding and application of field finishes, prepare finish mockup of floor area as shown on Drawings.
2. Approval of mockups does not constitute approval of deviations from the Contract Documents contained in mockups unless Architect specifically approves such deviations in writing.

1.6 DELIVERY, STORAGE, AND HANDLING

A. Deliver wood flooring materials in unopened cartons or bundles.

B. Protect wood flooring from exposure to moisture. Do not deliver wood flooring until after concrete, masonry, plaster, ceramic tile, and similar wet work is complete and dry.

C. Store wood flooring materials in a dry, warm, ventilated, weathertight location.

1.7 PROJECT CONDITIONS

A. Conditioning period begins not less than seven (7) days before wood flooring installation, is continuous through installation, and continues not less than seven (7) days after wood flooring installation.

1. Environmental Conditioning: Maintain an ambient temperature between 65 and 75 deg F (18 and 24 deg C) and relative humidity planned for building occupants in spaces to receive wood flooring during the conditioning period.
2. Wood Flooring Conditioning: Move wood flooring into spaces where it will be installed, no later than the beginning of the conditioning period.

a. Do not install flooring until it adjusts to relative humidity of, and is at same temperature as, space where it is to be installed.
b. Open sealed packages to allow wood flooring to acclimatize immediately on moving flooring into spaces in which it will be installed.

B. After conditioning period, maintain relative humidity and ambient temperature planned for building occupants.

1.8 GUARANTEE

A. Guarantee shall not cover damage caused in whole or in part by casualty, ordinary wear and tear, abuse, use for which material is not designed, faulty construction of the building, settlement of the building walls, failure of the other contractors to adhere to specifications, or excessive moisture from humidity, spillage, migration through the slab or wall, or any other source.

B. Provide manufacturer’s warranty against defects in material for a period of one (1) year.

PART 2 - PRODUCTS

2.1 FIELD-FINISHED WOOD FLOORING (**WDF1**)

A. Solid-Wood Flooring: Kiln dried to six to nine percent (6-9%) maximum moisture content, tongue and groove and end matched, and with backs channeled.

1. Species and Grade: MFMA-RL Second and Better Grade hard maple.
2. Cut: Edge grain.
3. Thickness: 25/32 inch.
4. Face Width: 2¼ inches.
5. Lengths: Random-length strips complying with applicable grading rules.

B. Urethane Finish System: Complete water-based system of compatible components that is recommended by finish manufacturer for application indicated.

1. Manufacturers: Subject to compliance with requirements, available manufacturers offering products that may be incorporated into the Work include, but are not limited to, the following:

a. Hillyard, Inc.
b. Basic Coatings, Inc.
c. Dura Seal, Sherwin-Williams Company (The).
d. Substitutions: Under provisions of Division 01 Section “Substitution Procedures”.

2. VOC Content: When calculated according to 40 CFR 59, Subpart D (EPA Method 24), as follows:

a. Finish Coats and Floor Sealers: Not more than 350 g/L.
b. Stains: Not more than 250 g/L.

3. Stain: Penetrating and non-fading type.

a. Color: As selected by Architect and Owner from manufacturers full range to match Division 09 Section “Wood Athletic Flooring”.

4. Floor Sealer: Pliable, penetrating type.
5. Finish Coats: Formulated for multi-coat application on wood flooring.

C. Wood Filler: Compatible with finish system components and recommended by filler and finish manufacturers for use indicated. If required to match approved Samples, provide pigmented filler.

2.2 ACCESSORY MATERIALS

A. Plywood Underlayment: APA rated, C-D plugged, exterior glue, tongue and groove, 15/32 inch thick.

B. Fasteners: As recommended by manufacturer, but not less than that recommended in NWFA's "Installation Guidelines: Wood Flooring.".

C. Reducer Strips: To match wood flooring. 2 inches wide, tapered, and in thickness required to match height of flooring.

PART 3 - EXECUTION

3.1 EXAMINATION

A. Examine substrates, areas and conditions, with Installer present, for compliance with requirements for maximum moisture content, installation tolerances, and other conditions affecting performance of wood flooring.

B. Proceed with installation only after unsatisfactory conditions have been corrected.

3.2 PREPARATION

A. Broom or vacuum clean substrates to be covered immediately before product installation. After cleaning, examine substrates for moisture, alkaline salts, carbonation, or dust. Proceed with installation only after unsatisfactory conditions have been corrected.

3.3 INSTALLATION

A. Comply with applicable recommendations in NWFA's "Installation Guidelines: Wood Flooring.".

B. Underlayment: Install perpendicular to direction of flooring, staggering end joints in adjacent rows.

C. Provide expansion space at walls and other obstructions and terminations of flooring of not less than ¾ inch.

D. Solid-Wood Flooring: Blind nail or staple flooring to substrate.

3.4 FIELD FINISHING

A. Machine-sand flooring to remove offsets, ridges, cups, and sanding-machine marks that would be noticeable after finishing. Vacuum and tack with a clean cloth immediately before applying finish.

1. Comply with applicable recommendations in NWFA's "Installation Guidelines: Wood Flooring.".

B. Fill and repair wood flooring seams and defects.

C. Apply seal and finish coats of finish system according to finish manufacturer’s written instructions. Provide no fewer than four (4) coats total and no fewer than two (2) finish coats to match Division 09 Section “Wood Athletic Flooring”.

1. Apply stains to achieve an even color distribution matching approved Samples.
2. For water-based finishes, use finishing methods recommended by finish manufacturer to minimize grain raise.

D. Cover wood flooring before finishing.

E. Do not cover wood flooring after finishing until finish reaches full cure, and not before seven (7) days after applying last finish coat.

3.5 PROTECTION

A. Protect installed wood flooring during remainder of construction period with covering of heavy Kraft paper or other suitable material. Do not use plastic sheet or film that might cause condensation.

1. Do not move heavy and sharp objects directly over Kraft-paper-covered wood flooring. Protect flooring with plywood or hardboard panels to prevent damage from storing or moving objects over flooring.

END OF SECTION 096400

SECTION 096466 - WOOD ATHLETIC FLOORING

PART 1 - GENERAL

1.1 RELATED DOCUMENTS

A. Drawings and general provisions of the Contract, including General and Supplementary Conditions and Division 01 Specification Sections, apply to this Section.

1.2 SUMMARY

A. This Section includes wood athletic flooring.

B. Related Sections:

1. Section 012300 “Alternates”
2. Section 096400 "Wood Flooring" for traditional solid-wood and engineered-wood, strip, plank, and parquet flooring.

1.3 ACTION SUBMITTALS

A. Product Data: For each type of product indicated. Include construction details, material descriptions, dimensions of individual components and profiles, and finishes for wood athletic flooring.

B. HPBS Submittals:

1. Certificates for Section 16a-38k-6(d)(13): Chain-of-custody certificates certifying that wood flooring complies with forest certification requirements. Include evidence that manufacturer is certified for chain of custody by an FSC-accredited certification body. Include statement indicating cost for each certified wood product.
2. Product Data for Section 16a-38k-5(d): For adhesives, field-applied finishes and game-line and marker paints documentation including printed statement of VOC content.

C. Shop Drawings: For each type of floor assembly and accessory. Include plans, elevations, sections, details, and attachments to other work. Include the following:

1. Expansion provisions and trim details.
2. Layout, colors, widths, and dimensions of game lines and markers.

D. Samples: For each type of wood athletic flooring and accessory required; approximately 12 inches long and of same thickness and material indicated for the Work.

1. Include sample sets showing the full range of normal color and texture variations expected in wood flooring.
2. Include Sample sets showing finishes and game-line and marker paint colors applied to wood flooring.

1.4 INFORMATIONAL SUBMITTALS

A. Qualification Data: For qualified Installer and manufacturer.

B. Product Test Reports: Based on evaluation of comprehensive tests performed by a qualified testing agency, for wood athletic flooring system.

1.5 CLOSEOUT SUBMITTALS

A. Maintenance Data: For wood athletic flooring and finish systems to include in maintenance manuals.

1.6 QUALITY ASSURANCE

A. Manufacturer Qualifications: A qualified manufacturer that is certified for chain-of-custody certification by an FSC-accredited certification body.

B. Installer Qualifications: A firm or individual that has been approved by MFMA as an accredited Installer according to the MFMA Accreditation Program.

1. Installer responsibilities include installation and field finishing of wood athletic flooring components and accessories, and application of game lines and markers.

C. Maple Flooring: Comply with MFMA grading rules for species, grade, and cut.

1. Certification: Provide flooring that carries MFMA mark on each bundle or piece.

D. Mockups: Build mockups to verify selections made under Sample submittals and to demonstrate aesthetic effects and set quality standards for fabrication and installation.

1. Prepare finished mockup of floor area as shown on Drawings to set quality standards for sanding and application of field finishes and game lines and markers.
2. Approval of mockups does not constitute approval of deviations from the Contract Documents contained in mockups unless Architect specifically approves such deviations in writing.

1.7 DELIVERY, STORAGE, AND HANDLING

A. Deliver assembly materials in unopened cartons or bundles.

B. Protect wood from exposure to moisture. Do not deliver wood components until after concrete, masonry, plaster, ceramic tile, and similar wet work is complete and dry.

C. Store wood components in a dry, warm, well-ventilated, weathertight location and in a horizontal position.

1.8 FIELD CONDITIONS

A. Conditioning period begins not less than seven (7) days before wood athletic flooring installation, is continuous through installation, and continues not less than seven (7) days after installation.

1. Environmental Conditioning: Maintain an ambient temperature between 65 and 75 deg F (18 and 24 deg C) and relative humidity planned for building occupants, but not less than thirty-five percent (35%) or more than fifty percent (50%), in spaces to receive wood athletic flooring during the conditioning period.
2. Wood Conditioning: Move wood components into spaces where they will be installed, no later than beginning of the conditioning period.

    a. Do not install wood athletic flooring until wood components adjust to relative humidity of, and are at same temperature as, spaces where they are to be installed.
    b. Open sealed packages to allow wood components to acclimatize immediately on moving wood components into spaces in which they will be installed.

B. After conditioning period, maintain relative humidity and ambient temperature planned for building occupants.

C. Install wood athletic flooring after other finishing operations, including painting, have been completed.

1.9 GUARANTEE

A. Guarantee shall not cover damage caused in whole or in part by casualty, ordinary wear and tear, abuse, use for which material is not designed, faulty construction of the building, settlement of the building walls, failure of the other contractors to adhere to specifications, or excessive moisture from humidity, spillage, migration through the slab or wall, or any other source.

B. Provide manufacturer's warranty against defects in material for a period of one (1) year.

PART 2 - PRODUCTS

2.1 MANUFACTURERS

A. Basis-of-Design Product (**WDF-1**):

1. Action Floor Systems, LLC; **Actionfast**

B. Manufacturers: Subject to compliance with requirements, available manufacturers offering products that may be incorporated into the Work include, but are not limited to, the following:

1. Connor Floor; Subsidiary of Connor Sport Court International.
2. Horner Flooring Company, Inc.
3. Robbins Sports Surfaces.
4. Substitutions: Under provisions of Section 012500 "Substitution Procedures".

2.2 DESCRIPTION

A. System Type: Anchored resilient.

B. Overall System Height: 1-3/8 inches.

2.3 FLOORING MATERIALS

A. Certified Wood: Provide wood flooring produced from wood obtained from forests certified by an FSC-accredited certification body to comply with FSC STD-01-001, "FSC Principles and Criteria for Forest Stewardship."

B. Random-Length Strip Flooring: Northern hard maple (Acer saccharum), kiln dried, random length, tongue and groove, and end matched.

1. Grade: MFMA-RL Second and Better.

a. Exception: For areas under stacked portion of telescoping bleachers that are normally concealed from view, provide Third and Better Grade.

2. Cut: Edge.
3. Thickness: 25/32 inch.
4. Face Width: 2¼ inches.

2.4 SUBFLOOR MATERIALS

A. Plywood Underlayment: APA rated, C-D plugged, exterior glue, tongue and groove, 3/8 inch thick.

B. Channels: Manufacturer's standard as indicated by product designation above.

1. Channel Anchors: Manufacturer's standard, but not less than modified steel drive pins recommended by anchor manufacturer to achieve minimum 900-lbf pullout strength.

C. Resilient Underlayment: Flexible, multicellular, closed-cell, expanded polyethylene-foam sheet; nominal 2-lb/cu. ft. density.

1. Thickness: 5/8 inch.

2.5 FINISHES

A. Floor-Finish System: System of compatible components recommended in writing by flooring manufacturer, and MFMA approved.

1. Floor-Sealer Formulation: Pliable, penetrating type. MFMA Group 1, Sealers.
2. Finish-Coat Formulation: Formulated for gloss finish indicated and multicoat application.

a. Type: MFMA Group 5, Water-Based Finishes.

3. Game-Line and Marker Paint: Industrial enamel compatible with finish coats and recommended in writing by manufacturers of finish coats, and paint for this use.

a. See Drawings for colors and lines.

4. VOC Content: Products shall comply with the following limits for VOC content when calculated according to 40 CFR 59, Subpart D (EPA Method 24):

a. Floor Sealers and Finish Coats: VOC content of not more than 350 g/L.
b. Game-Line and Marker Paint: VOC content of not more than 150 g/L.

2.6 ACCESSORIES

A. Vapor Retarder: ASTM D 4397, polyethylene sheet not less than 6 mils thick.

B. Resilient Wall Base: Molded, vented, rubber or vinyl cove base; 4 by 3 by 48 inches; with premolded outside corners.

1. Color: As selected by Architect and Owner from manufacturer’s full range.

C. Thresholds: As specified in Section 087100 "Door Hardware".

D. Fasteners: Type and size recommended by manufacturer, but not less than those recommended by MFMA for application indicated.

E. Trowelable Leveling and Patching Compound: Latex-modified, hydraulic-cement-based formulation approved by wood athletic flooring manufacturer.

PART 3 - EXECUTION

3.1 EXAMINATION

A. Examine substrates, areas, and conditions, with Installer present, for compliance with requirements for maximum moisture content, installation tolerances, and other conditions affecting performance of wood athletic flooring.

B. Proceed with installation only after unsatisfactory conditions have been corrected.

C. Concrete Slabs: Verify that concrete substrates are dry and moisture-vapor emissions are within acceptable levels according to manufacturer's written instructions.

1. Moisture Testing: Perform tests so that each test area does not exceed 200 sq. ft., and perform no fewer than two (2) tests in each installation area and with test areas evenly spaced in installation areas.

a. Perform anhydrous calcium chloride test per ASTM F 1869, as follows:

1) Proceed with installation only after substrates have maximum moisture-vapor-emission rate of 4.5 lb of water/1000 sq. ft. in twenty-four (24) hours.

b. Perform tests recommended by manufacturer. Proceed with installation only after substrates pass testing.

3.2 PREPARATION

A. Grind high spots and fill low spots on concrete substrates to produce a maximum 1/8-inch deviation in any direction when checked with a 10-foot straight edge.

1. Use trowelable leveling and patching compounds, according to manufacturer's written instructions, to fill cracks, holes, and depressions in substrates.

B. Broom and vacuum clean substrates to be covered immediately before product installation. After cleaning, examine substrates for moisture, alkaline salts, carbonation, or dust. Proceed with installation only after unsatisfactory conditions have been corrected.

3.3 INSTALLATION

A. General: Comply with wood athletic flooring manufacturer's written instructions, but not less than written recommendations of MFMA applicable to flooring type indicated.

B. Pattern: Lay flooring parallel with long dimension of space to be floored unless otherwise indicated.

C. Expansion Spaces: Provide as indicated, but not less than that required by manufacturer's written instructions and MFMA's written recommendations at walls and other obstructions, and at interruptions and terminations of flooring.

1. Cover expansion spaces with base molding, trim, and saddles, as indicated on Drawings.

D. Vapor Retarder: Cover entire slab area beneath wood flooring. Install with joints lapped a minimum of 6 inches and sealed.

E. Underlayment: Install perpendicular to direction of flooring, staggering end joints in adjacent rows.

F. Channels: Anchor channels to substrate according to manufacturer's written instructions.

1. Install wood strip flooring across channels.

G. Strip Flooring: Mechanically fasten perpendicular to supports.

H. Installation Tolerances: 1/8 inch in 10 feet of variance from level.

3.4 SANDING AND FINISHING

A. Allow installed flooring to acclimate to ambient conditions before sanding.

B. Follow applicable recommendations in MFMA's "Industry Recommendations for Sanding, Sealing, Court Lining, Finishing, and Resurfacing of Maple Gym Floors."

C. Machine sand with coarse, medium, and fine grades of sandpaper to achieve a level, smooth, uniform surface without ridges or cups. Remove sanding dust by tack or vacuum.

D. Finish: Apply seal and finish coats of finish system according to finish manufacturer's written instructions. Provide no fewer than four (4) coats total and no fewer than two (2) finish coats.

1. Water-Based Finishes: Use finishing methods recommended by finish manufacturer to reduce grain raise and sidebonding effect.
2. Game-Line and Marker Paint: Apply game-line and marker paint between final seal coat and first finish coat according to paint manufacturer's written instructions.

a. Mask flooring at game lines and markers, and apply paint to produce lines and markers with sharp edges. **Masking tape should be pulled as soon as the paint starts to set and not allow to stand overnight.**
b. Where game lines cross, break minor game line at intersection; do not overlap lines.
c. Apply game lines and markers in widths and colors according to requirements indicated on Drawings.
d. Apply finish coats after game-line and marker paint is fully cured, a minimum of twenty-four (24) hours.

3.5 PROTECTION

A. Protect wood athletic flooring during remainder of construction period to allow finish to cure and to ensure that flooring and finish are without damage or deterioration at time of Substantial Completion.

1. Do not cover flooring after finishing until finish reaches full cure and not before seven (7) days after applying last finish coat.
2. Do not move heavy and sharp objects directly over flooring. Protect fully cured floor finishes and surfaces with plywood or hardboard panels to prevent damage from storing or moving objects over flooring.

END OF SECTION 096466

SECTION 096513 - RESILIENT BASE AND ACCESSORIES

PART 1 - GENERAL

1.1 RELATED DOCUMENTS

A. Drawings and general provisions of the Contract, including General and Supplementary Conditions and Division 01 Specification Sections, apply to this Section.

1.2 SUMMARY

A. Section Includes:

1. Resilient base.
2. Resilient stair accessories.
3. Resilient molding accessories.

1.3 ACTION SUBMITTALS

A. Product Data: For each type of product.

B. HPBS Submittals:

1. Product Data for Section 16a-38k-5(d): For adhesives, documentation including printed statement of VOC content.

C. Samples: For each exposed product and for each color and texture specified, not less than 12 inches long.

1.4 MAINTENANCE MATERIAL SUBMITTALS

A. Furnish extra materials that match products installed and that are packaged with protective covering for storage and identified with labels describing contents.

1. Furnish not less than 10 linear feet for every 500 linear feet or fraction thereof, of each type, color, pattern, and size of resilient product installed.

1.5 DELIVERY, STORAGE, AND HANDLING

A. Store resilient products and installation materials in dry spaces protected from the weather, with ambient temperatures maintained within range recommended by manufacturer, but not less than 50 deg F or more than 90 deg F.

1.6 FIELD CONDITIONS

A. Maintain ambient temperatures within range recommended by manufacturer, but not less than 70 deg F or more than 95 deg F, in spaces to receive resilient products during the following time periods:

1. Forty-eight (48) hours before installation.

2. During installation.
3. Forty-eight (48) hours after installation.

B. After installation and until Substantial Completion, maintain ambient temperatures within range recommended by manufacturer, but not less than 55 deg F or more than 95 deg F.

C. Install resilient products after other finishing operations, including painting, have been completed.

1.7 WARRANTY

A. Provide manufacturer's written limited warranties against defects in materials and against premature wear prior to warranty expiration for the materials as follows:

1. Wall Base: Two (2) years.

PART 2 - PRODUCTS

2.1 REGULATORY REQUIREMENTS

A. Conform to Class I rating with a flame spread of 0 to 25 in accordance with the requirements of Class A material in accordance with ASTM E 84. Rubber products shall be Class I, 0.45 watts/sq. cm in accordance with ASTM E 648 and NFPA 255.

2.2 THERMOPLASTIC-RUBBER BASE (**RB**)

A. Basis of Design:

1. Johnsonite; A Tarkett Company; **Traditional Wall Base**

B. Manufacturers: Subject to compliance with requirements, available manufacturers offering products that may be incorporated into the Work include, but are not limited to, the following:

1. Burke Mercer Flooring Products, Division of Burke Industries Inc.
2. Roppe Corporation, USA.
3. Substitutions: Under provisions of Section 012500 “Substitution Procedures”.

C. Product Standard: ASTM F 1861, Type TP (rubber, thermoplastic).

1. Group: I (solid, homogeneous).
2. Style and Location:

a. Style B, Cove: Provide in areas with resilient flooring.

D. Lengths: Cut lengths 48 inches long or coils in manufacturer's standard length.

E. Outside Corners: Preformed.

F. Inside Corners: Preformed.

G. Thickness, Height and Colors: As indicated in Section 090000 “Schedule of Finishes”.

2.3 RUBBER STAIR ACCESSORIES (**RST1**)

A. Fire-Test-Response Characteristics: As determined by testing identical products according to ASTM E 648 or NFPA 253 by a qualified testing agency.

1. Critical Radiant Flux Classification: Class I, not less than 0.45 W/sq. cm.

B. Basis of Design:

1. Nora Systems, Inc.; **Norament Grano**

C. Manufacturers: Subject to compliance with requirements, available manufacturers offering products that may be incorporated into the Work include, but are not limited to, the following:

1. Burke Mercer Flooring Products, Division of Burke Industries Inc.
2. Roppe Corporation, USA.
3. Substitutions: Under provisions of Section 012500 “Substitution Procedures”.

D. Stair Treads: ASTM F 2169.

1. Type: TP (rubber, thermoplastic).
2. Class: 2 (pattern; embossed, grooved, or ribbed).
3. Group: 1 (embedded abrasive strips).
4. Nosing Style: Round.
5. Nosing Height: 1¾ inches.
6. Size: Lengths and depths to fit each stair tread in one (1) piece.
7. Integral Risers: Smooth, flat; in height that fully covers substrate.

E. Locations: Provide rubber stair accessories in areas indicated and where required.

F. Thickness and Color: As indicated in Section 090000 “Schedule of Finishes”.

2.4 RUBBER MOLDING ACCESSORY

A. Basis of Design:

1. Johnsonite; A Tarkett Company; **SLT-XX-A**, **CTA-XX-K**, **CD-XX-A**, **EG-XX-H**, **RRS-XX-D**

B. Manufacturers: Subject to compliance with requirements, available manufacturers offering products that may be incorporated into the Work include, but are not limited to, the following:

1. Burke Mercer Flooring Products, Division of Burke Industries Inc.
2. Roppe Corporation, USA.
3. Substitutions: Under provisions of Section 012500 “Substitution Procedures”.

C. Description: Rubber transitions strips, mouldings, edge guards and reducers.

D. Profile and Dimensions: As indicated.

E. Locations: Provide rubber molding accessories in areas indicated and where required.

F. Colors and Patterns: As selected by Architect and Owner from full range of industry colors.

2.5 INSTALLATION MATERIALS

A. Trowelable Leveling and Patching Compounds: Latex-modified, Portland cement based or blended hydraulic-cement-based formulation provided or approved by resilient-product manufacturer for applications indicated.

B. Adhesives: Water-resistant type recommended by resilient-product manufacturer for resilient products and substrate conditions indicated.

1. Adhesives shall have a VOC content of 50 g/L or less except that adhesive for rubber stair treads shall have a VOC content of 60 g/L or less.

C. Stair-Tread Nose Filler: Two-part epoxy compound recommended by resilient stair-tread manufacturer to fill nosing substrates that do not conform to tread contours.

PART 3 - EXECUTION

3.1 EXAMINATION

A. Examine substrates, with Installer present, for compliance with requirements for maximum moisture content and other conditions affecting performance of the Work.

1. Verify that finishes of substrates comply with tolerances and other requirements specified in other Sections and that substrates are free of cracks, ridges, depressions, scale, and foreign deposits that might interfere with adhesion of resilient products.

B. Proceed with installation only after unsatisfactory conditions have been corrected.

1. Installation of resilient products indicates acceptance of surfaces and conditions.

3.2 PREPARATION

A. Prepare substrates according to manufacturer's written instructions to ensure adhesion of resilient products.

B. Concrete Substrates for Resilient Stair Accessories: Prepare horizontal surfaces according to ASTM F 710.

1. Verify that substrates are dry and free of curing compounds, sealers, and hardeners.
2. Remove substrate coatings and other substances that are incompatible with adhesives and that contain soap, wax, oil, or silicone, using mechanical methods recommended by manufacturer. Do not use solvents.
3. Alkalinity and Adhesion Testing: Perform tests recommended by manufacturer. Proceed with installation only after substrate alkalinity falls within range on pH scale recommended by manufacturer in writing, but not less than 5 or more than 9 pH.
4. Moisture Testing: Proceed with installation only after substrates pass testing according to manufacturer's written recommendations, but not less stringent than the following:

a. Perform anhydrous calcium chloride test according to ASTM F 1869. Proceed with installation only after substrates have maximum moisture-vapor-emission rate of 3 lb of water/1000 sq. ft. in twenty-four (24) hours.
b. Perform relative humidity test using in situ probes according to ASTM F 2170. Proceed with installation only after substrates have maximum seventy-five percent (75%) relative humidity level.

C. Fill cracks, holes, and depressions in substrates with trowelable leveling and patching compound; remove bumps and ridges to produce a uniform and smooth substrate.

D. Do not install resilient products until they are the same temperature as the space where they are to be installed.

1. At least forty-eight (48) hours in advance of installation, move resilient products and installation materials into spaces where they will be installed.

E. Immediately before installation, sweep and vacuum clean substrates to be covered by resilient products.

3.3 RESILIENT BASE INSTALLATION

A. Comply with manufacturer's written instructions for installing resilient base.

B. Apply resilient base to walls, columns, pilasters, casework and cabinets in toe spaces, and other permanent fixtures in rooms and areas where base is required.

C. Install resilient base in lengths as long as practical without gaps at seams and with tops of adjacent pieces aligned.

D. Tightly adhere resilient base to substrate throughout length of each piece, with base in continuous contact with horizontal and vertical substrates.

E. Do not stretch resilient base during installation.

F. On masonry surfaces or other similar irregular substrates, fill voids along top edge of resilient base with manufacturer's recommended adhesive filler material.

G. Preformed Corners: Install preformed corners before installing straight pieces.

3.4 RESILIENT ACCESSORY INSTALLATION

A. Comply with manufacturer's written instructions for installing resilient accessories.

B. Resilient Stair Accessories:

1. Use stair-tread-nose filler to fill nosing substrates that do not conform to tread contours.
2. Tightly adhere to substrates throughout length of each piece.

C. Resilient Molding Accessories: Butt to adjacent materials and tightly adhere to substrates throughout length of each piece. Install reducer strips at edges of floor covering that would otherwise be exposed.

3.5 CLEANING AND PROTECTION

A. Comply with manufacturer's written instructions for cleaning and protecting resilient products.

B. Perform the following operations immediately after completing resilient-product installation:

1. Remove adhesive and other blemishes from exposed surfaces.

C. Protect resilient products from mars, marks, indentations, and other damage from construction operations and placement of equipment and fixtures during remainder of construction period.

D. Cover resilient products subject to wear and foot traffic until Substantial Completion.

END OF SECTION 096513

SECTION 096519 - RESILIENT TILE FLOORING

PART 1 - GENERAL

1.1 RELATED DOCUMENTS

A. Drawings and general provisions of the Contract, including General and Supplementary Conditions and Division 01 Specification Sections, apply to this Section.

1.2 SUMMARY

A. Section Includes:

1. Rubber floor tile.
2. Polyester resin composition floor tile.

1.3 ACTION SUBMITTALS

A. Product Data: For each type of product.

B. HPBS Submittals:

1. Product Data for Section 16a-38k-6(d)(8): For products having recycled content, documentation indicating percentages by weight of postconsumer and preconsumer recycled content. Include statement indicating cost for each product having recycled content.
2. Product Data for Section 16a-38k-5(d): For adhesives, sealants and chemical-bonding compounds, documentation including printed statement of VOC content.

C. Shop Drawings: For each type of floor tile. Include floor tile layouts, edges, columns, doorways, enclosing partitions, built-in furniture, cabinets, and cutouts.

1. Show details of special patterns.

D. Samples for Verification: Full-size units of each color and pattern of floor tile required.

1.4 INFORMATIONAL SUBMITTALS

A. Qualification Data: For Installer.

1.5 CLOSEOUT SUBMITTALS

A. Maintenance Data: For each type of floor tile to include in maintenance manuals.

1.6 MAINTENANCE MATERIAL SUBMITTALS

A. Furnish extra materials that match products installed and that are packaged with protective covering for storage and identified with labels describing contents.

1. Floor Tile: Furnish one (1) box for every fifty (50) boxes or fraction thereof, of each type, color, and pattern of floor tile installed.

1.7 QUALITY ASSURANCE

A. Installer Qualifications: A qualified installer who employs workers for this Project who are competent in techniques required by manufacturer for floor tile installation and seaming method indicated.

1. Engage an installer who employs workers for this Project who are trained or certified by floor tile manufacturer for installation techniques required.

B. Mockups: Build mockups to verify selections made under Sample submittals and to demonstrate aesthetic effects and set quality standards for materials and execution.

1. Build mockups for floor tile including resilient base and accessories.

a. Size: Minimum 100 sq. ft. for each type, color, and pattern in locations directed by Architect.

2. Approval of mockups does not constitute approval of deviations from the Contract Documents contained in mockups unless Architect specifically approves such deviations in writing.
3. Subject to compliance with requirements, approved mockups may become part of the completed Work if undisturbed at time of Substantial Completion.

1.8 DELIVERY, STORAGE, AND HANDLING

A. Store floor tile and installation materials in dry spaces protected from the weather, with ambient temperatures maintained within range recommended by manufacturer, but not less than 50 deg F (10 deg C) or more than 90 deg F (32 deg C). Store floor tiles on flat surfaces.

1.9 FIELD CONDITIONS

A. Maintain ambient temperatures within range recommended by manufacturer, but not less than 70 deg F (21 deg C) or more than 95 deg F (35 deg C), in spaces to receive floor tile during the following time periods:

1. Forty-eight (48) hours before installation.
2. During installation.
3. Forty-eight (48) hours after installation.

B. After installation and until Substantial Completion, maintain ambient temperatures within range recommended by manufacturer, but not less than 55 deg F (13 deg C) or more than 95 deg F (35 deg C).

C. Close spaces to traffic during floor tile installation.

D. Close spaces to traffic for forty-eight (48) hours after floor tile installation.

E. Install floor tile after other finishing operations, including painting, have been completed.

PART 2 - PRODUCTS

2.1 PERFORMANCE REQUIREMENTS

A. Fire-Test-Response Characteristics: For resilient tile flooring, as determined by testing identical products according to ASTM E 648 or NFPA 253 by a qualified testing agency.

1. Critical Radiant Flux Classification: Class I, not less than 0.45 W/sq. cm.

2.2 RUBBER FLOOR TILE (**RF1**)

A. Basis of Design:

1. Nora Rubber Flooring, Freudenberg Building Systems, Inc; **Norament Grano**
2. Substitutions: Under provision of Section 012500 “Substitution Procedures”.

B. Tile Standard: ASTM F 1344, Class I-B, homogeneous rubber tile, through mottled.

C. Hardness: Not less than 75 as required by ASTM F 1344, measured using Shore, Type A durometer per ASTM D 2240.

D. Wearing Surface: Textured.

1. Molded-Pattern Figure: Hammered.
2. Slip resistant with a Coefficient of Friction of 0.8 on level surface (dry).

E. Size, Thickness, Colors and Patterns: As indicated in Section 090000 “Schedule of Finishes”.

2.3 POLYESTER RESIN COMPOSITION FLOOR TILE (**BBT**)

A. Basis of Design:

1. Armstrong World Industries, Inc; **BioBased Tile**

B. Products: Subject to compliance with requirements, available products that may be incorporated into the Work include, but are not limited to, the following:

1. Mannington Mills, Inc.
2. Tarkett, Inc.
3. Substitutions: Under provision of Section 012500 “Substitution Procedures”.

C. Tile Standard: ASTM F 2982, solid-color tile.

D. Wearing Surface: Smooth.

1. Slip resistant with a Coefficient of Friction of 0.6 on level surface (dry).

E. Thickness, Size, Colors and Patterns: As indicated in Section 090000 “Schedule of Finishes”.

2.4 INSTALLATION MATERIALS

A. Trowelable Leveling and Patching Compounds: Latex-modified, Portland cement based or blended hydraulic-cement-based formulation provided or approved by floor tile manufacturer for applications indicated.

B. Adhesives: Water-resistant type recommended by floor tile and adhesive manufacturers to suit floor tile and substrate conditions indicated.

1. Adhesives shall comply with the following limits for VOC content:

a. Tile Adhesives: 50 g/L or less.
b. Rubber Floor Adhesives: 60 g/L or less.

C. Floor Polish: Provide protective, liquid floor-polish products recommended by floor tile manufacturer.

PART 3 - EXECUTION

3.1 EXAMINATION

A. Examine substrates, with Installer present, for compliance with requirements for maximum moisture content and other conditions affecting performance of the Work.

1. Verify that finishes of substrates comply with tolerances and other requirements specified in other Sections and that substrates are free of cracks, ridges, depressions, scale, and foreign deposits that might interfere with adhesion of floor tile.

B. Proceed with installation only after unsatisfactory conditions have been corrected.

3.2 PREPARATION

A. Prepare substrates according to floor tile manufacturer's written instructions to ensure adhesion of resilient products.

B. Concrete Substrates: Prepare according to ASTM F 710.

1. Verify that substrates are dry and free of curing compounds, sealers, and hardeners.
2. Remove substrate coatings and other substances that are incompatible with adhesives and that contain soap, wax, oil, or silicone, using mechanical methods recommended by floor tile manufacturer. Do not use solvents.
3. Alkalinity and Adhesion Testing: Perform tests recommended by floor tile manufacturer. Proceed with installation only after substrate alkalinity falls within range on pH scale recommended by manufacturer in writing, but not less than 5 or more than 9 pH.
4. Moisture Testing: Proceed with installation only after substrates pass testing according to floor tile manufacturer's written recommendations, but not less stringent than the following:

a. Perform anhydrous calcium chloride test according to ASTM F 1869. Proceed with installation only after substrates have maximum moisture-vapor-emission rate of 3 lb of water/1000 sq. ft. in twenty-four (24) hours.

b. Perform relative humidity test using in situ probes according to ASTM F 2170. Proceed with installation only after substrates have a maximum seventy-five percent (75%) relative humidity level.

C. Fill cracks, holes, and depressions in substrates with trowelable leveling and patching compound; remove bumps and ridges to produce a uniform and smooth substrate. Expect and include in the Base Bid the requirement to apply and machine level at least three (3) coats of leveler in all spaces.

D. Do not install floor tiles until they are the same temperature as the space where they are to be installed.

1. At least forty-eight (48) hours in advance of installation, move resilient floor tile and installation materials into spaces where they will be installed.

E. Immediately before installation, sweep and vacuum clean substrates to be covered by resilient floor tile.

3.3 FLOOR TILE INSTALLATION

A. Comply with manufacturer's written instructions for installing floor tile.

B. Lay out floor tiles from center marks established with principal walls, discounting minor offsets, so tiles at opposite edges of room are of equal width. Adjust as necessary to avoid using cut widths that equal less than one-half tile at perimeter.

1. Lay rubber floor tiles square with room axis and polyester resin composition tiles in pattern indicated.

C. Match floor tiles for color and pattern by selecting tiles from cartons in the same sequence as manufactured and packaged, if so numbered. Discard broken, cracked, chipped, or deformed tiles.

1. Lay polyester resin composition tiles in pattern of colors and sizes indicated.

D. Scribe, cut, and fit floor tiles to butt neatly and tightly to vertical surfaces and permanent fixtures including built-in furniture, cabinets, pipes, outlets, and door frames.

E. Extend floor tiles into toe spaces, door reveals, closets, and similar openings. Extend floor tiles to center of door openings.

F. Maintain reference markers, holes, and openings that are in place or marked for future cutting by repeating on floor tiles as marked on substrates. Use chalk or other nonpermanent marking device.

G. Adhere floor tiles to flooring substrates using a full spread of adhesive applied to substrate to produce a completed installation without open cracks, voids, raising and puckering at joints, telegraphing of adhesive spreader marks, and other surface imperfections.

3.4 CLEANING AND PROTECTION

A. Comply with manufacturer's written instructions for cleaning and protecting floor tile.

B. Perform the following operations immediately after completing floor tile installation:

1. Remove adhesive and other blemishes from exposed surfaces.
2. Sweep and vacuum surfaces thoroughly.
3. Damp-mop surfaces to remove marks and soil.

C. Protect floor tile from mars, marks, indentations, and other damage from construction operations and placement of equipment and fixtures during remainder of construction period.

D. Floor Polish: Remove soil, adhesive, and blemishes from polyester resin composition floor tile surfaces before applying liquid floor polish.

1. Apply number of coats recommended by the manufacturer.

E. Cover floor tile until Substantial Completion.

END OF SECTION 096519

SECTION 096536 - STATIC-CONTROL RESILIENT FLOORING

PART 1 - GENERAL

1.1 RELATED DOCUMENTS

A. Drawings and general provisions of the Contract, including General and Supplementary Conditions and Division 01 Specification Sections, apply to this Section.

1.2 SUMMARY

A. Section Includes:

1. Static-dissipative, rubber floor tile.

B. Related Requirements:

1. Section 096513 "Resilient Base and Accessories" for resilient base, reducer strips, and other accessories installed with static-control resilient flooring.

1.3 ACTION SUBMITTALS

A. Product Data: For each type of product.

B. HPBS Submittals:

1. Product Data for Section 16a-38k-5(d): For adhesives, documentation including printed statement of VOC content.

C. Shop Drawings: For each type of static-control resilient flooring. Include floor-covering layouts, edges, columns, doorways, enclosing partitions, built-in furniture, cabinets, and cutouts.

1. Show details of special patterns.
2. Show locations of inscribed maintenance tiles.
3. Submit grounding diagram showing location of grounding strips and connections.

D. Samples for Initial Selection: For each type of static-control resilient flooring.

1.4 INFORMATIONAL SUBMITTALS

A. Qualification Data: For Installer.

B. Product Test Reports: Based on evaluation of comprehensive tests performed by a qualified testing agency, for static-control resilient flooring.

1.5 CLOSEOUT SUBMITTALS

A. Maintenance Data: For each type of static-control resilient flooring to include in maintenance manuals.

1.6 MAINTENANCE MATERIAL SUBMITTALS

A. Furnish extra materials that match products installed and that are packaged with protective covering for storage and identified with labels describing contents.

1. Floor Tile: Furnish one box for every fifty (**50**) boxes or fraction thereof, of each type, color, and pattern of floor tile installed.

1.7 QUALITY ASSURANCE

A. Installer Qualifications: A qualified installer who employs workers for this Project who are competent in techniques required by manufacturer for static-control resilient flooring.

1. Engage an installer who employs workers for this Project who are trained or certified by manufacturer for installation techniques required.

B. Mockups: Build mockups to verify selections made under Sample submittals and to demonstrate aesthetic effects and set quality standards for materials and execution.

1. Build mockups for static-control resilient flooring including resilient base and accessories.

a. Size: Minimum 100 sq. ft. for each type, color, and pattern in locations directed by Architect.

1.8 DELIVERY, STORAGE, AND HANDLING

A. Store static-control resilient flooring and installation materials in dry spaces protected from the weather, with ambient temperatures maintained within range recommended by manufacturer but not less than 50 deg F (10 deg C) or more than 90 deg F (32 deg C).

1. Floor Tile: Store on flat surfaces.

1.9 PROJECT CONDITIONS

A. Maintain ambient temperatures within range recommended by manufacturer, but not less than 70 deg F (21 deg C) or more than 85 deg F (29 deg C), in spaces to receive static-control resilient flooring during the following time periods:

1. Forty-eight (48) hours before installation.
2. During installation.
3. Seventy-two (72) hours after installation.

B. Until Substantial Completion, maintain ambient temperatures within range recommended by manufacturer, but not less than 55 deg F (13 deg C) or more than 95 deg F (35 deg C).

C. Close spaces to traffic during static-control resilient flooring installation.

D. Close spaces to traffic for forty-eight (48) hours after static-control resilient flooring installation.

E. Install static-control resilient flooring after other finishing operations, including painting, have been completed.

PART 2 - PRODUCTS

2.1 PERFORMANCE REQUIREMENTS

A. Static-Dissipative Properties: Provide static-control resilient flooring with static-control properties indicated as determined by testing identical products per test method indicated by an independent testing and inspecting agency.

1. Electrical Resistance: Test per ASTM F 150 with 100-V applied voltage.

a. Average greater than 1 megohm and less than or equal to 1000 megohms when test specimens are tested surface to ground.
b. Average greater than 1 megohm and less than or equal to 1000 megohms when installed floor coverings are tested surface to ground.

2. Static Generation: Less than 20 V when tested per AATCC-134 at twenty percent (20%) relative humidity with conductive footwear.
3. Static Decay: 5000 to zero V in less than 0.25 seconds when tested per FED-STD-101C/4046.1.

B. FloorScore Compliance: Static-control resilient flooring shall comply with requirements of FloorScore certification.

C. Fire-Test-Response Characteristics: As determined by testing identical products according to ASTM E 648 or NFPA 253 by a qualified testing agency.

1. Critical Radiant Flux Classification: Class I, not less than 0.45 W/sq. cm.

2.2 STATIC-DISSIPATIVE RESILIENT FLOOR COVERINGS

A. Static-Dissipative Rubber Floor Tile (**RF2**): ASTM F 1344; except in manufacturer's standard hardness when tested per ASTM D 2240 using Shore, Type A durometer.

1. Hammered-Surface Textured Floor Tile: Class I-B (homogenous rubber, through-mottled pattern).

a. Basis of Design:

1) Nora Rubber Flooring, Freudenberg Building Systems, Inc; **Norament Grano ED**
2) Substitutions: Under provisions of Section 012500 “Substitution Procedures”.

b. Size, Thickness, Colors and Patterns: As indicated in Section 090000 “Schedule of Finishes”.

2.3 INSTALLATION MATERIALS

A. Trowelable Leveling and Patching Compounds: Latex-modified Portland cement or blended hydraulic-cement-based formulation provided or approved by manufacturer for applications indicated.

B. Static-Control Adhesive: Provided or approved by manufacturer; type that maintains electrical continuity of floor-covering system to ground connection.

1. Adhesives shall comply with the following limits for VOC content:

a. Rubber Floor Adhesives: Not more than 60 g/L.

C. Grounding Strips: Provided or approved by manufacturer; type and size that maintains electrical continuity of floor-covering system to ground connection.

PART 3 - EXECUTION

3.1 EXAMINATION

A. Examine substrates, with Installer and manufacturer's representative present, for compliance with requirements for maximum moisture content and other conditions affecting performance of the Work.

B. Verify that finishes of substrates comply with tolerances and other requirements specified in other Sections and that substrates are free of cracks, ridges, depressions, scale, and foreign deposits that might interfere with adhesion or static-control characteristics of floor coverings.

C. Proceed with installation only after unsatisfactory conditions have been corrected.

3.2 PREPARATION

A. Prepare substrates according to manufacturer's written instructions to ensure adhesion of static-control resilient flooring and electrical continuity of floor-covering systems.

B. Concrete Substrates: Prepare according to ASTM F 710.

1. Verify that substrates are dry and free of curing compounds, sealers, and hardeners.
2. Remove substrate coatings and other substances that are incompatible with floor-covering adhesives and that contain soap, wax, oil, or silicone, using mechanical methods recommended by manufacturer. Do not use solvents.
3. Alkalinity and Adhesion Testing: Perform tests recommended by manufacturer. Proceed with installation only after substrates pass testing.
4. Moisture Testing: Perform tests recommended by manufacturer.

C. Fill cracks, holes, and depressions in substrates with trowelable leveling and patching compound and remove bumps and ridges to produce a uniform and smooth substrate. <u>Expect and include in the Base Bid the requirement to apply and machine level at least three (3) coats of leveler in all spaces.</u>

D. Do not install static-control resilient flooring until it is same temperature as space where it is to be installed.

1. Move static-control resilient flooring and installation materials into spaces where they will be installed at least forty-eight (48) hours in advance of installation.

E. Sweep and vacuum substrates to be covered by static-control resilient flooring immediately before installation.

3.3 INSTALLATION, GENERAL

A. Install static-control resilient flooring according to manufacturer's written instructions.

B. Embed grounding strips in static-control adhesive. Extend grounding strips beyond perimeter of static-control resilient floor-covering surfaces to ground connections.

C. Scribe, cut, and fit static-control resilient flooring to butt neatly and tightly to vertical surfaces and permanent fixtures including built-in furniture, cabinets, pipes, outlets, and door frames.

D. Extend static-control resilient flooring into toe spaces, door reveals, closets, and similar openings. Extend static-control resilient flooring to center of door openings.

E. Maintain reference markers, holes, and openings that are in place or marked for future cutting by repeating on static-control resilient flooring as marked on substrates. Use chalk or other nonpermanent, nonstaining marking device.

F. Adhere static-control resilient flooring to substrates using a full spread of static-control adhesive applied to substrate to produce a completed installation without open cracks, voids, raising and puckering at joints, telegraphing of adhesive spreader marks, and other surface imperfections.

3.4 FLOOR-TILE INSTALLATION

A. Comply with manufacturer's written instructions for installing floor tile.

B. Lay out floor tiles from center marks established with principal walls, discounting minor offsets, so floor tiles at opposite edges of room are of equal width. Adjust as necessary to avoid using cut widths that equal less than one-half floor tile at perimeter.

1. Lay floor tiles square with room axis.

C. Match floor tiles for color and pattern by selecting floor tiles from cartons in same sequence as manufactured and packaged if so numbered. Discard broken, cracked, chipped, or deformed floor tiles.

3.5 CLEANING AND PROTECTION

A. Comply with manufacturer's written instructions for cleaning and protection of static-control resilient flooring.

B. Perform the following operations immediately after completing static-control resilient flooring:

1. Remove static-control adhesive and other blemishes from exposed surfaces.

2. Sweep and vacuum surfaces thoroughly.
3. Damp-mop surfaces to remove marks and soil.

C. Protect static-control resilient flooring from mars, marks, indentations, and other damage from construction operations and placement of equipment and fixtures during remainder of construction period.

1. Do not wax static-control resilient flooring.

D. Cover static-control resilient flooring until Substantial Completion.

END OF SECTION 096536

SECTION 096543 - LINOLEUM FLOORING

PART 1 - GENERAL

1.1 RELATED DOCUMENTS

A. Drawings and general provisions of the Contract, including General and Supplementary Conditions and Division 01 Specification Sections, apply to this Section.

1.2 SUMMARY

A. Section includes linoleum sheet flooring.

1.3 ACTION SUBMITTALS

A. Product Data: For each type of product.

B. HPBS Submittals:

1. Product Data for Section 16a-38k-5(d): For adhesives, documentation including printed statement of VOC contents.

C. Shop Drawings: For each type of linoleum flooring. Include flooring layouts, locations of seams, edges, columns, doorways, enclosing partitions, built-in furniture, cabinets, and cutouts.

1. Show details of special patterns.

D. Samples: For each exposed product and for each color and pattern specified in manufacturer's standard size, but not less than 6-by-9-inch sections.

E. Product Schedule: For linoleum flooring.

1.4 INFORMATIONAL SUBMITTALS

A. Qualification Data: For Installer.

1.5 CLOSEOUT SUBMITTALS

A. Maintenance Data: For each type of linoleum flooring to include in maintenance manuals.

1.6 MAINTENANCE MATERIAL SUBMITTALS

A. Furnish extra materials that match products installed and that are packaged with protective covering for storage and identified with labels describing contents.

1. Sheet Flooring: Furnish not less than 10 linear feet for every 500 linear feet or fraction thereof, in roll form and in full roll width for each type, color, and pattern of sheet flooring installed.

1.7 QUALITY ASSURANCE

A. Installer Qualifications: A qualified installer who employs workers for this Project who are competent in techniques required by manufacturer for flooring installation.

1. Engage an installer who employs workers for this Project who are trained or certified by flooring manufacturer for installation techniques required.

1.8 DELIVERY, STORAGE, AND HANDLING

A. Store flooring and installation materials in dry spaces protected from the weather, with ambient temperatures maintained within range recommended by manufacturer, but not less than 65 deg F (18 deg C) or more than 90 deg F (32 deg C).

1. Sheet Flooring: Store rolls upright.

1.9 FIELD CONDITIONS

A. Maintain ambient temperatures within range recommended by manufacturer, but not less than 70 deg F (21 deg C) or more than 95 deg F (35 deg C), in spaces to receive flooring during the following time periods:

1. Seventy-two (72) hours before installation.
2. During installation.
3. Seventy-two (72) hours after installation.

B. After installation and until Substantial Completion, maintain ambient temperatures within range recommended by manufacturer, but not less than 55 deg F (13 deg C) or more than 95 deg F (35 deg C).

C. Close spaces to traffic during flooring installation.

D. Close spaces to traffic for seventy-two (72) hours after flooring installation.

E. Install flooring after other finishing operations, including painting, have been completed.

PART 2 - PRODUCTS

2.1 PERFORMANCE REQUIREMENTS

A. Fire-Test-Response Characteristics: For linoleum flooring, as determined by testing identical products according to ASTM E 648 or NFPA 253 by a qualified testing agency.

1. Critical Radiant Flux Classification: Class I, not less than 0.45 W/sq. cm.

2.2 LINOLEUM SHEET FLOORING (**LN1**)

A. Basis-of-Design Product:

1. Forbo Industries, Inc.; **Marmoleum Real**

B. Manufacturers: Subject to compliance with requirements, available manufacturers offering products that may be incorporated into the Work include, but are not limited to, the following:

1. Johnsonite; A Tarkett Company.
2. Substitutions: Under provisions of Section 012500 “Substitution Procedures”.

C. Linoleum Sheet Flooring: ASTM F 2034, Type I, linoleum sheet with backing.

1. Roll Size: In manufacturer's standard length but not less than 79 inches wide.

D. Thickness, Colors and Patterns: As indicated in Section 090000 “Schedule of Finishes”.

2.3 INSTALLATION MATERIALS

A. Trowelable Leveling and Patching Compounds: Latex-modified, Portland cement based or blended hydraulic-cement-based formulation provided or approved by linoleum flooring manufacturer for applications indicated.

B. Adhesives: Water-resistant type recommended by flooring and adhesive manufacturers to suit products and substrate conditions indicated.

1. Adhesives shall have a VOC content of 50 g/L or less.

PART 3 - EXECUTION

3.1 EXAMINATION

A. Examine substrates, with Installer present, for compliance with requirements for maximum moisture content and other conditions affecting performance of the Work.

1. Verify that finishes of substrates comply with tolerances and other requirements specified in other Sections and that substrates are free of cracks, ridges, depressions, scale, and foreign deposits that might interfere with adhesion of flooring.

B. Proceed with installation only after unsatisfactory conditions have been corrected.

3.2 PREPARATION

A. Prepare substrates according to linoleum flooring manufacturer's written instructions to ensure adhesion of flooring.

B. Concrete Substrates: Prepare according to ASTM F 710.

1. Verify that substrates are dry and free of curing compounds, sealers, and hardeners.
2. Remove substrate coatings and other substances that are incompatible with flooring adhesives and that contain soap, wax, oil, or silicone, using mechanical methods recommended by linoleum flooring manufacturer. Do not use solvents.
3. Alkalinity and Adhesion Testing: Perform tests recommended by linoleum flooring manufacturer. Proceed with installation only after substrate alkalinity falls within range on pH scale recommended by manufacturer in writing.

4. Moisture Testing: Perform tests recommended by linoleum flooring manufacturer, but not less stringent than the following:

    a. Perform anhydrous calcium chloride test according to ASTM F 1869. Proceed with installation only after substrates have maximum moisture-vapor-emission rate of 8 lb of water/1000 sq. ft. in twenty-four (24) hours.
    b. Perform relative humidity test using in situ probes according to ASTM F 2170. Proceed with installation only after substrates have maximum eighty-five percent (85%) relative humidity level.

C. Fill cracks, holes, and depressions in substrates with trowelable leveling and patching compound; remove bumps and ridges to produce a uniform and smooth substrate.

D. Do not install flooring until it is the same temperature as space where it is to be installed.

1. At least forty-eight (48) hours in advance of installation, move flooring and installation materials into spaces where they will be installed.

E. Immediately before installation, sweep and vacuum clean substrates to be covered by flooring.

3.3 INSTALLATION, GENERAL

A. Comply with manufacturer's written instructions for installing flooring.

B. Scribe and cut flooring to butt neatly and tightly to vertical surfaces, permanent fixtures, and built-in furniture including cabinets, pipes, outlets, edgings, thresholds, and nosings.

C. Extend flooring into toe spaces, door reveals, closets, and similar openings.

D. Maintain reference markers, holes, and openings that are in place or marked for future cutting by repeating on flooring as marked on substrates. Use chalk or other nonpermanent marking device.

E. Adhere flooring to substrates using a full spread of adhesive applied to substrate to produce a completed installation without open cracks, voids, raising and puckering at joints, telegraphing of adhesive spreader marks, and other surface imperfections.

3.4 LINOLEUM SHEET FLOORING INSTALLATION

A. Unroll linoleum sheet flooring and allow it to stabilize before cutting and fitting.

B. Lay out linoleum sheet flooring as follows:

1. Maintain uniformity of flooring direction.
2. Minimize number of seams; place seams in inconspicuous and low-traffic areas, at least 6 inches away from parallel joints in flooring substrates.
3. Match edges of flooring for color shading at seams.
4. Avoid cross seams.
5. Eliminate deformations that result from hanging method used during drying process (stove bar marks).

3.5 CLEANING AND PROTECTION

A. Comply with manufacturer's written instructions for cleaning and protecting linoleum flooring.

B. Perform the following operations immediately after completing linoleum flooring installation:

1. Remove adhesive and other blemishes from exposed surfaces.
2. Sweep and vacuum surfaces thoroughly.
3. Damp-mop surfaces to remove marks and soil.

C. Protect linoleum flooring from mars, marks, indentations, and other damage from construction operations and placement of equipment and fixtures during remainder of construction period.

D. After allowing drying room film (yellow film caused by linseed oil oxidation) to disappear, cover linoleum flooring until Substantial Completion.

END OF SECTION 096543

SECTION 096623 - RESINOUS MATRIX TERRAZZO FLOORING

PART 1 - GENERAL

1.1 RELATED DOCUMENTS

A. Drawings and general provisions of the Contract, including General and Supplementary Conditions and Division 01 Specification Sections, apply to this Section.

1.2 SUMMARY

A. Section Includes:

1. Precast epoxy-resin terrazzo units.

B. Related Requirements:

1. Division 01 Section "Alternates".
2. Division 07 Section "Joint Sealants" for sealants installed with terrazzo.

1.3 PREINSTALLATION MEETINGS

A. Preinstallation Conference: Conduct conference at Project site.

1. Review methods and procedures related to terrazzo including, but not limited to, the following:

a. Inspect and discuss condition of substrate and other preparatory work performed by other trades.
b. Review and finalize construction schedule and verify availability of materials, Installer's personnel, equipment, and facilities needed to make progress and avoid delays.
c. Review special terrazzo designs and patterns.

1.4 ACTION SUBMITTALS

A. Product Data: For each type of product.

B. HPBS Submittals:

1. Product Data for Section 16a-38k-6(d)(8): For products having recycled content, documentation indicating percentages by weight of postconsumer and preconsumer recycled content. Include statement indicating cost for each product having recycled content.
2. Product Data for Section 16a-38k-5(d): For adhesives and sealers, documentation including printed statement of VOC content.

C. Shop Drawings: Include terrazzo installation requirements. Include plans, elevations, sections, component details, and attachments to other work. Show layout of the following:

1. Divider strips.
2. Control-joint strips.
3. Accessory strips.
4. Abrasive strips.
5. Precast terrazzo jointing and edge configurations.
6. Terrazzo patterns.

D. Samples: For each exposed product and for each color and texture specified, 6 inches in size.

1.5 INFORMATIONAL SUBMITTALS

A. Qualification Data: For Installer.

B. Material Certificates: For each type of terrazzo material or product, from manufacturer.

C. Installer Certificates: Signed by manufacturers certifying that installers comply with requirements.

1.6 CLOSEOUT SUBMITTALS

A. Maintenance Data: For terrazzo to include in maintenance manuals.

1.7 QUALITY ASSURANCE

A. Installer Qualifications:

1. Engage an installer who is a contractor member of NTMA.

B. Source Limitations: Obtain primary terrazzo materials from single source from single manufacturer. Provide secondary materials including patching and fill material, joint sealant, and repair materials of type and from source recommended by manufacturer of primary materials.

1.8 DELIVERY, STORAGE, AND HANDLING

A. Deliver materials to Project site in supplier's original wrappings and containers, labeled with source's or manufacturer's name, material or product brand name, and lot number if any.

B. Store materials in their original, undamaged packages and containers, inside a well-ventilated area protected from weather, moisture, soiling, extreme temperatures, and humidity.

1.9 FIELD CONDITIONS

A. Field Measurements: Verify actual dimensions of construction contiguous with precast terrazzo by field measurements before fabrication.

B. Provide permanent lighting or, if permanent lighting is not in place, simulate permanent lighting conditions during terrazzo installation.

C. Close spaces to traffic during terrazzo application and for not less than twenty-four (24) hours after application unless manufacturer recommends a longer period.

D. Control and collect water and dust produced by grinding operations. Protect adjacent construction from detrimental effects of grinding operations.

1.10 WARRANTY

A. Precast terrazzo flooring and specialties are warranted against product defects for one (1) year from date of delivery, final inspection and acceptance.

PART 2 - PRODUCTS

2.1 PERFORMANCE REQUIREMENTS

A. NTMA Standards: Comply with NTMA's "Terrazzo Specifications and Design Guide" and with written recommendations for terrazzo type indicated unless more stringent requirements are specified.

2.2 PRECAST EPOXY-RESIN TERRAZZO

A. Manufacturers: Subject to compliance with requirements, available manufacturers offering products that may be incorporated into the Work include, but are not limited to, the following:

1. Precast Terrazzo Enterprises, Inc.
2. Romoco Precast Terrazzo Products.
3. Wausau Tile, Inc.; Terra Paving Products Division.
4. Substitutions: Under provisions of Division 01 Section “Substitution Procedures”.

B. Precast Terrazzo Units: Comply with NTMA's written recommendations for fabricating precast terrazzo units in sizes and profiles indicated. Reinforce units as required by unit sizes, profiles, and thicknesses and as recommended by manufacturer. Finish exposed-to-view edges and reveals to match face finish. Ease exposed edges to 1/8-inch radius.

1. Tiles.
2. Color, Pattern, and Finish: As selected by Architect and Owner from manufacturer’s full range.

2.3 STRIP MATERIALS

A. Thin-Set Divider Strips: L-type angle, 1/4 inch deep.

1. Material: Aluminum.
2. Top Width: 1/4 inch.

B. Control-Joint Strips: Separate, double L-type angles, positioned back to back, that match material and color of divider strips and in depth required for topping thickness indicated.

C. Accessory Strips: Match divider-strip width, material, and color unless otherwise indicated. Use the following types of accessory strips as required to provide a complete installation:

1. Edge-bead strips for exposed edges of terrazzo.

2.4 MISCELLANEOUS ACCESSORIES

A. Strip Adhesive: Epoxy-resin adhesive recommended by adhesive manufacturer for this use.

1. Adhesives shall have a VOC content of 70 g/L or less when calculated according to 40 CFR 59, Subpart D (EPA Method 24).

B. Anchoring Devices:

1. Strips: Provide mechanical anchoring devices or adhesives for strip materials as recommended by manufacturer and required for secure attachment to substrate.
2. Precast Terrazzo: Provide mechanical anchoring devices as recommended by fabricator for proper anchorage and support of units for conditions of installation and support.

C. Patching and Fill Material: Terrazzo manufacturer's resinous product approved and recommended by manufacturer for application indicated.

D. Joint Compound: Terrazzo manufacturer's resinous product approved and recommended by manufacturer for application indicated.

E. Resinous Matrix Terrazzo Cleaner: Chemically neutral cleaner with pH factor between seven (7) and ten (10) that is biodegradable, phosphate free, and recommended by sealer manufacturer for use on terrazzo type indicated.

F. Sealer: Slip- and stain-resistant, penetrating-type sealer that is chemically neutral; does not affect terrazzo color or physical properties; is recommended by sealer manufacturer; and complies with NTMA's "Terrazzo Specifications and Design Guide" for terrazzo type indicated.

1. Surface Friction: Not less than 0.6 according to ASTM D 2047.
2. Acid-Base Properties: With pH factor between seven (7) and ten (10).
3. Sealers shall have a VOC content of 200 g/L or less when calculated according to 40 CFR 59, Subpart D (EPA Method 24).

PART 3 - EXECUTION

3.1 EXAMINATION

A. Examine substrates and areas, with Installer present, for compliance with requirements for installation tolerances and other conditions affecting performance of the Work.

B. Proceed with installation only after unsatisfactory conditions, including levelness tolerances, have been corrected.

3.2 PREPARATION

A. Clean substrates of substances, including oil, grease, and curing compounds, that might impair terrazzo bond. Provide clean, dry, and neutral substrate for terrazzo application.

B. Concrete Slabs:

1. Provide sound concrete surfaces free of laitance, glaze, efflorescence, curing compounds, form-release agents, dust, dirt, grease, oil, and other contaminants incompatible with terrazzo.

   a. Shot-blast surfaces with an apparatus that abrades the concrete surface, contains the dispensed shot within the apparatus, and recirculates the shot by vacuum pickup.
   b. Repair damaged and deteriorated concrete according to terrazzo manufacturer's written recommendations.
   c. Use patching and fill material to fill holes and depressions in substrates according to terrazzo manufacturer's written instructions.

C. Verify that concrete substrates are dry and moisture-vapor emissions are within acceptable levels according to manufacturer's written instructions.

1. Moisture Testing: Perform tests indicated below.

   a. Calcium Chloride Test: Perform anhydrous calcium chloride test per ASTM F 1869. Proceed with installation only after substrates have maximum moisture-vapor-emission rate of 3 lb of water/1000 sq. ft. in twenty-four (24) hours.

      1) Perform tests so that each test area does not exceed 200 sq. ft., and perform not less than two (2) tests in each installation area and with test areas evenly spaced in installation areas.

D. Protect other work from water and dust generated by grinding operations. Control water and dust to comply with environmental protection regulations.

1. Erect and maintain temporary enclosures and other suitable methods to limit water damage and dust migration and to ensure adequate ambient temperatures and ventilation conditions during installation.

3.3 PRECAST TERRAZZO INSTALLATION

A. Install precast terrazzo units using method recommended by NTMA and manufacturer unless otherwise indicated.

B. Do not install units that are chipped, cracked, discolored, or not properly finished.

C. Seal joints between units with joint compound matching precast terrazzo matrix.

3.4 REPAIR

A. Cut out and replace terrazzo areas that evidence lack of bond with substrate. Cut out terrazzo areas in panels defined by strips and replace to match adjacent terrazzo, or repair panels according to NTMA's written recommendations, as approved by Architect.

3.5 CLEANING AND PROTECTION

A. Cleaning:

1. Remove grinding dust from installation and adjacent areas.
2. Wash surfaces with cleaner according to NTMA's written recommendations and manufacturer's written instructions; rinse surfaces with water and allow them to dry thoroughly.

B. Sealing:

1. Seal surfaces according to NTMA's written recommendations.
2. Apply sealer according to sealer manufacturer's written instructions.

C. Protection: Provide final protection and maintain conditions, in a manner acceptable to Installer, that ensure that terrazzo is without damage or deterioration at time of Substantial Completion.

END OF SECTION 096623

SECTION 096766 - FLUID-APPLIED ATHLETIC FLOORING

PART 1 - GENERAL

1.1 RELATED DOCUMENTS

A. Drawings and general provisions of the Contract, including General and Supplementary Conditions and Division 01 Specification Sections, apply to this Section.

1.2 SUMMARY

A. Section includes:

1. Polyurethane flooring fluid-applied over base mats.

B. Related Sections:

1. Section 096513 "Resilient Base and Accessories" for wall base and accessories installed with fluid-applied athletic flooring.

1.3 ACTION SUBMITTALS

A. Product Data: For each type of product indicated.

B. HPBS Submittals:

1. Product Data for Section 16a-38k-5(d): For adhesives, liquid applied flooring components, and game-line and marker paints, documentation including printed statement of VOC content.

C. Shop Drawings: Show installation details for flooring including layout, colors, widths, and dimensions of game lines and markers and locations of athletic equipment floor inserts.

D. Samples for Initial Selection: Manufacturer's color charts showing colors and glosses available for flooring and game-line and marker paints.

E. Samples for Verification: For each color, gloss, and texture of flooring required, 12 inches square, applied to a rigid backing. Include sample sets showing the game-line and marker paint colors applied to the flooring.

1.4 INFORMATIONAL SUBMITTALS

A. Qualification Data: For qualified Installer.

1.5 CLOSEOUT SUBMITTALS

A. Maintenance Data: For fluid-applied athletic flooring to include in maintenance manuals.

1.6 QUALITY ASSURANCE

A. Installer Qualifications: An Installer (Applicator) who is approved, trained, or certified by fluid-applied athletic flooring manufacturer.

1.7 FIELD CONDITIONS

A. Environmental Limitations: Comply with flooring manufacturer's written instructions for substrate temperature, ambient temperature, humidity, ventilation, and other conditions affecting flooring application.

1. Do not apply flooring until spaces are enclosed and weatherproof; wet work in spaces is complete and dry; and overhead work, including installing mechanical systems, lighting, and athletic equipment, is complete.
2. Maintain temperatures during installation within range recommended in writing by manufacturer, but not less than 70 deg F (21 deg C) or more than 95 deg F (35 deg C), in spaces to receive flooring forty-eight (48) hours before installation, during installation, and forty-eight (48) hours after installation unless longer period is recommended in writing by manufacturer.
3. After installation period, maintain temperatures within range recommended in writing by manufacturer, but not less than 55 deg F (13 deg C) or more than 95 deg F (35 deg C).
4. Close spaces to traffic during flooring installation.

PART 2 - PRODUCTS

2.1 FLOORING APPLIED OVER BASE MATS

A. Products: Subject to compliance with requirements, available products that may be incorporated into the Work include, but are not limited to, the following:

1. Aacer Flooring, LLC; **MP Sport**
2. Action Floor Systems, LLC; **Herculan**
3. Beynon Sports Surfaces, Inc.; **PolyTurf Plus Pad & Pour**
4. Substitutions: Under provisions of Section 012500 “Substitution Procedures”.

B. Description: Fluid-applied athletic flooring system consisting of resilient base mat adhered to substrate, base mat sealer, and fluid-applied polyurethane body and top coats.

C. Performance:

1. Low-Emitting Materials: Products shall comply with the following limits for VOC content when calculated according to 40 CFR 59, Subpart D (EPA Method 24).

a. Base Mat Adhesive: VOC content of not more than 60 g/L.
b. Base Mat Sealer: VOC content of not more than 200 g/L.
c. Body and Topcoats: VOC content of not more than 100 g/L.

D. Materials:

1. Base Mat: Manufacturer's standard base mats of granulated recycled rubber in polyurethane binder.

   a. Thickness: 10 mm.

2. Base-Mat Adhesive: Manufacturer's standard two-component polyurethane.
3. Base-Mat Sealer: Manufacturer's standard two-component polyurethane compound formulated for sealing base mat.
4. Body Coat(s): Two-component, self-leveling, pigmented, polyurethane containing no rubber fillers and no mercury.
5. Topcoat (Finish Coat): Manufacturer's standard pigmented polyurethane.

E. Finishes:

1. Color: As selected by Architect and Owner from manufacturer's full range.
2. Surface Texture: Manufacturer's standard.

2.2 ACCESSORIES

A. Trowelable Leveling and Patching Compound: Latex-modified, hydraulic-cement-based formulation approved by flooring manufacturer.

B. Game-Line and Marker Paint: Complete system including primer, if any, compatible with flooring and recommended in writing by flooring and paint manufacturers for use indicated.

1. VOC Content: Not more than 150 g/L when calculated according to 40 CFR 59, Subpart D (EPA Method 24).

PART 3 - EXECUTION

3.1 EXAMINATION

A. Examine substrates, with Installer present, for compliance with requirements for installation tolerances, moisture content, and other conditions affecting performance.

1. Verify that finishes of substrates comply with tolerances and other requirements specified in other Sections and that substrates are free of cracks, ridges, depressions, scale, and foreign deposits that might interfere with adhesion of resilient products.
2. Proceed with installation only after unsatisfactory conditions have been corrected.

3.2 PREPARATION

A. Concrete Substrates: Prepare substrates according to manufacturer's written instructions to ensure adhesion of flooring.

1. Verify that substrates are dry and free of curing compounds, sealers, and hardeners. Remove contaminants using mechanical means.
2. Alkalinity Testing: Perform pH testing according to ASTM F 710. Proceed with installation only if pH readings are not less than 7.0 and not greater than 8.5.
3. Moisture Testing:

a. Perform anhydrous calcium chloride test, ASTM F 1869. Proceed with installation only after substrates have maximum moisture-vapor-emission rate of 3 lb of water/1000 sq. ft. in twenty-four (24) hours.

1) Perform tests so that each test area does not exceed 200 sq. ft., and perform not less than two (2) tests in each installation area and with test areas evenly spaced in installation areas.

B. Remove substrate coatings and other substances that are incompatible with adhesives and that contain soap, wax, oil, or silicone, using mechanical methods recommended in writing by manufacturer. Do not use solvents.

C. Use trowelable leveling and patching compound to fill cracks, holes, and depressions in substrates.

D. Treat nonmoving substrate cracks and control joints to prevent cracks from telegraphing (reflecting) through flooring according to manufacturer's written instructions.

E. Protect substrate voids and joints to prevent flooring resins from flowing into or leaking through them.

F. Move flooring and installation materials into spaces where they will be installed at least forty-eight (48) hours in advance of installation unless manufacturer recommends a longer period in writing.

1. Do not install flooring until it is same temperature as space where it is to be installed.

G. Sweep and vacuum clean substrates to be covered by flooring immediately before installation. After cleaning, examine substrates for moisture, alkaline salts, carbonation, and dust.

H. Proceed with installation only after unsatisfactory conditions have been corrected.

I. Protect walls, floor openings, athletic equipment inserts, electrical openings, door frames, and other obstructions during installation. Cover floor and wall areas at mixing stations.

3.3 FLOORING INSTALLATION, GENERAL

A. General: Mix and apply flooring components according to manufacturer's written instructions.

1. At substrate expansion, isolation, and other moving joints, install continuous joint of same width through flooring.

3.4 INSTALLATION OF FLOORING APPLIED OVER BASE MATS

A. Adhesively apply resilient base mats to substrate according to manufacturer's written instructions.

1. Do not compress mats when fitting into place. Leave gap of width recommended in writing by manufacturer at butted base-mat sheets, walls, floor openings, athletic equipment inserts, electrical openings, door frames, and other obstructions.
2. Roll base mats to set them into adhesive and eliminate air pockets.

3. Repair ridges at seams, loose areas, and air pockets according to manufacturer's written instructions.

B. Apply seal coat to base mats before applying body coat(s).

C. Smooth ridges and high spots in seal coat before applying body coat(s).

D. Apply body coat(s) and topcoat to produce a uniform surface and finish.

3.5 GAME LINES AND MARKERS

A. Mask flooring at game lines and markers, and apply paint to produce sharp edges. Where crossing, break minor game line at intersection; do not overlap lines.

B. Lay out game lines and markers to comply with rules and diagrams published by National Federation of State High School Associations for athletic activities indicated.

3.6 PROTECTION

A. Close spaces to traffic for ninety-six (96) after flooring installation unless manufacturer recommends longer period in writing.

B. Protect flooring from mars, marks, indentations, and other damage from construction operations and placement of equipment and fixtures during remainder of construction period. Use protection methods recommended in writing by manufacturer.

1. Do not move heavy and sharp objects directly over flooring. Protect flooring with plywood or hardboard panels to prevent damage from storing or moving objects over flooring.

END OF SECTION 096766

SECTION 096813 - TILE CARPETING

PART 1 - GENERAL

1.1 RELATED DOCUMENTS

A. Drawings and general provisions of the Contract, including General and Supplementary Conditions and Division 01 Specification Sections, apply to this Section.

1.2 SUMMARY

A. Section includes modular, tufted carpet tile.

B. Related Requirements:

1. Section 024119 "Selective Demolition" for removing existing floor coverings.
2. Section 096513 "Resilient Base and Accessories" for resilient wall base and accessories installed with carpet tile.

1.3 ACTION SUBMITTALS

A. Product Data: For each type of product.

1. Include manufacturer's written data on physical characteristics, durability, and fade resistance.
2. Include installation recommendations for each type of substrate.

B. HPBS Submittals:

1. Product Data for Section 16a-38k-5(d):

a. For carpet tile, documentation indicating compliance with testing and product requirements of CRI's "Green Label Plus" program.
b. For installation adhesive, documentation including printed statement of VOC content.

2. Product Data for Section 16a-38k-6(d)(9): For products having recycled content, documentation indicating percentages by weight of postconsumer and preconsumer recycled content. Include statement indicating cost for each product having recycled content.

C. Samples: For each of the following products and for each color and texture required. Label each Sample with manufacturer's name, material description, color, pattern, and designation indicated on Drawings and in schedules.

1. Carpet Tile: Full-size Sample.

D. Sustainability: Provide the Statement of the Achievement Level the carpet has attained for Platinum, based on specific Sustainable Attribute Performance for all product stages according to ANSI/NSF 140.

1.4 INFORMATIONAL SUBMITTALS

A. Qualification Data: For Installer.

B. Product Test Reports: For carpet tile, for tests performed by a qualified testing agency.

C. Sample Warranty: For special warranty.

1.5 CLOSEOUT SUBMITTALS

A. Maintenance Data: For carpet tiles to include in maintenance manuals. Include the following:

1. Methods for maintaining carpet tile, including cleaning and stain-removal products and procedures and manufacturer's recommended maintenance schedule.
2. Precautions for cleaning materials and methods that could be detrimental to carpet tile.

1.6 MAINTENANCE MATERIAL SUBMITTALS

A. Furnish extra materials, from the same product run, that match products installed and that are packaged with protective covering for storage and identified with labels describing contents.

1. Carpet Tile: Full-size units equal to five percent (5%) of amount installed for each type indicated, but not less than 10 sq. yd.

1.7 QUALITY ASSURANCE

A. Installer Qualifications: An experienced installer who is certified by the International Certified Floorcovering Installers Association at the Commercial II certification level.

B. Fire-Test-Response Characteristics: Provide products with the critical radiant flux classification indicated in Part 2, as determined by testing identical products per ASTM E 648 by an independent testing and inspecting agency acceptable to authorities having jurisdiction.

C. Regulatory Requirements: Conform to applicable Connecticut Building code for carpet flammability requirements of Class I in accordance with ASTM E 84.

1.8 DELIVERY, STORAGE, AND HANDLING

A. Comply with CRI 104.

1.9 FIELD CONDITIONS

A. Comply with CRI 104 for temperature, humidity, and ventilation limitations.

B. Environmental Limitations: Do not deliver or install carpet tiles until spaces are enclosed and weathertight, wet work in spaces is complete and dry, and ambient temperature and humidity conditions are maintained at occupancy levels during the remainder of the construction period.

C. Do not install carpet tiles over concrete slabs until slabs have cured and are sufficiently dry to bond with adhesive and concrete slabs have pH range recommended by carpet tile manufacturer.

D. Where demountable partitions or other items are indicated for installation on top of carpet tiles, install carpet tiles before installing these items.

1.10 WARRANTY

A. Special Warranty for Carpet Tiles: Manufacturer agrees to repair or replace components of carpet tile installation that fail in materials or workmanship within specified warranty period.

1. Warranty does not include deterioration or failure of carpet tile due to unusual traffic, failure of substrate, vandalism, or abuse.
2. Failures include, but are not limited to, more than ten percent (10%) edge raveling, snags, runs, dimensional stability, excess static discharge, loss of tuft bind strength, loss of face fiber, and delamination.
3. Warranty Period: Ten (10) years from date of Substantial Completion.

PART 2 - PRODUCTS

2.1 CARPET TILE

A. Basis-of-Design Product:

1. Shaw Contract (**CPT1**, **CPT2**, **CPT3**, **CPT4**)
2. Patcraft (**CPT5**)
3. Substitutions: Under provisions of Section 012500 “Substitution Procedures”.

B. Material Characteristics: As indicated in Section 090000 “Schedule of Finishes”.

C. Performance Characteristics: As follows:

1. Critical Radiant Flux Classification: Not less than 0.45 W/sq. cm.
2. Electrostatic Propensity: Less than 3.5 kV according to AATCC 134.
3. Emissions: Provide carpet tile that complies with testing and product requirements of CRI's "Green Label Plus" program.
4. Recycled Content: Postconsumer recycled content plus one-half of preconsumer recycled content not less than thirty-nine percent (39%).

2.2 INSTALLATION ACCESSORIES

A. Trowelable Leveling and Patching Compounds: Latex-modified, hydraulic-cement-based formulation provided or recommended by carpet tile manufacturer.

B. Adhesives: Water-resistant, mildew-resistant, nonstaining, pressure-sensitive type to suit products and subfloor conditions indicated, that complies with flammability requirements for installed carpet tile and is recommended by carpet tile manufacturer for releasable installation.

1. Adhesives shall have a VOC content of 50 g/L or less when calculated according to 40 CFR 59, Subpart D (EPA Method 24).

PART 3 - EXECUTION

3.1 EXAMINATION

A. Examine substrates, areas, and conditions, with Installer present, for compliance with requirements for maximum moisture content, alkalinity range, installation tolerances, and other conditions affecting carpet tile performance. Examine carpet tile for type, color, pattern, and potential defects.

B. Concrete Subfloors: Verify that concrete slabs comply with ASTM F 710 and the following:

1. Slab substrates are dry and free of curing compounds, sealers, hardeners, and other materials that may interfere with adhesive bond. Determine adhesion and dryness characteristics by performing bond and moisture tests recommended by carpet tile manufacturer.
2. Subfloor finishes comply with requirements specified in Section 033000 "Cast-in-Place Concrete" for slabs receiving carpet tile.
3. Subfloors are free of cracks, ridges, depressions, scale, and foreign deposits.

C. Proceed with installation only after unsatisfactory conditions have been corrected.

3.2 PREPARATION

A. General: Comply with CRI 104, Section 6.2, "Site Conditions; Floor Preparation," and with carpet tile manufacturer's written installation instructions for preparing substrates indicated to receive carpet tile installation.

B. Use trowelable leveling and patching compounds, according to manufacturer's written instructions, to fill cracks, holes, depressions, and protrusions in substrates. Fill or level cracks, holes and depressions 1/8 inch wide or wider and protrusions more than 1/32 inch unless more stringent requirements are required by manufacturer's written instructions. Expect and include in the Base Bid the requirement to apply and machine level at least three (3) coats of leveler in all spaces.

C. Remove coatings, including curing compounds, and other substances that are incompatible with adhesives and that contain soap, wax, oil, or silicone, without using solvents. Use mechanical methods recommended in writing by carpet tile manufacturer.

D. Broom and vacuum clean substrates to be covered immediately before installing carpet tile.

3.3 INSTALLATION

A. General: Comply with CRI 104, Section 14, "Carpet Modules," and with carpet tile manufacturer's written installation instructions.

B. Installation Method: Glue down; install every tile with full-spread, releasable, pressure-sensitive adhesive.

C. Maintain dye lot integrity. Do not mix dye lots in same area.

D. Cut and fit carpet tile to butt tightly to vertical surfaces, permanent fixtures, and built-in furniture including cabinets, pipes, outlets, edgings, thresholds, and nosings. Bind or seal cut edges as recommended by carpet tile manufacturer.

E. Extend carpet tile into toe spaces, door reveals, closets, open-bottomed obstructions, removable flanges, alcoves, and similar openings.

F. Maintain reference markers, holes, and openings that are in place or marked for future cutting by repeating on finish flooring as marked on subfloor. Use nonpermanent, nonstaining marking device.

G. Install pattern parallel to walls and borders.

3.4 CLEANING AND PROTECTION

A. Perform the following operations immediately after installing carpet tile:

1. Remove excess adhesive, seam sealer, and other surface blemishes using cleaner recommended by carpet tile manufacturer.
2. Remove yarns that protrude from carpet tile surface.
3. Vacuum carpet tile using commercial machine with face-beater element.

B. Protect installed carpet tile to comply with CRI 104, Section 16, "Protecting Indoor Installations."

C. Protect carpet tile against damage from construction operations and placement of equipment and fixtures during the remainder of construction period. Use protection methods indicated or recommended in writing by carpet tile manufacturer.

END OF SECTION 096813

SECTION 096816 - SHEET CARPETING

PART 1 - GENERAL

1.1 RELATED DOCUMENTS

A. Drawings and general provisions of the Contract, including General and Supplementary Conditions and Division 01 Specification Sections, apply to this Section.

1.2 SUMMARY

A. Section Includes:

1. Tufted carpet.

B. Related Requirements:

1. Division 02 Section "Selective Structure Demolition" for removing existing floor coverings.
2. Division 09 Section "Resilient Base and Accessories" for resilient wall base and accessories installed with carpet.

1.3 PREINSTALLATION MEETINGS

A. Preinstallation Conference: Conduct conference at Project site.

1. Review methods and procedures related to carpet installation including, but not limited to, the following:

a. Review delivery, storage, and handling procedures.
b. Review ambient conditions and ventilation procedures.
c. Review subfloor preparation procedures.
d. Review patterning.

1.4 ACTION SUBMITTALS

A. Product Data: For the following, including installation recommendations for each type of substrate:

1. Carpet: For each type indicated. Include manufacturer's written data on physical characteristics, durability, and fade resistance.

B. HPBS Submittals:

1. Product Data:

a. For carpet, documentation indicating compliance with testing and product requirements of CRI's "Green Label Plus" program.
b. For Section 16a-38k-5(d): For installation adhesive, including printed statement of VOC content.

C. Shop Drawings: Show the following:

1. Columns, doorways, enclosing walls or partitions, built-in cabinets, and locations where cutouts are required in carpet.
2. Carpet type, color, and dye lot.
3. Locations where dye lot changes occur.
4. Seam locations, types, and methods.
5. Type of subfloor.
6. Type of installation.
7. Pattern type, repeat size, location, direction, and starting point.
8. Pile direction.
9. Type, color, and location of insets and borders.
10. Type, color, and location of edge, transition, and other accessory strips.
11. Transition details to other flooring materials.

D. Samples: For each of the following products and for each color and texture required. Label each Sample with manufacturer's name, material description, color, pattern, and designation indicated on Drawings and in schedules.

1. Carpet: 12-inch-square Sample.
2. Exposed Edge, Transition, and Other Accessory Stripping: 12-inch-long Samples.
3. Carpet Seam: 6-inch Sample.
4. Mitered Carpet Border Seam: 12-inch- square Sample. Show carpet pattern alignment.

E. Product Schedule: For carpet. Use same designations indicated on Drawings.

1.5 INFORMATIONAL SUBMITTALS

A. Qualification Data: For qualified Installer.

B. Product Test Reports: For carpet, for tests performed by a qualified testing agency.

C. Sample Warranties: For special warranties.

1.6 CLOSEOUT SUBMITTALS

A. Maintenance Data: For carpet to include in maintenance manuals. Include the following:

1. Methods for maintaining carpet, including cleaning and stain-removal products and procedures and manufacturer's recommended maintenance schedule.
2. Precautions for cleaning materials and methods that could be detrimental to carpet.

1.7 MAINTENANCE MATERIAL SUBMITTALS

A. Furnish extra materials, from the same product run, that match products installed and that are packaged with protective covering for storage and identified with labels describing contents.

1. Carpet: Full-width rolls equal to five percent (5%) of amount installed for each type indicated, but not less than 10 sq. yd.

1.8 QUALITY ASSURANCE

A. Installer Qualifications: An experienced Installer who is certified by the International Certified Floorcovering Installers Association at the Commercial II certification level.

B. Fire-Test-Response Ratings: Where indicated, provide carpet identical to those of assemblies tested for fire response per NFPA 253 by a qualified testing agency.

1.9 DELIVERY, STORAGE, AND HANDLING

A. Comply with CRI 104.

1.10 FIELD CONDITIONS

A. Comply with CRI 104 for temperature, humidity, and ventilation limitations.

B. Environmental Limitations: Do not deliver or install carpet until spaces are enclosed and weathertight, wet work in spaces is complete and dry, and ambient temperature and humidity conditions are maintained at occupancy levels during the remainder of the construction period.

C. Do not install carpet over concrete slabs until slabs have cured, are sufficiently dry to bond with adhesive, and have pH range recommended by carpet manufacturer.

D. Where demountable partitions or other items are indicated for installation on top of carpet, install carpet before installing these items.

1.11 WARRANTY

A. Special Warranty for Carpet: Manufacturer agrees to repair or replace components of carpet installation that fail in materials or workmanship within specified warranty period.

1. Warranty does not include deterioration or failure of carpet due to unusual traffic, failure of substrate, vandalism, or abuse.
2. Failures include, but are not limited to, more than ten percent (10%) loss of face fiber, edge raveling, snags, runs, loss of tuft bind strength, and delamination.
3. Warranty Period: Ten (10) years from date of Substantial Completion.

PART 2 - PRODUCTS

2.1 TUFTED CARPET

A. Products: Subject to compliance with requirements, available products that may be incorporated into the Work include, but are not limited to, the following:

1. Tandus Flooring; **VCTT**
2. Substitutions: Under provisions of Division 01 Section “Substitution Procedures”.

B. Color and Pattern: As selected by Architect and Owner from manufacturer's full range.

C. Minimum Characteristics:

1. Fiber Content: One hundred percent (100%) nylon 6, 6.
2. Fiber Type: Antron.
3. Pile Characteristic: Patterned-loop pile.
4. Pile Thickness: 0.187 inch for finished carpet per ASTM D 6859.
5. Stitches: 9.6.
6. Gage: 5/64.
7. Face Weight: 20 oz./sq. yd.
8. Primary Backing: Manufacturer's standard material.
9. Backing System: Powerbond Cushion.
10. Roll Width: 6 feet.
11. Antimicrobial Treatment: Manufacturer's standard material.
12. Performance Characteristics: As follows:

    a. Antimicrobial Activity: Not less than 2-mm halo of inhibition for gram-positive bacteria; not less than 1-mm halo of inhibition for gram-negative bacteria; no fungal growth; per AATCC 174.
    b. Electrostatic Propensity: Less than 3.5 kV per AATCC 134.
    c. Surface Flammability: Passes CPSC FF 1-70 (ASTM D 2859).
    d. Flooring Radiant Panel: Class 1 (mean average CRF: 0.45 w/sq cm or higher) (ASTM E 648).
    e. Smoke Generation: Less than 450 (ASTM E 662).
    f. Emissions: Provide carpet that complies with testing and product requirements of CRI's "Green Label Plus" program.

2.2 INSTALLATION ACCESSORIES

A. Trowelable Leveling and Patching Compounds: Latex-modified, hydraulic-cement-based formulation provided or recommended by carpet manufacturer.

B. Adhesives: Water-resistant, mildew-resistant, nonstaining type to suit products and subfloor conditions indicated, that complies with flammability requirements for installed carpet and is recommended or provided by carpet manufacturer.

1. Use adhesives with VOC content not more than 50 g/L when calculated according to 40 CFR 59, Subpart D (EPA Method 24).

C. Seam Adhesive: Hot-melt adhesive tape or similar product recommended by carpet manufacturer for sealing and taping seams and butting cut edges at backing to form secure seams and to prevent pile loss at seams.

D. Metal Edge/Transition Strips: Extruded aluminum with mill finish of profile and width shown, of height required to protect exposed edge of carpet, and of maximum lengths to minimize running joints.

PART 3 - EXECUTION

3.1 EXAMINATION

A. Examine substrates, areas, and conditions, with Installer present, for compliance with requirements for maximum moisture content, alkalinity range, installation tolerances, and other conditions affecting carpet performance. Examine carpet for type, color, pattern, and potential defects.

B. Concrete Subfloors: Verify that concrete slabs comply with ASTM F 710 and the following:

1. Slab substrates are dry and free of curing compounds, sealers, hardeners, and other materials that may interfere with adhesive bond. Determine adhesion and dryness characteristics by performing bond and moisture tests recommended by carpet manufacturer.
2. Subfloor finishes comply with requirements specified in Division 03 Section "Cast-in-Place Concrete" for slabs receiving carpet.
3. Subfloors are free of cracks, ridges, depressions, scale, and foreign deposits.

C. Proceed with installation only after unsatisfactory conditions have been corrected.

3.2 PREPARATION

A. General: Comply with CRI 104, Section 7.3, "Site Conditions; Floor Preparation," and with carpet manufacturer's written installation instructions for preparing substrates.

B. Use trowelable leveling and patching compounds, according to manufacturer's written instructions, to fill cracks, holes, depressions, and protrusions in substrates. Fill or level cracks, holes and depressions 1/8 inch wide or wider, and protrusions more than 1/32 inch, unless more stringent requirements are required by manufacturer's written instructions.

C. Remove coatings, including curing compounds, and other substances that are incompatible with adhesives and that contain soap, wax, oil, or silicone, without using solvents. Use mechanical methods recommended in writing by carpet manufacturer.

D. Broom and vacuum clean substrates to be covered immediately before installing carpet.

3.3 INSTALLATION

A. Comply with CRI 104 and carpet manufacturer's written installation instructions for the following:

1. Direct-Glue-Down Installation: Comply with CRI 104, Section 9, "Direct Glue-Down Installation."
2. Stair Installation: Comply with CRI 104, Section 13, "Carpet on Stairs" for glue-down installation.

B. Comply with carpet manufacturer's written recommendations and Shop Drawings for seam locations and direction of carpet; maintain uniformity of carpet direction and lay of pile. At doorways, center seams under the door in closed position.

C. Do not bridge building expansion joints with carpet.

D. Cut and fit carpet to butt tightly to vertical surfaces, permanent fixtures, and built-in furniture including cabinets, pipes, outlets, edgings, thresholds, and nosings. Bind or seal cut edges as recommended by carpet manufacturer.

E. Extend carpet into toe spaces, door reveals, closets, open-bottomed obstructions, removable flanges, alcoves, and similar openings.

F. Maintain reference markers, holes, and openings that are in place or marked for future cutting by repeating on finish flooring as marked on subfloor. Use nonpermanent, nonstaining marking device.

G. Install pattern parallel to walls and borders to comply with CRI 104, Section 15, "Patterned Carpet Installations" and with carpet manufacturer's written recommendations.

3.4 CLEANING AND PROTECTING

A. Perform the following operations immediately after installing carpet:

1. Remove excess adhesive, seam sealer, and other surface blemishes using cleaner recommended by carpet manufacturer.
2. Remove yarns that protrude from carpet surface.
3. Vacuum carpet using commercial machine with face-beater element.

B. Protect installed carpet to comply with CRI 104, Section 16, "Protecting Indoor Installations."

C. Protect carpet against damage from construction operations and placement of equipment and fixtures during the remainder of construction period. Use protection methods indicated or recommended in writing by carpet manufacturer and carpet adhesive manufacturer.

END OF SECTION 096816

SECTION 097200 - WALL COVERINGS

PART 1 - GENERAL

1.1 RELATED DOCUMENTS

A. Drawings and general provisions of the Contract, including General and Supplementary Conditions and Division 01 Specification Sections, apply to this Section.

1.2 SUMMARY

A. Section Includes:

1. Non-woven, PVC-free wall covering.
2. Textile wall covering.

1.3 PREINSTALLATION MEETINGS

A. Preinstallation Conference: Conduct conference at Project site.

1.4 ACTION SUBMITTALS

A. Product Data: For each type of product.

1. Include data on physical characteristics, durability, fade resistance and fire-test-response characteristics.

B. HPBS Submittals:

1. Product Data for Section 16a-38k-5(d): For adhesives, documentation including printed statement of VOC content.
2. Product Data for Section 16a-38k-6(d)(9): For products having recycled content, documentation indicating percentages by weight of postconsumer and preconsumer recycled content. Include statement indicating costs for each product having recycled content.

C. Shop Drawings: Show location and extent of each wall-covering type. Indicate pattern placement, seams and termination points.

D. Samples: For each type of wall covering and for each color, pattern, texture and finish specified, full width by 36-inch-long in size.

1. Wall-Covering Sample: From same production run to be used for the Work, with specified treatments applied. Show complete pattern repeat.

E. Product Schedule: For wall coverings. Use same designations indicated on Drawings.

1.5 INFORMATIONAL SUBMITTALS

A. Qualification Data: For testing agency.

B. Product Test Reports: For each wall covering, for tests performed by a qualified testing agency.

1.6 CLOSEOUT SUBMITTALS

A. Maintenance Data: For wall coverings to include in maintenance manuals.

1.7 MAINTENANCE MATERIAL SUBMITTALS

A. Furnish extra materials, from the same product run, that match products installed and that are packaged with protective covering for storage and identified with labels describing contents.

1. Wall-Covering Materials: For each type, color, texture and finish, full width by length to equal to five percent (5%) of amount installed.

1.8 FIELD CONDITIONS

A. Environmental Limitations: Do not deliver or install wall coverings until spaces are enclosed and weathertight, wet work in spaces is complete and dry, work above ceilings is complete, and temporary HVAC system is operating and maintaining ambient temperature and humidity conditions at levels intended for occupants after Project completion during the remainder of the construction period.

B. Lighting: Do not install wall covering until lighting that matches conditions intended for occupants after Project completion is provided on the surfaces to receive wall covering.

C. Ventilation: Provide continuous ventilation during installation and for not less than the time recommended by wall-covering manufacturer for full drying or curing.

PART 2 - PRODUCTS

2.1 PERFORMANCE REQUIREMENTS

A. Fire-Test-Response Characteristics: As determined by testing identical wall coverings applied with identical adhesives to substrates according to test method indicated below by a qualified testing agency. Identify products with appropriate markings of applicable testing agency.

1. Surface-Burning Characteristics: Comply with ASTM E 84; testing by a qualified testing agency. Identify products with appropriate markings of applicable testing agency.

a. Flame-Spread Index: 20 or less.
b. Smoke-Developed Index: 50 or less.

B. Recycled Content: Postconsumer recycled content plus one-half of preconsumer recycled content not less than thirty-five percent (35%).

2.2 NON-WOVEN, PVC-FREE WALL COVERING (**WC2**)

A. Basis-of-Design Product:

1. DesignTex Inc.; a Steelcase company; **Digital Walls**

B. Manufacturers: Subject to compliance with requirements, available manufacturers offering products that may be incorporated into the Work include, but are not limited to, the following:

1. MDC Wallcoverings.
2. Substitutions: Under provisions of Section 012500 “Substitution Procedures”.

C. Description: Provide mildew-resistant products in rolls from same production run and complying with the following:

1. FS CCC-W-408D and CFFA-W-101-D for Type II, Medium-Duty products.

D. Total Weight: 15 per linear yard, excluding coatings.

E. Width, Backing, Colors, Textures, and Patterns: As indicated in Section 090000 “Schedule of Finishes”.

2.3 TEXTILE WALL COVERING (**WC1**, **WC3**)

A. Basis-of-Design Product:

1. Wolf-Gordon; **Infinity Collection**

B. Manufacturers: Subject to compliance with requirements, available manufacturers offering products that may be incorporated into the Work include, but are not limited to, the following:

1. DesignTex Inc.; a Steelcase company.
2. Knoll, Inc.
3. RJF International Corporation.
4. Substitutions: Under provisions of Section 012500 “Substitution Procedures”.

C. Description: Provide mildew-resistant, wall coverings in rolls from same production run and that comply with ASTM F 793.

D. Total Weight: 15oz per linear yard, excluding coatings.

E. Width, Repeat, Applied Backing Material, Finish, Colors, Textures, and Patterns: As indicated in Section 090000 “Schedule of Finishes”.

2.4 ACCESSORIES

A. Adhesive: Mildew-resistant, nonstaining, strippable adhesive, for use with specific wall covering and substrate application indicated and as recommended in writing by wall-covering manufacturer.

1. Adhesive shall have a VOC content of 50 g/L or less.

B. Primer/Sealer: Mildew resistant, complying with requirements in Section 099123 "Interior Painting" and recommended in writing by primer/sealer and wall-covering manufacturers for intended substrate.

C. Seam Tape: As recommended in writing by wall-covering manufacturer.

PART 3 - EXECUTION

3.1 EXAMINATION

A. Examine substrates and conditions, with Installer present, for compliance with requirements for levelness, wall plumbness, maximum moisture content, and other conditions affecting performance of the Work.

B. Proceed with installation only after unsatisfactory conditions have been corrected.

3.2 PREPARATION

A. Comply with manufacturer's written instructions for surface preparation.

B. Clean substrates of substances that could impair bond of wall covering, including dirt, oil, grease, mold, mildew, and incompatible primers.

C. Prepare substrates to achieve a smooth, dry, clean, structurally sound surface free of flaking, unsound coatings, cracks, and defects.

1. Moisture Content: Maximum of five percent (5%) on new plaster, concrete and concrete masonry units when tested with an electronic moisture meter.
2. Plaster: Allow new plaster to cure. Neutralize areas of high alkalinity. Prime with primer recommended in writing by primer/sealer manufacturer and wall-covering manufacturer.
3. Gypsum Board: Prime with primer as recommended in writing by primer/sealer manufacturer and wall-covering manufacturer.
4. Painted Surfaces: Treat areas susceptible to pigment bleeding.

D. Check painted surfaces for pigment bleeding. Sand gloss, semigloss and eggshell finish with fine sandpaper.

E. Remove hardware and hardware accessories, electrical plates and covers, light fixture trims, and similar items.

F. Acclimatize wall-covering materials by removing them from packaging in the installation areas not less than twenty-four (24) hours before installation.

3.3 WALL-COVERING INSTALLATION

A. Comply with wall-covering manufacturers' written installation instructions applicable to products and applications indicated.

B. Cut wall-covering strips in roll number sequence. Change the roll numbers at partition breaks and corners.

C. Install strips in same order as cut from roll.

1. For solid-color, even-texture, or random-match wall coverings, reverse every other strip.

D. Install wall covering without lifted or curling edges and without visible shrinkage.

E. Trim edges and seams for color uniformity, pattern match and tight closure. Butt seams without overlaps or gaps between strips.

F. Fully bond wall covering to substrate. Remove air bubbles, wrinkles, blisters, and other defects.

3.4 CLEANING

A. Remove excess adhesive at seams, perimeter edges, and adjacent surfaces.

B. Use cleaning methods recommended in writing by wall-covering manufacturer.

C. Replace strips that cannot be cleaned.

D. Reinstall hardware and hardware accessories, electrical plates and covers, light fixture trims, and similar items.

END OF SECTION 097200

SECTION 098433 - SOUND-ABSORBING UNITS

PART 1 - GENERAL

1.1 RELATED DOCUMENTS

A. Drawings and general provisions of the Contract, including General and Supplementary Conditions and Division 01 Specification Sections, apply to this Section.

1.2 SUMMARY

A. Section includes shop-fabricated, fabric-wrapped panel units tested for acoustical performance, including:

1. Sound-absorbing wall panels.
2. Sound-diffusing wall panels.

B. Related Sections:

1. Section 097200 "Wall Coverings" for adhesively applied textile wall coverings.

1.3 DEFINITIONS

A. NRC: Noise Reduction Coefficient.

1.4 ACTION SUBMITTALS

A. Product Data: For each type of fabric facing, panel edge, core material, and mounting indicated.

B. HPBS Submittals:

1. Product Data for Section 16a-38k-6(d)(9): For products having recycled content, documentation indicating percentages by weight of postconsumer and preconsumer recycled content. Include statement indicating cost for each product having recycled content.
2. Product Certificates for Section 16a-38k-6(d)(10): For products and materials required to comply with requirements for regionally manufactured materials. Include statement indicating cost, location of manufacturer, and distance to Project for each regionally manufactured material.
3. Certificates for Section 16a-38k-6(d)(13): Chain-of-custody certificates indicating that wood-based products used in sound-absorbing units comply with forest certification requirements. Include statement indicating cost for each certified wood product.
4. Product Data for Section 16a-38k-6(b)(4): For composite wood products used in sound-absorbing wall units, documentation indicating that product contains no urea formaldehyde.

C. Shop Drawings: For sound-absorbing units. Include mounting devices and details; details at panel head, base, joints, and corners; and details at ceiling, floor base, and wall intersections. Indicate panel edge and core materials.

1. Include elevations showing panel sizes and direction of fabric weave and pattern matching.

D. Samples for Initial Selection: For each type of fabric facing from sound-absorbing unit manufacturer's full range.

1.5 INFORMATIONAL SUBMITTALS

A. Coordination Drawings: Elevations and other details, drawn to scale, on which the following items are shown and coordinated with each other, using input from installers of the items involved:

1. Electrical outlets, switches, and thermostats.
2. Items penetrating or covered by sound-absorbing units including the following:

a. Lighting fixtures.
b. Air outlets and inlets.
c. Speakers.
d. Alarms.
e. Sprinklers.
f. Access panels.

3. Show operation of hinged and sliding components covered by or adjacent to sound-absorbing wall units.

B. Warranty: Sample of special warranty.

1.6 CLOSEOUT SUBMITTALS

A. Maintenance Data: For sound-absorbing units to include in maintenance manuals. Include fabric manufacturers' written cleaning and stain-removal recommendations.

1.7 MAINTENANCE MATERIAL SUBMITTALS

A. Furnish extra materials from same production run that match products installed and that are packaged with protective covering for storage and identified with labels describing contents.

1. Fabric: For each fabric, color, and pattern installed, provide length equal to ten percent (10%) of amount installed, but no fewer than 10 yards.
2. Mounting Devices: Full-size units equal to five percent (5%) of amount installed, but no fewer than five (5) devices.

1.8 QUALITY ASSURANCE

A. Fire-Test-Response Characteristics: Provide sound-absorbing wall units meeting the following as determined by testing identical products by UL or another testing and inspecting agency acceptable to authorities having jurisdiction:

1. Surface-Burning Characteristics: As determined by testing per ASTM E 84.

a. Flame-Spread Index: 25 or less.
b. Smoke-Developed Index: 450 or less.

2. Fire Growth Contribution: Meeting acceptance criteria of local code and authorities having jurisdiction when tested according to NFPA 265 or NFPA 286.

B. Preinstallation Conference: Conduct conference at Project site.

1.9 DELIVERY, STORAGE, AND HANDLING

A. Comply with fabric and sound-absorbing unit manufacturers' written instructions for minimum and maximum temperature and humidity requirements for shipment, storage, and handling.

B. Deliver materials and units in unopened bundles and store in a temperature-controlled dry place with adequate air circulation.

1.10 PROJECT CONDITIONS

A. Environmental Limitations: Do not install sound-absorbing units until spaces are enclosed and weathertight, wet work in spaces is complete and dry, work at and above ceilings is complete, and ambient temperature and humidity conditions are maintained at the levels indicated for Project when occupied for its intended use.

B. Lighting: Do not install sound-absorbing units until a permanent level of lighting is provided on surfaces to receive the units.

C. Air-Quality Limitations: Protect sound-absorbing units from exposure to airborne odors, such as tobacco smoke, and install units under conditions free from odor contamination of ambient air.

D. Field Measurements: Verify locations of sound-absorbing wall units and actual dimensions of openings and penetrations by field measurements before fabrication.

1.11 WARRANTY

A. Special Warranty: Manufacturer's standard form in which manufacturer agrees to repair or replace components of sound-absorbing units that fail in materials or workmanship within specified warranty period.

1. Failures include, but are not limited to the following:

a. Acoustical performance.
b. Fabric sagging, distorting, or releasing from panel edge.
c. Warping of core.

2. Warranty Period: Manufacturer’s standard but minimum one (1) year from date of Substantial Completion.

PART 2 - PRODUCTS

2.1 SOUND-ABSORBING UNIT MANUFACTURERS

A. Manufacturers: Subject to compliance with requirements, available manufacturers offering products that may be incorporated into the Work include, but are not limited to, the following:

1. Acoustical Panel Systems (APS, Inc.).
2. Acoustical Solutions, Inc.
3. Decoustics Limited; a CertainTeed Ceilings company.
4. Sound Management Group LLC.
5. Substitutions: Under provisions of Section 012500 “Substitution Procedures”.

2.2 SOUND-ABSORBING UNITS

A. Sound-Absorbing Wall Panel (**AP1**): Manufacturer's standard panel construction consisting of facing material laminated to front face, edges, and back edge border of core.

1. Basis-of-Design Product:

   a. Sound Concepts Canada, Inc.; **HIR1 High Impact Resistant Panel**

2. Mounting: Back mounted with manufacturer's standard metal clips, secured to substrate.
3. Core: Manufacturer's standard fiberglass.

   a. Core-Face Layer: Manufacturer's standard tackable, impact-resistant, high-density board.

4. Edge Construction: Manufacturer's standard chemically hardened core with no frame.
5. Edge Profile: Square.
6. Corner Detail in Elevation: Square with continuous edge profile indicated.
7. Reveals between Panels: None.
8. Configuration: Flat.
9. Facing Material, Acoustical Performance and Thickness: As indicated in Section 090000 “Schedule of Finishes”.
10. Panel Width and Height: As indicated on Drawings.

B. Sound-Absorbing Wall Panel (**AP4**): Manufacturer's standard panel construction consisting of Aspen wood fibers bonded with inorganic hydraulic cement.

1. Basis-of-Design Product:

   a. Tectum Inc.; **Finale Interior Panel**

2. Mounting: Manufacturer's standard screws for appropriate substrate, heads painted to match panel. Provide all fasteners and furring strips for a complete single source installation.
3. Core: Manufacturer's standard **SoniCor** fiber core.
4. Edge Profile: Long edges beveled.
5. Reveals between Panels: None.
6. Acoustical Performance: Sound absorption NRC of not less than 0.80 according to ASTM C 423 for mounting according to ASTM E 795.
7. Minimum Recycled Content: Postconsumer recycled content plus one-half of preconsumer recycled content not less than eight percent (8%) by weight.
8. Certified Wood: Fabricate products with wood-based components produced from wood obtained from forests certified by an FSC-accredited certification body to comply with FSC STD-01-001, "FSC Principles and Criteria for Forest Stewardship."

9. Color, Thickness, Panel Width and Panel Height: As indicated in Section 090000 “Schedule of Finishes”.

C. Sound-Absorbing Wall Panel (**AP8**): Manufacturer's standard panel construction consisting of facing material laminated to front face, edges, and back edge border of core.

1. Basis-of-Design Product:

   a. Sound Concepts Canada, Inc.; S**HIR-1 Super High Impact Resistant Panel**

2. Mounting: Back mounted with manufacturer's standard metal clips, secured to substrate.
3. Core: Manufacturer's standard fiberglass.

   a. Core-Face Layer: Manufacturer's standard impact-resistant, acoustically transparent, copolymer sheet.

4. Edge Construction: Manufacturer's standard chemically hardened core with no frame.
5. Edge Profile: Square.
6. Corner Detail in Elevation: Square with continuous edge profile indicated.
7. Reveals between Panels: None.
8. Facing Material, Acoustical Performance and Thickness: As indicated in Section 090000 “Schedule of Finishes”.
9. Panel Width and Height: As indicated on Drawings.

D. Sound-Diffusing Panel (**AP3**):

1. Basis-of-Design Product:

   a. Armstrong World Industries; **Sound Diffuser**

2. Panel Shape: Pyramidal.
3. Mounting: Back mounted with manufacturer's standard metal clips, secured to substrate.
4. Core: Manufacturer's standard fire-retardant formed plastic, prepared for required acoustical performance.
5. Edge Detail: Manufacturer's standard square tegular (ceiling mount) and square (wall mount).
6. Reveals between Panels: 15/16 inch grid (ceiling mount) and none (wall mount).
7. Acoustical Performance: Sound absorption NRC of 0.10 according to ASTM C 423 according to ASTM E 795.
8. Thickness: 8 inches.
9. Minimum Recycled Content: Postconsumer recycled content plus one-half of preconsumer recycled content not less than thirty-five percent (35%) by weight.
10. Facing Material, Color, Panel Width and Panel Height: As indicated in Section 090000 “Schedule of Finishes”.

2.3 MATERIALS

A. General:

1. Regional Materials: Sound-absorbing wall units shall be manufactured within five hundred (500) miles of Project site.

B. Core Materials:

1. Glass-Fiber Board: ASTM C 612, Type standard with manufacturer; nominal density of 6 to 7 lb/cu. ft., unfaced, and dimensionally stable, molded rigid board; and with maximum flame-spread and smoke-developed indexes of 25 and 50, respectively.
2. Fire-Retardant Formed Plastic: Manufacturer's standard formed plastic with flame-spread index of 25 or less and smoke-developed index of 25 or less according to ASTM E 84.
3. Tackable, Impact-Resistant, High-Density Board for Face Layer: 1/8-inch-thick layer of compressed molded glass-fiber board with a nominal density of 16 to 18 lb/cu. ft. laminated to face of core.
4. Impact-Resistant, Acoustically Transparent, Copolymer Sheet for Face Layer: 1/16- to 1/8-inch-thick layer of perforated, noncombustible, copolymer sheet laminated to face of core.

C. Mounting Devices: Concealed on back of unit, recommended by manufacturer to support weight of unit, and as follows:

1. Metal Clips or Bar Hangers: Manufacturer's standard two-part metal "Z" clips, with one part of each clip mechanically attached to back of unit and the other part to substrate, designed to permit unit removal.

2.4 FABRICATION

A. General: Use manufacturer's standard construction except as otherwise indicated; with facing material applied to face, edges, and back border of dimensionally stable core; and with rigid edges to reinforce panel perimeter against warpage and damage.

1. Glass-Fiber Board Cores: Chemically harden core edges and areas of core where mounting devices are attached.

B. Core-Face Layer: Evenly stretched over core face and edges and securely attached to core; free from puckers, ripples, wrinkles, or sags.

C. Facing Material: Apply fabric facing fully covering visible surfaces of unit; with material stretched straight, on the grain, tight, square, and free from puckers, ripples, wrinkles, sags, blisters, seams, adhesive, or other visible distortions or foreign matter.

1. Square Corners: Tailor corners.

D. Dimensional Tolerances of Finished Units: Plus or minus 1/16 inch for the following:

1. Thickness.
2. Edge straightness.
3. Overall length and width.
4. Squareness from corner to corner.

PART 3 - EXECUTION

3.1 EXAMINATION

A. Examine fabric, fabricated units, substrates, areas, and conditions, for compliance with requirements, installation tolerances, and other conditions affecting performance of sound-absorbing wall units.

B. Proceed with installation only after unsatisfactory conditions have been corrected.

3.2 INSTALLATION

A. Install sound-absorbing units in locations indicated with vertical surfaces and edges plumb, top edges level and in alignment with other units, faces flush, and scribed to fit adjoining work accurately at borders and at penetrations.

B. Comply with sound-absorbing unit manufacturer's written instructions for installation of units using type of mounting devices indicated. Mount units securely to supporting substrate.

C. Align and level fabric pattern and grain among adjacent units.

3.3 INSTALLATION TOLERANCES

A. Variation from Plumb and Level: Plus or minus 1/16 inch.

B. Variation of Panel Joints from Hairline: Not more than 1/16 inch wide.

3.4 CLEANING

A. Clip loose threads; remove pills and extraneous materials.

B. Clean panels on completion of installation to remove dust and other foreign materials according to manufacturer's written instructions.

END OF SECTION 098433

SECTION 098439 - ACOUSTICAL CEILING CLOUDS

PART 1 - GENERAL

1.1 RELATED DOCUMENTS

A. Drawings and general provisions of the Contract, including General and Supplementary Conditions and Division 01 Specification Sections, apply to this Section.

1.2 SUMMARY

A. Section includes acoustical clouds, exposed suspension systems for ceilings and attachment fasteners for walls.

B. Related Requirements:

1. Section 095113 “Acoustical Panel Ceilings”
2. Section 092900 “Gypsum Board”
3. Division 23 Sections - HVAC
4. Division 26 Sections - Electrical

1.3 PREINSTALLATION MEETINGS

A. Preinstallation Conference: Conduct conference at Project site.

1.4 ACTION SUBMITTALS

A. Product Data: For each type of product and system.

B. HPBS Submittals:

1. Product Data for Section 16a-38k-6(d)(9): For products having recycled content, documentation indicating percentages by weight of postconsumer and preconsumer recycled content. Include statement indicating costs for each product having recycled content.

C. Shop Drawings: Layout and details of acoustical clouds. Show locations of items which are to be coordinated with acoustical clouds.

D. Samples: For each exposed product and for each color and texture specified, 6 inches in size.

1.5 INFORMATIONAL SUBMITTALS

A. Coordination Drawings: Reflected ceiling plans, drawn to scale, on which the following items are shown and coordinated with each other, using input from installers of the items involved:

1. Suspended ceiling components.
2. Structural members to which suspension systems will be attached.
3. Size and location of initial access modules for acoustical panels.
4. Items penetrating finished ceiling including the following:

a. Lighting fixtures.
b. Air outlets and inlets.
c. Speakers.
d. Sprinklers.
e. Access panels.

5. Perimeter moldings.

B. Installation Instructions: Submit manufacturer's installation instructions.

C. Certifications: Manufacturer's certifications that products comply with specified requirements, including laboratory reports showing compliance with specified tests and standards.

1.6 CLOSEOUT SUBMITTALS

A. Maintenance Data: For finishes to include in maintenance manuals.

1.7 MAINTENANCE MATERIAL SUBMITTALS

A. Furnish extra materials that match products installed and that are packaged with protective covering for storage and identified with labels describing contents.

1. Acoustical Ceiling Panels: Full-size panels equal to two percent (2%) of quantity installed.
2. Suspension-System Components: Quantity of each exposed component equal to two percent (2%) of quantity installed.
3. Wall Attachment Components: Quantity of each exposed component equal to two percent (2%) of quantity installed.

1.8 DELIVERY, STORAGE, AND HANDLING

A. Deliver acoustical panels, suspension-system components, and accessories to Project site in original, unopened packages and store them in a fully enclosed, conditioned space where they will be protected against damage from moisture, humidity, temperature extremes, direct sunlight, surface contamination, and other causes.

B. Before installing acoustical panels, permit them to reach room temperature and a stabilized moisture content.

C. Handle acoustical panels carefully to avoid chipping edges or damaging units in any way.

1.9 FIELD CONDITIONS

A. Environmental Limitations: Do not install acoustical ceilings until spaces are enclosed and weatherproof, wet work in spaces is complete and dry, work above ceilings is complete, and ambient temperature and humidity conditions are maintained at the levels indicated for Project when occupied for its intended use.

1.10 WARRANTY

A. Acoustical Clouds: Submit a written warranty executed by the manufacturer, agreeing to repair or replace acoustical clouds that fail within the warranty period. Failures include, but are not limited to:

1. Acoustical Clouds: Manufacturing defects.
2. Attachment Devices: Rusting and manufacturing defects.

B. Warranty Period:

1. Acoustical Clouds: One (1) year from date of substantial completion.
2. Attachment devices: One (1) year from date of substantial completion.

PART 2 - PRODUCTS

2.1 PERFORMANCE REQUIREMENTS

A. Seismic Performance: Acoustical ceiling shall withstand the effects of earthquake motions determined according to ASCE/SEI 7.

B. Surface-Burning Characteristics: Comply with ASTM E 84; testing by a qualified testing agency. Identify products with appropriate markings of applicable testing agency.

1. Flame-Spread Index: Comply with ASTM E 1264 for Class A materials.
2. Smoke-Developed Index: 50 or less.

2.2 ACOUSTICAL PANELS, GENERAL

A. Source Limitations:

1. Acoustical Ceiling Panel: Obtain each type from single source from single manufacturer.
2. Suspension System: Obtain each type from single source from single manufacturer.

B. Glass-Fiber-Based Panels: Made with binder containing no urea formaldehyde.

C. Acoustical Panel Colors and Patterns: Match appearance characteristics indicated for each product type.

2.3 ACOUSTICAL CLOUD MANUFACTURERS

A. Manufacturers: Subject to compliance with requirements, available manufacturers offering products that may be incorporated into the Work include, but are not limited to, the following:

1. Armstrong World Industries, Inc.
2. CertainTeed Corp.
3. Chicago Metallic Corporation
4. USG Interiors, Inc.; Subsidiary of USG Corporation
5. Substitutions: Under provisions of Section 012500 “Substitution Procedures”.

2.4 ACOUSTICAL CLOUDS

A. Basis-of-Design Product (**AP2**):

1. RPG Diffusor Systems, Inc.; **Waveform Monoradial G**
2. Material: Glass reinforced gypsum.
3. Edge/Joint Detail: Square.
4. Thickness: 1/8 inch.
5. Color, Shape and Size: As indicated in Section 090000 “Schedule of Finishes”.

B. Basis-of-Design Product (**AP5, AP6, AP7**):

1. Armstrong World Industries, Inc.; **Soundscapes Shapes**
2. Classification: Provide panels complying with ASTM E 1264 for type, form, and pattern as follows:

    a. Type and Form: Type XII, glass-fiber base with membrane-faced overlay; Form 2, cloth.
    b. Pattern: E (lightly textured).

3. LR: Not less than 0.90, white.
4. Acoustical Absorption: (ASTM C 423); White: Minimum 1.17 Sabins/sf ; Colors: Minimum 1.00 Sabins/sf.
5. Edge/Joint Detail: Square.
6. Thickness: 7/8 inch.
7. Color, Shape and Size: As indicated in Section 090000 “Schedule of Finishes”.
8. Recycled Content: Postconsumer recycled content plus one-half of preconsumer recycled content not less than eighty-two percent (82%).
9. Broad Spectrum Antimicrobial Fungicide and Bactericide Treatment: Provide acoustical panels treated with manufacturer's standard antimicrobial formulation that inhibits fungus, mold, mildew, and gram-positive and gram-negative bacteria and showing no mold, mildew, or bacterial growth when tested according to ASTM D 3273 and evaluated according to ASTM D 3274 or ASTM G 21.

2.5 METAL SUSPENSION SYSTEMS, GENERAL

A. Recycled Content: Postconsumer recycled content plus one-half of preconsumer recycled content not less than twenty-five percent (25%).

B. Metal Suspension-System Standard: Provide manufacturer's standard direct-hung metal suspension systems of types, structural classifications, and finishes indicated that comply with applicable requirements in ASTM C 635.

C. Seismic Stabilizer Bars: Manufacturer's standard perimeter stabilizers designed to accommodate seismic forces.

D. Seismic Struts: Manufacturer's standard compression struts designed to accommodate seismic forces.

E. Seismic Clips: Manufacturer's standard seismic clips designed and spaced to secure acoustical panels in place.

F. Install acoustical ceiling clouds using suspensions systems and wall mounting attachments as recommended by the manufacturer.

1. Provide concealed hardware where 360° finishing is required.

PART 3 - EXECUTION

3.1 EXAMINATION

A. Examine substrates, areas, and conditions, including structural framing to which acoustical ceilings attach or abut, with Installer present, for compliance with requirements specified in this and other Sections that affect ceiling installation and anchorage and with requirements for installation tolerances and other conditions affecting performance of acoustical panel ceilings.

B. Examine acoustical panels before installation. Reject acoustical panels that are wet, moisture damaged, or mold damaged.

C. Proceed with installation only after unsatisfactory conditions have been corrected.

3.2 PREPARATION

A. Measure each ceiling area and establish layout of acoustical panels to balance border widths at opposite edges of each ceiling. Avoid using less-than-half-width panels at borders, and comply with layout shown on reflected ceiling plans.

3.3 INSTALLATION

A. General: Install acoustical panel ceilings to comply with ASTM C 636 and seismic design requirements indicated, according to manufacturer's written instructions and CISCA's "Ceiling Systems Handbook."

B. Install panels in accordance with the manufacturer’s instructions and in compliance with the authorities having jurisdiction.

3.4 ADJUSTING AND CLEANING

A. Replace damaged and broken panels.

B. Clean exposed surfaces of acoustical cloud ceilings, including suspension-system members. Comply with manufacturer's written instructions for cleaning and touchup of minor finish damage. Remove and replace ceiling components that cannot be successfully cleaned and repaired to permanently eliminate evidence of damage.

END OF SECTION 098439

SECTION 099113 - EXTERIOR PAINTING

PART 1 - GENERAL

1.1 RELATED DOCUMENTS

A. Drawings and general provisions of the Contract, including General and Supplementary Conditions and Division 01 Specification Sections, apply to this Section.

1.2 SUMMARY

A. Section includes surface preparation and the application of paint systems on the following exterior substrates:

1. Steel.
2. Galvanized metal.

B. Related Requirements:

1. Division 05 Sections for shop priming of metal substrates with primers specified in this Section.
2. Division 09 Section "Interior Painting" for surface preparation and the application of paint systems on interior substrates.

1.3 DEFINITIONS

A. Gloss Level 5: 35 to 70 units at 60 degrees, according to ASTM D 523.

B. Gloss Level 6: 70 to 85 units at 60 degrees, according to ASTM D 523.

1.4 ACTION SUBMITTALS

A. Product Data: For each type of product. Include preparation requirements and application instructions.

B. Samples: For each type of paint system and each color and gloss of topcoat.

1. Submit Samples on rigid backing, 8 inches square.
2. Step coats on Samples to show each coat required for system.
3. Label each coat of each Sample.
4. Label each Sample for location and application area.

C. Product List: For each product indicated, include the following:

1. Cross-reference to paint system and locations of application areas. Use same designations indicated on Drawings and in schedules.

2. VOC content.

1.5 MAINTENANCE MATERIAL SUBMITTALS

A. Furnish extra materials, from the same product run, that match products installed and that are packaged with protective covering for storage and identified with labels describing contents.

1. Paint: Five percent (5%), but not less than 1 gallon of each material and color applied.

1.6 DELIVERY, STORAGE, AND HANDLING

A. Store materials not in use in tightly covered containers in well-ventilated areas with ambient temperatures continuously maintained at not less than 45 deg F (7 deg C).

1. Maintain containers in clean condition, free of foreign materials and residue.
2. Remove rags and waste from storage areas daily.

1.7 FIELD CONDITIONS

A. Apply paints only when temperature of surfaces to be painted and ambient air temperatures are between 50 and 95 deg F (10 and 35 deg C).

B. Do not apply paints in snow, rain, fog, or mist; when relative humidity exceeds eighty-five percent (85%); at temperatures less than 5 deg F (3 deg C) above the dew point; or to damp or wet surfaces.

1.8 REGULATORY REQUIREMENTS

A. Conform to Connecticut Building Code for flame and smoke rating requirements for finishes.

PART 2 - PRODUCTS

2.1 MANUFACTURERS

A. Manufacturers: Subject to compliance with requirements, available manufacturers offering products that may be incorporated into the Work include, but are not limited to, the following:

1. Behr Process Corporation
2. Benjamin Moore & Co.
3. Duron, Inc.
4. Glidden Professional
5. PPG Architectural Finishes, Inc.
6. Sherwin-Williams Company (The).
7. Substitutions: Under provisions of Division 01 Section “Substitution Procedures”.

2.2 PAINT, GENERAL

A. MPI Standards: Provide products that comply with MPI standards indicated and that are listed in its "MPI Approved Products List."

B. Material Compatibility:

1. Provide materials for use within each paint system that are compatible with one another and substrates indicated, under conditions of service and application as demonstrated by manufacturer, based on testing and field experience.
2. For each coat in a paint system, provide products recommended in writing by manufacturers of topcoat for use in paint system and on substrate indicated.

C. VOC Content: Provide materials that comply with VOC limits of authorities having jurisdiction.

D. Colors: As selected by Architect and Owner from manufacturer's full range.

2.3 METAL PRIMERS

A. Primer, Galvanized: As recommended in writing by topcoat manufacturer.

2.4 WATER-BASED PAINTS

A. Latex, Exterior Semi-Gloss (Gloss Level 5): MPI #11.

2.5 SOURCE QUALITY CONTROL

A. Testing of Paint Materials: Owner reserves the right to invoke the following procedure:

1. Owner will engage the services of a qualified testing agency to sample paint materials. Contractor will be notified in advance and may be present when samples are taken. If paint materials have already been delivered to Project site, samples may be taken at Project site. Samples will be identified, sealed, and certified by testing agency.
2. Testing agency will perform tests for compliance with product requirements.
3. Owner may direct Contractor to stop applying paints if test results show materials being used do not comply with product requirements. Contractor shall remove noncomplying paint materials from Project site, pay for testing, and repaint surfaces painted with rejected materials. Contractor will be required to remove rejected materials from previously painted surfaces if, on repainting with complying materials, the two paints are incompatible.

PART 3 - EXECUTION

3.1 EXAMINATION

A. Examine substrates and conditions, with Applicator present, for compliance with requirements for maximum moisture content and other conditions affecting performance of the Work.

B. Verify suitability of substrates, including surface conditions and compatibility with existing finishes and primers.

C. Proceed with coating application only after unsatisfactory conditions have been corrected.

1. Application of coating indicates acceptance of surfaces and conditions.

3.2 PREPARATION

A. Comply with manufacturer's written instructions and recommendations in "MPI Manual" applicable to substrates and paint systems indicated.

B. Remove hardware, covers, plates, and similar items already in place that are removable and are not to be painted. If removal is impractical or impossible because of size or weight of item, provide surface-applied protection before surface preparation and painting.

1. After completing painting operations, use workers skilled in the trades involved to reinstall items that were removed. Remove surface-applied protection.

C. Clean substrates of substances that could impair bond of paints, including dust, dirt, oil, grease, and incompatible paints and encapsulants.

1. Remove incompatible primers and reprime substrate with compatible primers or apply tie coat as required to produce paint systems indicated.

D. Galvanized-Metal Substrates: Remove grease and oil residue from galvanized sheet metal by mechanical methods to produce clean, lightly etched surfaces that promote adhesion of subsequently applied paints.

3.3 APPLICATION

A. Apply paints according to manufacturer's written instructions and recommendations in "MPI Manual."

1. Use applicators and techniques suited for paint and substrate indicated.
2. Paint surfaces behind movable items same as similar exposed surfaces. Before final installation, paint surfaces behind permanently fixed items with prime coat only.
3. Paint both sides and edges of exterior doors and entire exposed surface of exterior door frames.
4. Do not paint over labels of independent testing agencies or equipment name, identification, performance rating, or nomenclature plates.

5. Primers specified in painting schedules may be omitted on items that are factory primed or factory finished if acceptable to topcoat manufacturers.

B. Tint undercoats same color as topcoat, but tint each undercoat a lighter shade to facilitate identification of each coat if multiple coats of same material are to be applied. Provide sufficient difference in shade of undercoats to distinguish each separate coat.

C. If undercoats or other conditions show through topcoat, apply additional coats until cured film has a uniform paint finish, color, and appearance.

D. Apply paints to produce surface films without cloudiness, spotting, holidays, laps, brush marks, roller tracking, runs, sags, ropiness, or other surface imperfections. Cut in sharp lines and color breaks.

E. Painting Fire Suppression, Plumbing, HVAC, Electrical, Communication, and Electronic Safety and Security Work:

1. Paint the following work where exposed to view:

a. Equipment, including panelboards and switch gear.
b. Uninsulated metal piping.
c. Uninsulated plastic piping.
d. Pipe hangers and supports.
e. Metal conduit.
f. Plastic conduit.
g. Tanks that do not have factory-applied final finishes.

3.4 FIELD QUALITY CONTROL

A. Dry Film Thickness Testing: Owner may engage the services of a qualified testing and inspecting agency to inspect and test paint for dry film thickness.

1. Contractor shall touch up and restore painted surfaces damaged by testing.
2. If test results show that dry film thickness of applied paint does not comply with paint manufacturer's written recommendations, Contractor shall pay for testing and apply additional coats as needed to provide dry film thickness that complies with paint manufacturer's written recommendations.

3.5 CLEANING AND PROTECTION

A. At end of each workday, remove rubbish, empty cans, rags, and other discarded materials from Project site.

B. After completing paint application, clean spattered surfaces. Remove spattered paints by washing, scraping, or other methods. Do not scratch or damage adjacent finished surfaces.

C. Protect work of other trades against damage from paint application. Correct damage to work of other trades by cleaning, repairing, replacing, and refinishing, as approved by Architect, and leave in an undamaged condition.

D. At completion of construction activities of other trades, touch up and restore damaged or defaced painted surfaces.

3.6 EXTERIOR PAINTING SCHEDULE

A. Galvanized-Metal Substrates:

1. Water-Based Light Industrial Coating System:

a. Prime Coat: Primer, galvanized metal, as recommended in writing by topcoat manufacturer for exterior use on galvanized-metal substrates with topcoat indicated.
b. Intermediate Coat: Light industrial coating, exterior, water based, matching topcoat.
c. Topcoat: Light industrial coating, exterior, water based, semi-gloss (Gloss Level 5), MPI #163."

END OF SECTION 099113

SECTION 099123 - INTERIOR PAINTING

PART 1 - GENERAL

1.1 RELATED DOCUMENTS

A. Drawings and general provisions of the Contract, including General and Supplementary Conditions and Division 01 Specification Sections, apply to this Section.

1.2 SUMMARY

A. Section includes surface preparation and the application of paint systems on the following interior substrates:

1. Concrete.
2. Concrete masonry units (CMU).
3. Steel.
4. Wood.
5. Gypsum board.

B. Related Requirements:

1. Section 051200 "Structural Steel Framing" for shop priming of metal substrates with primers specified in this Section.
2. Section 099113 "Exterior Painting" for surface preparation and the application of paint systems on exterior substrates.
3. Section 099600 "High-Performance Coatings" for high-performance and special-use coatings.

1.3 DEFINITIONS

A. Gloss Level 1: Not more than 5 units at 60 degrees and 10 units at 85 degrees, according to ASTM D 523.

B. Gloss Level 3: 10 to 25 units at 60 degrees and 10 to 35 units at 85 degrees, according to ASTM D 523.

C. Gloss Level 6: 70 to 85 units at 60 degrees, according to ASTM D 523.

1.4 ACTION SUBMITTALS

A. Product Data: For each type of product. Include preparation requirements and application instructions.

B. HPBS Submittals:

1. Product Data for Section 16a-38k-5(d): For paints and coatings, including printed statement of VOC content.

C. Samples: For each type of paint system and in each color and gloss of topcoat.

1. Submit Samples on rigid backing, 8 inches square.
2. Step coats on Samples to show each coat required for system.
3. Label each coat of each Sample.
4. Label each Sample for location and application area.

D. Product List: For each product indicated, include the following:

1. Cross-reference to paint system and locations of application areas. Use same designations indicated on Drawings and in schedules.
2. Printout of current "MPI Approved Products List" for each product category specified in Part 2, with the proposed product highlighted.
3. VOC content.

1.5 MAINTENANCE MATERIAL SUBMITTALS

A. Furnish extra materials, from the same product run, that match products installed and that are packaged with protective covering for storage and identified with labels describing contents.

1. Paint: Five percent (5%), but not less than 1 gal. of each material and color applied.

1.6 DELIVERY, STORAGE, AND HANDLING

A. Store materials not in use in tightly covered containers in well-ventilated areas with ambient temperatures continuously maintained at not less than 45 deg F (7 deg C).

1. Maintain containers in clean condition, free of foreign materials and residue.
2. Remove rags and waste from storage areas daily.

1.7 FIELD CONDITIONS

A. Apply paints only when temperature of surfaces to be painted and ambient air temperatures are between 50 and 95 deg F (10 and 35 deg C).

B. Do not apply paints when relative humidity exceeds eighty-five percent (85%); at temperatures less than 5 deg F (3 deg C) above the dew point; or to damp or wet surfaces.

PART 2 - PRODUCTS

2.1 MANUFACTURERS

A. Basis of Design:

1. Sherwin-Williams Company (The)
2. No substitutions.

2.2 PAINT, GENERAL

A. MPI Standards: Provide products that comply with MPI standards indicated and that are listed in its "MPI Approved Products List."

B. Material Compatibility:

1. Provide materials for use within each paint system that are compatible with one another and substrates indicated, under conditions of service and application as demonstrated by manufacturer, based on testing and field experience.
2. For each coat in a paint system, provide products recommended in writing by manufacturers of topcoat for use in paint system and on substrate indicated.

C. VOC Content: Products shall comply with VOC limits of authorities having jurisdiction and, for interior paints and coatings applied at Project site, the following VOC limits, exclusive of colorants added to a tint base, when calculated according to 40 CFR 59, Subpart D (EPA Method 24).

1. Flat Paints and Coatings: 50 g/L.
2. Nonflat Paints and Coatings: 150 g/L.
3. Dry-Fog Coatings: 400 g/L.
4. Primers, Sealers, and Undercoaters: 200 g/L.
5. Anticorrosive and Antirust Paints Applied to Ferrous Metals: 250 g/L.
6. Zinc-Rich Industrial Maintenance Primers: 340 g/L.
7. Pretreatment Wash Primers: 420 g/L.
8. Floor Coatings: 100 g/L.
9. Shellacs, Clear: 730 g/L.
10. Shellacs, Pigmented: 550 g/L.

D. Colors: As selected by Architect and Owner from manufacturer's full range if not specified in Section 090000 "Schedule of Finishes".

2.3 BLOCK FILLERS

A. Block Filler, Latex, Interior/Exterior: **MPI #4**.

2.4 PRIMERS/SEALERS

A. Primer Sealer, Latex, Interior: **MPI #50**.

B. Primer Sealer, Alkyd, Interior: **MPI #45.**

2.5 METAL PRIMERS

A. Primer, Rust-Inhibitive, Water Based: **MPI #107**.

2.6 WATER-BASED PAINTS

A. Latex, Interior, Flat, (Gloss Level 1): **MPI #53**.

B. Latex, Interior, (Gloss Level 3): **MPI #52**.

C. Latex, Interior, Gloss, (Gloss Level 6, except minimum gloss of 65 units at 60 degrees): **MPI #114.**

D. Latex, Interior, Institutional Low Odor/VOC, (Gloss Level 3): **MPI #145**.

2.7 FLOOR COATINGS

A. Sealer, Water Based, for Concrete Floors: **MPI #99.**

B. Floor Paint, Latex, Low Gloss (Maximum Gloss Level 3): **MPI #60.**

2.8 SOURCE QUALITY CONTROL

A. Testing of Paint Materials: Owner reserves the right to invoke the following procedure:

1. Owner will engage the services of a qualified testing agency to sample paint materials. Contractor will be notified in advance and may be present when samples are taken. If paint materials have already been delivered to Project site, samples may be taken at Project site. Samples will be identified, sealed, and certified by testing agency.
2. Testing agency will perform tests for compliance with product requirements.
3. Owner may direct Contractor to stop applying coatings if test results show materials being used do not comply with product requirements. Contractor shall remove noncomplying paint materials from Project site, pay for testing, and repaint surfaces painted with rejected materials. Contractor will be required to remove rejected materials from previously painted surfaces if, on repainting with complying materials, the two (2) paints are incompatible.

PART 3 - EXECUTION

3.1 EXAMINATION

A. Examine substrates and conditions, with Applicator present, for compliance with requirements for maximum moisture content and other conditions affecting performance of the Work.

B. Maximum Moisture Content of Substrates: When measured with an electronic moisture meter as follows:

1. Concrete: Twelve percent (12%).
2. Masonry (CMU): Twelve percent (12%).
3. Wood: Fifteen percent (15%).
4. Gypsum Board: Twelve percent (12%).

C. Gypsum Board Substrates: Verify that finishing compound is sanded smooth.

D. Verify suitability of substrates, including surface conditions and compatibility with existing finishes and primers.

E. Proceed with coating application only after unsatisfactory conditions have been corrected.

1. Application of coating indicates acceptance of surfaces and conditions.

3.2 PREPARATION

A. Comply with manufacturer's written instructions and recommendations in "MPI Manual" applicable to substrates indicated.

B. Remove hardware, covers, plates, and similar items already in place that are removable and are not to be painted. If removal is impractical or impossible because of size or weight of item, provide surface-applied protection before surface preparation and painting.

1. After completing painting operations, use workers skilled in the trades involved to reinstall items that were removed. Remove surface-applied protection if any.

C. Clean substrates of substances that could impair bond of paints, including dust, dirt, oil, grease, and incompatible paints and encapsulants.

1. Remove incompatible primers and reprime substrate with compatible primers or apply tie coat as required to produce paint systems indicated.

D. Concrete Substrates: Remove release agents, curing compounds, efflorescence, and chalk. Do not paint surfaces if moisture content or alkalinity of surfaces to be painted exceeds that permitted in manufacturer's written instructions.

E. Masonry Substrates: Remove efflorescence and chalk. Do not paint surfaces if moisture content or alkalinity of surfaces or mortar joints exceed that permitted in manufacturer's written instructions.

F. Steel Substrates: Remove rust, loose mill scale, and shop primer, if any. Clean using methods recommended in writing by paint manufacturer but not less than the following:

1. SSPC-SP 2, "Hand Tool Cleaning."
2. SSPC-SP 3, "Power Tool Cleaning."

G. Shop-Primed Steel Substrates: Clean field welds, bolted connections, and abraded areas of shop paint, and paint exposed areas with the same material as used for shop priming to comply with SSPC-PA 1 for touching up shop-primed surfaces.

H. Wood Substrates:

1. Sand surfaces that will be exposed to view, and dust off.
2. Prime edges, ends, faces, undersides, and backsides of wood.

3.3 APPLICATION

A. Apply paints according to manufacturer's written instructions and to recommendations in "MPI Manual."

1. Use applicators and techniques suited for paint and substrate indicated.
2. Paint surfaces behind movable equipment and furniture same as similar exposed surfaces. Before final installation, paint surfaces behind permanently fixed equipment or furniture with prime coat only.
3. Paint front and backsides of access panels, removable or hinged covers, and similar hinged items to match exposed surfaces.
4. Do not paint over labels of independent testing agencies or equipment name, identification, performance rating, or nomenclature plates.
5. Primers specified in painting schedules may be omitted on items that are factory primed or factory finished if acceptable to topcoat manufacturers.

B. Tint each undercoat a lighter shade to facilitate identification of each coat if multiple coats of same material are to be applied. Tint undercoats to match color of topcoat, but provide sufficient difference in shade of undercoats to distinguish each separate coat.

C. If undercoats or other conditions show through topcoat, apply additional coats until cured film has a uniform paint finish, color, and appearance.

D. Apply paints to produce surface films without cloudiness, spotting, holidays, laps, brush marks, roller tracking, runs, sags, ropiness, or other surface imperfections. Cut in sharp lines and color breaks.

E. Painting Fire Suppression, Plumbing, HVAC, Electrical, Communication, and Electronic Safety and Security Work:

1. Paint the following work where exposed in equipment rooms:

a. Equipment, including panelboards.
b. Uninsulated metal piping.
c. Uninsulated plastic piping.
d. Pipe hangers and supports.
e. Metal conduit.
f. Plastic conduit.
g. Tanks that do not have factory-applied final finishes.
h. Duct, equipment, and pipe insulation having cotton or canvas insulation covering or other paintable jacket material.

2. Paint the following work where exposed in occupied spaces:

a. Equipment, including panelboards.
b. Uninsulated metal piping.
c. Uninsulated plastic piping.
d. Pipe hangers and supports.
e. Metal conduit.
f. Plastic conduit.
g. Duct, equipment, and pipe insulation having cotton or canvas insulation covering or other paintable jacket material.
h. Other items as directed by Architect.

3. Paint portions of internal surfaces of metal ducts, without liner, behind air inlets and outlets that are visible from occupied spaces.

3.4 FIELD QUALITY CONTROL

A. Dry Film Thickness Testing: Owner may engage the services of a qualified testing and inspecting agency to inspect and test paint for dry film thickness.

1. Contractor shall touch up and restore painted surfaces damaged by testing.
2. If test results show that dry film thickness of applied paint does not comply with paint manufacturer's written recommendations, Contractor shall pay for testing and apply additional coats as needed to provide dry film thickness that complies with paint manufacturer's written recommendations.

3.5 CLEANING AND PROTECTION

A. At end of each workday, remove rubbish, empty cans, rags, and other discarded materials from Project site.

B. After completing paint application, clean spattered surfaces. Remove spattered paints by washing, scraping, or other methods. Do not scratch or damage adjacent finished surfaces.

C. Protect work of other trades against damage from paint application. Correct damage to work of other trades by cleaning, repairing, replacing, and refinishing, as approved by Architect, and leave in an undamaged condition.

D. At completion of construction activities of other trades, touch up and restore damaged or defaced painted surfaces.

3.6 INTERIOR PAINTING SCHEDULE

A. Concrete Substrates, Traffic Surfaces:

1. Water-Based Clear Sealer System:

a. First Coat: Sealer, water based, for concrete floors**, MPI #99**.
b. Topcoat: Sealer, water based, for concrete floors**, MPI #99**.

B. CMU Substrates:

1. Latex System:

a. Block Filler: Block filler, latex, interior/exterior, **MPI #4**.
b. Intermediate Coat: Latex, interior, matching topcoat.
c. Topcoat: Latex, interior, gloss, (Gloss Level 6, except minimum gloss of 65 units at 60 degrees), **MPI #114**.

C. Steel Substrates:

1. Institutional Low-Odor/VOC Latex System:

a. Prime Coat: Primer, rust-inhibitive, water based **MPI #107**.
b. Intermediate Coat: Latex, interior, institutional low odor/VOC, matching topcoat.
c. Topcoat: Latex, interior, institutional low odor/VOC, (Gloss Level 3), **MPI #145**.

D. Wood Substrates, Traffic Surfaces:

1. Latex Floor Paint System:

a. Prime Coat: Primer sealer, alkyd, interior**, MPI #45**.
b. Topcoat: Floor paint, latex, low gloss (maximum Gloss Level 3)**, MPI #60**.

E. Gypsum Board Substrates:

1. Latex System:

a. Prime Coat: Primer sealer, latex, interior, **MPI #50**.
b. Prime Coat: Latex, interior, matching topcoat.
c. Intermediate Coat: Latex, interior, matching topcoat.
d. Topcoat: Latex, interior, flat, (Gloss Level 1), **MPI #53**, at ceilings.
e. Topcoat: Latex, interior, (Gloss Level 3), **MPI #52**.

END OF SECTION 099123

SECTION 099300 - STAINING AND TRANSPARENT FINISHING

PART 1 - GENERAL

1.1 RELATED DOCUMENTS

A. Drawings and general provisions of the Contract, including General and Supplementary Conditions and Division 01 Specification Sections, apply to this Section.

1.2 SUMMARY

A. Section includes surface preparation and application of wood finishes on the following substrates:

1. Interior Substrates:

a. Dressed lumber (finish carpentry).

B. Related Requirements:

1. Division 09 Section "Exterior Painting" for standard paint systems on exterior substrates.
2. Division 09 Section "Interior Painting" for stains and transparent finishes on concrete floors.

1.3 DEFINITIONS

A. Gloss Level 4: 20 to 35 units at 60 degrees and not less than 35 units at 85 degrees, according to ASTM D 523.

1.4 ACTION SUBMITTALS

A. Product Data: For each type of product indicated. Include preparation requirements and application instructions.

B. LEED Submittals:

1. Product Data for Credit IEQ 4.2: For interior stains and coatings, documentation including printed statement of VOC content.

C. Samples: For each type of finish system and in each color and gloss of finish indicated.

1. Submit Samples on representative samples of actual wood substrates, 8 inches long.
2. Label each Sample for location and application area.

D. Product List: For each product indicated, include the following:

1. Cross-reference to finish system and locations of application areas. Use same designations indicated on Drawings and in schedules.
2. Printout of current "MPI Approved Products List" for each product category specified in Part 2, with the product proposed for use highlighted.
3. VOC content.

1.5 MAINTENANCE MATERIAL SUBMITTALS

A. Furnish extra materials, from the same product run, that match products installed and that are packaged with protective covering for storage and identified with labels describing contents.

1. Stains and Transparent Finishes: Five percent (5%), but not less than 1 gal. of each material and color applied.

1.6 DELIVERY, STORAGE, AND HANDLING

A. Store materials not in use in tightly covered containers in well-ventilated areas with ambient temperatures continuously maintained at not less than 45 deg F (7 deg C).

1. Maintain containers in clean condition, free of foreign materials and residue.
2. Remove rags and waste from storage areas daily.

1.7 FIELD CONDITIONS

A. Apply finishes only when temperature of surfaces to be finished and ambient air temperatures are between 50 and 95 deg F (10 and 35 deg C).

B. Do not apply finishes when relative humidity exceeds eighty-five percent (85%); at temperatures less than 5 deg F (3 deg C) above the dew point; or to damp or wet surfaces.

PART 2 - PRODUCTS

2.1 MANUFACTURERS

A. Manufacturers: available manufacturers offering products that may be incorporated into the Work include, but are not limited to, the following:

1. Benjamin Moore & Co.
2. Pratt & Lambert.
3. Sherwin-Williams Company (The).
4. Substitutions: In accordance with Section 012500.

2.2 MATERIALS, GENERAL

A. MPI Standards: Provide products that comply with MPI standards indicated and that are listed in its "MPI Approved Products List."

B. Material Compatibility:

1. Provide materials for use within each finish system that are compatible with one another and substrates indicated, under conditions of service and application as demonstrated by manufacturer, based on testing and field experience.
2. For each coat in a finish system, provide products recommended in writing by manufacturers of topcoat for use in finish system and on substrate indicated.

C. VOC Content: Products shall comply with VOC limits of authorities having jurisdiction and, for interior stains and finishes applied at project site, the following VOC limits, exclusive of colorants added to a tint base, when calculated according to 40 CFR 59, Subpart D (EPA Method 24).

1. Clear Wood Finishes, Varnishes: VOC not more than 350 g/L.
2. Shellacs, Clear: VOC not more than 730 g/L.
3. Stains: VOC not more than 250 g/L.

D. Stain Colors: As indicated in Division 09 Section “Schedule of Finishes”.

2.3 STAINS

A. Stain, Semi-Transparent, for Interior Wood: MPI #90.

2.4 WATER-BASED VARNISHES

A. Varnish, Water Based, Clear, Satin (Gloss Level 4): MPI #128.

PART 3 - EXECUTION

3.1 EXAMINATION

A. Examine substrates and conditions, with Applicator present, for compliance with requirements for maximum moisture content and other conditions affecting performance of the Work.

B. Maximum Moisture Content of Interior Wood Substrates: Fifteen percent (15%), when measured with an electronic moisture meter.

C. Verify suitability of substrates, including surface conditions and compatibility with existing finishes and primers.

D. Proceed with finish application only after unsatisfactory conditions have been corrected.

1. Beginning finish application constitutes Contractor's acceptance of substrates and conditions.

3.2 PREPARATION

A. Comply with manufacturer's written instructions and recommendations in "MPI Architectural Painting Specification Manual" applicable to substrates indicated.

B. Remove hardware, covers, plates, and similar items already in place that are removable. If removal is impractical or impossible because of size or weight of item, provide surface-applied protection before surface preparation and finishing.

1. After completing finishing operations, use workers skilled in the trades involved to reinstall items that were removed. Remove surface-applied protection if any.

C. Clean and prepare surfaces to be finished according to manufacturer's written instructions for each particular substrate condition and as specified.

1. Remove dust, dirt, oil, and grease by washing with a detergent solution; rinse thoroughly with clean water and allow to dry. Remove grade stamps and pencil marks by sanding lightly. Remove loose wood fibers by brushing.

D. Interior Wood Substrates:

1. Refer to AWI recommendations.
2. Scrape and clean knots, and apply coat of knot sealer.
3. Sand surfaces that will be exposed to view and dust off.

3.3 APPLICATION

A. Apply finishes according to manufacturer's written instructions and recommendations in "MPI Architectural Painting Specification Manual."

1. Use applicators and techniques suited for finish and substrate indicated.
2. Finish surfaces behind movable equipment and furniture same as similar exposed surfaces.
3. Do not apply finishes over labels of independent testing agencies or equipment name, identification, performance rating, or nomenclature plates.

B. Apply finishes to produce surface films without cloudiness, holidays, lap marks, brush marks, runs, ropiness, or other surface imperfections.

3.4 CLEANING AND PROTECTION

A. At end of each workday, remove rubbish, empty cans, rags, and other discarded materials from Project site.

B. After completing finish application, clean spattered surfaces. Remove spattered materials by washing, scraping, or other methods. Do not scratch or damage adjacent finished surfaces.

C. Protect work of other trades against damage from finish application. Correct damage by cleaning, repairing, replacing, and refinishing, as approved by Architect, and leave in an undamaged condition.

D. At completion of construction activities of other trades, touch up and restore damaged or defaced finished wood surfaces.

3.5 INTERIOR WOOD-FINISH-SYSTEM SCHEDULE

A. Wood substrates, nontraffic surfaces, including wood trim.

1. Water-Based Varnish over Stain System:

a. Stain Coat: Stain, semi-transparent, for interior wood**, MPI #90**.
b. First Intermediate Coat: Water-based varnish matching topcoat.
c. Topcoat: Varnish, water based, clear, satin (Gloss Level 4)**, MPI #128**.

END OF SECTION 099300

SECTION 099600 - HIGH-PERFORMANCE COATINGS

PART 1 - GENERAL

1.1 RELATED DOCUMENTS

A. Drawings and general provisions of the Contract, including General and Supplementary Conditions and Division 01 Specification Sections, apply to this Section.

1.2 SUMMARY

A. Section includes surface preparation and application of high-performance coating systems on the following substrates:

1. Interior Substrates:

a. Concrete masonry units (CMU).
b. Gypsum board.

B. Related Requirements:

1. Section 099113 "Exterior Painting" for special-use coatings and general field painting.
2. Section 099123 "Interior Painting" for special-use coatings and general field painting.

1.3 DEFINITIONS

A. Gloss Level 6: 70 to 85 units at 60 degrees, according to ASTM D 523.

1.4 ACTION SUBMITTALS

A. Product Data: For each type of product indicated. Include preparation requirements and application instructions.

B. HPBS Submittals:

1. Product Data for Section 16a-38k-5(d): For interior coatings, documentation including printed statement of VOC content.

C. Samples for Verification: For each type of coating system and in each color and gloss of topcoat indicated.

1. Submit Samples on rigid backing, 8 inches square.
2. Step coats on Samples to show each coat required for system.
3. Label each coat of each Sample.
4. Label each Sample for location and application area.

D. Product List: For each product indicated, include the following:

1. Cross-reference to paint system and locations of application areas. Use same designations indicated on Drawings and in schedules.

2. Printout of current "MPI Approved Products List" for each product category specified in Part 2, with the proposed product highlighted.
3. VOC content.

1.5 MAINTENANCE MATERIAL SUBMITTALS

A. Furnish extra materials, from the same product run, that match products installed and that are packaged with protective covering for storage and identified with labels describing contents.

1. Coatings: Five percent (5%), but not less than 1 gal. of each material and color applied.

1.6 DELIVERY, STORAGE, AND HANDLING

A. Store materials not in use in tightly covered containers in well-ventilated areas with ambient temperatures continuously maintained at not less than 45 deg F.

1. Maintain containers in clean condition, free of foreign materials and residue.
2. Remove rags and waste from storage areas daily.

1.7 FIELD CONDITIONS

A. Apply coatings only when temperature of surfaces to be coated and surrounding air temperatures are between 50 and 95 deg F.

B. Do not apply coatings when relative humidity exceeds eighty-five percent (85%); at temperatures less than 5 deg F above the dew point; or to damp or wet surfaces.

C. Do not apply exterior coatings in snow, rain, fog, or mist.

PART 2 - PRODUCTS

2.1 MANUFACTURERS

A. Manufacturers: Subject to compliance with requirements, available manufacturers offering products that may be incorporated into the Work include, but are not limited to, the following:

1. Behr Process Corporation. Benjamin Moore & Co.
2. Duron, Inc.
3. ICI Paints
4. PPG Architectural Finishes, Inc.
5. Sherwin-Williams Company (The)
6. Substitutions: Under provisions of Section 012500 “Substitution Procedures”.

2.2 HIGH-PERFORMANCE COATINGS, GENERAL

A. MPI Standards: Provide products that comply with MPI standards indicated and are listed in "MPI Approved Products List."

B. Material Compatibility:

1. Provide materials for use within each coating system that are compatible with one another and substrates indicated, under conditions of service and application as demonstrated by manufacturer, based on testing and field experience.
2. For each coat in a coating system, provide products recommended in writing by manufacturers of topcoat for use in coating system and on substrate indicated.
3. Provide products of same manufacturer for each coat in a coating system.

C. VOC Content: Products shall comply with VOC limits of authorities having jurisdiction and, for interior coatings applied at project site, the following VOC limits, exclusive of colorants added to a tint base, when calculated according to 40 CFR 59, Subpart D (EPA Method 24).

1. Flat Paints and Coatings: 50 g/L.
2. Nonflat Paints and Coatings: 150 g/L.
3. Primers, Sealers, and Undercoaters: 200 g/L.
4. Anti-Corrosive and Anti-Rust Paints Applied to Ferrous Metals: 250 g/L.
5. Zinc-Rich Industrial Maintenance Primers: 340 g/L.
6. Pre-Treatment Wash Primers: 420 g/L.
7. Floor Coatings: 100 g/L.
8. Shellacs, Clear: 730 g/L.
9. Shellacs, Pigmented: 550 g/L.

D. Colors: As selected by Architect and Owner from manufacturer's full range if not specified in Section 090000 “Schedule of Finishes”.

2.3 BLOCK FILLERS

A. Block Filler, Latex, Interior/Exterior: **MPI #4.**

2.4 INTERIOR PRIMERS/SEALERS

A. Primer Sealer, Latex, Interior: **MPI #50.**

2.5 EPOXY COATINGS

A. Epoxy-Modified Latex, Interior, Gloss (Gloss Level 6): **MPI #115.**

2.6 SOURCE QUALITY CONTROL

A. Testing of Coating Materials: Owner reserves the right to invoke the following procedure:

1. Owner will engage the services of a qualified testing agency to sample coating materials. Contractor will be notified in advance and may be present when samples are taken. If coating materials have already been delivered to Project site, samples may be taken at Project site. Samples will be identified, sealed, and certified by testing agency.
2. Testing agency will perform tests for compliance with product requirements.
3. Owner may direct Contractor to stop applying paints if test results show materials being used do not comply with product requirements. Contractor shall remove noncomplying coating materials from Project site, pay for testing, and recoat surfaces coated with rejected materials. Contractor will be required to remove rejected materials from previously coated surfaces if, on recoating with complying materials, the two (2) coatings are incompatible.

PART 3 - EXECUTION

3.1 EXAMINATION

A. Examine substrates and conditions, with Applicator present, for compliance with requirements for maximum moisture content and other conditions affecting performance of the Work.

1. Maximum Moisture Content of Substrates: When measured with an electronic moisture meter as follows:

a. Masonry (Clay and CMU): Twelve percent (12%).
b. Gypsum Board: Twelve percent (12%).

B. Gypsum Board Substrates: Verify that finishing compound is sanded smooth.

C. Verify suitability of substrates, including surface conditions and compatibility with existing finishes and primers.

D. Proceed with coating application only after unsatisfactory conditions have been corrected.

1. Beginning coating application constitutes Contractor's acceptance of substrates and conditions.

3.2 PREPARATION

A. Comply with manufacturer's written instructions and recommendations in "MPI Architectural Painting Specification Manual" applicable to substrates indicated.

B. Remove hardware, covers, plates, and similar items already in place that are removable and are not to be painted. If removal is impractical or impossible because of size or weight of item, provide surface-applied protection before surface preparation and painting.

1. After completing painting operations, use workers skilled in the trades involved to reinstall items that were removed. Remove surface-applied protection.

C. Clean substrates of substances that could impair bond of coatings, including dust, dirt, oil, grease, and incompatible paints and encapsulants.

1. Remove incompatible primers and reprime substrate with compatible primers or apply tie coat as required to produce coating systems indicated.

D. Masonry Substrates: Remove efflorescence and chalk. Do not coat surfaces if moisture content or alkalinity of surfaces or if alkalinity of mortar joints exceed that permitted in manufacturer's written instructions.

1. Clean surfaces with pressurized water. Use pressure range of 100 to 600 psi at 6 to 12 inches.

3.3 APPLICATION

A. Apply high-performance coatings according to manufacturer's written instructions and recommendations in "MPI Architectural Painting Specification Manual."

1. Use applicators and techniques suited for coating and substrate indicated.
2. Coat surfaces behind movable equipment and furniture same as similar exposed surfaces. Before final installation, coat surfaces behind permanently fixed equipment or furniture with prime coat only.
3. Coat back sides of access panels, removable or hinged covers, and similar hinged items to match exposed surfaces.
4. Do not apply coatings over labels of independent testing agencies or equipment name, identification, performance rating, or nomenclature plates.

B. Tint each undercoat a lighter shade to facilitate identification of each coat if multiple coats of the same material are to be applied. Tint undercoats to match color of finish coat, but provide sufficient difference in shade of undercoats to distinguish each separate coat.

C. If undercoats or other conditions show through final coat, apply additional coats until cured film has a uniform coating finish, color, and appearance.

D. Apply coatings to produce surface films without cloudiness, spotting, holidays, laps, brush marks, runs, sags, ropiness, or other surface imperfections. Produce sharp glass lines and color breaks.

3.4 FIELD QUALITY CONTROL

A. Dry Film Thickness Testing: Owner will engage the services of a qualified testing and inspecting agency to inspect and test coatings for dry film thickness.

1. Contractor shall touch up and restore coated surfaces damaged by testing.
2. If test results show that dry film thickness of applied coating does not comply with coating manufacturer's written recommendations, Contractor shall pay for testing and apply additional coats as needed to provide dry film thickness that complies with coating manufacturer's written recommendations.

3.5 CLEANING AND PROTECTION

A. At end of each workday, remove rubbish, empty cans, rags, and other discarded materials from Project site.

B. After completing coating application, clean spattered surfaces. Remove spattered coatings by washing, scraping, or other methods. Do not scratch or damage adjacent finished surfaces.

C. Protect work of other trades against damage from coating operation. Correct damage by cleaning, repairing, replacing, and recoating, as approved by Architect, and leave in an undamaged condition.

D. At completion of construction activities of other trades, touch up and restore damaged or defaced coated surfaces.

3.6 INTERIOR HIGH-PERFORMANCE COATING SCHEDULE

A. CMU Substrates:

1. Epoxy-Modified Latex System:

a. Block Filler: Block filler, latex, interior/exterior**, MPI #4**.
b. Intermediate Coat: Epoxy-modified latex, interior, gloss (Gloss Level 6)**, MPI #115**.
c. Topcoat: Epoxy-modified latex, interior, gloss (Gloss Level 6)**, MPI #115**.

B. Gypsum Board Substrates:

1. Epoxy-Modified Latex System:

a. Prime Coat: Primer sealer, latex, interior**, MPI #50**.
b. Intermediate Coat: Epoxy-modified latex, interior, gloss (Gloss Level 6)**, MPI #115**.
c. Topcoat: Epoxy-modified latex, interior, gloss (Gloss Level 6)**, MPI #115**.

END OF SECTION 099600

SECTION 099646 - INTUMESCENT PAINTING

PART 1 - GENERAL

1.1 RELATED DOCUMENTS

A. Drawings and general provisions of the Contract, including General and Supplementary Conditions and Division 01 Specification Sections, apply to this Section.

1.2 SUMMARY

A. Section includes surface preparation and application of fire-retardant intumescent paint to interior items and surfaces.

B. Related Sections:

1. Section 078100 "Applied Fireproofing" for fire-resistance-rated intumescent mastic materials.
2. Section 099123 "Interior Painting" for primers, finish coats, and wood stains that may be used with intumescent paint finishes.

1.3 ACTION SUBMITTALS

A. Product Data: For each type of product indicated.

B. HPBS Submittals:

1. Product Data for Section 16a-38k-5(d): For interior paints and coatings, documentation including printed statement of VOC content.

C. Samples: For each type of coating system and each color and gloss of intumescent paint finish indicated.

1. Submit Samples on rigid backing, not less than 8 inches square.
2. Step coats on Samples to show each coat required for system.
3. Label each coat of each Sample.
4. Label each Sample for location and application area.

1.4 INFORMATIONAL SUBMITTALS

A. Material Test Reports: For each intumescent paint.

1.5 MAINTENANCE MATERIAL SUBMITTALS

A. Furnish extra materials that are from same production run (batch mix) as materials applied and that are packaged with protective covering for storage and identified with labels describing contents.

1. Quantity: Furnish an additional five percent (5%) of each color applied, but not less than 1 gallon of each material and color applied.

1.6 QUALITY ASSURANCE

A. Source Limitations: Obtain each paint system from single source from single manufacturer or provide a system approved in writing by intumescent paint manufacturer.

B. Surface-Burning Characteristics: As determined by testing identical products according to ASTM E 84 by a qualified testing agency. Identify products with appropriate markings of applicable testing agency.

1. Flame-Spread Index: 25 or less.
2. Smoke-Developed Index: 450 or less.

C. MPI Standards: Comply with indicated requirements for the following:

1. Products: MPI standards indicated and listed in "MPI Approved Products List."
2. Preparation and Workmanship: "MPI Architectural Painting Specification Manual" for products and paint systems indicated.

D. Mockups: Apply benchmark Samples of paint system indicated and of each color and finish selected to verify preliminary selections made under Sample submittals and to demonstrate aesthetic effects and set quality standards for materials and execution.

1. Architect will select one (1) actual substrate of each type to represent surfaces and conditions for application of coating.

a. Wall Surfaces: Prepare Samples of at least 100 sq. ft.

2. Apply benchmark Samples after permanent lighting and other environmental services have been activated.
3. Final approval of color selections will be based on benchmark Samples.

a. If preliminary color selections are not approved, apply benchmark Samples of additional colors selected by Architect at no added cost to Owner.

1.7 DELIVERY, STORAGE, AND HANDLING

A. Store materials not in use in tightly covered containers in well-ventilated areas with ambient temperatures continuously maintained at not less than 45 deg F (7 deg C).

1. Maintain containers in clean condition, free of foreign materials and residue.
2. Remove rags and waste from storage areas daily.

1.8 PROJECT CONDITIONS

A. Apply waterborne intumescent paints only when temperatures of surfaces to be painted and ambient air temperatures are between 50 and 90 deg F (10 and 32 deg C).

B. Do not apply intumescent paints in snow, rain, fog, or mist; when relative humidity exceeds eighty-five percent (85%); at temperatures less than 5 deg F (3 deg C) above the dew point; or to damp or wet surfaces.

C. Allow wet surfaces to dry thoroughly and to attain temperature and conditions specified before starting or continuing coating operation.

PART 2 - PRODUCTS

2.1 INTUMESCENT PAINT MATERIALS, GENERAL

A. Material Compatibility:

1. Provide materials for use within each paint system that are compatible with one another and substrates indicated, under conditions of service and application as demonstrated by manufacturer, based on testing and field experience.
2. For each material or coat, provide products and spreading rates recommended in writing by intumescent paint manufacturer for use on substrate indicated. Comply with requirements for fire-retardant coating classification and surface-burning characteristics indicated.

B. VOC Content: Products shall comply with VOC limits of authorities having jurisdiction and, for interior paints and coatings applied at Project site, the following VOC limits, exclusive of colorants added to a tint base, when calculated according to 40 CFR 59, Subpart D (EPA Method 24).

1. Flat Paints and Coatings: 50 g/L.
2. Nonflat Paints and Coatings: 150 g/L.
3. Primers, Sealers, and Undercoaters: VOC not more than 200 g/L.
4. Anticorrosive and Antirust Paints Applied to Ferrous Metals: 250 g/L.
5. Clear Wood Finishes, Varnishes: VOC not more than 350 g/L.
6. Shellacs, Clear: 730 g/L.
7. Shellacs, Pigmented: 550 g/L.

C. Colors and Gloss: As selected by Architect and Owner from manufacturer's full range if not specified in Section 090000 “Schedule of Finishes”.

2.2 INTERIOR, PIGMENTED, INTUMESCENT PAINT SYSTEM

A. Primer: Intumescent paint manufacturer's recommended primer compatible with substrate and other materials indicated.

1. Products: Subject to compliance with requirements, available products that may be incorporated into the Work include, but are not limited to, the following:

a. Albi Manufacturing, a division of StanChem, Inc.; **Albi 490W**
b. Nullfire, a brand of Tremco Illbruck Coatings Ltd.; **primer approved by manufacturer**
c. Shield Industries, Inc.; **primer approved by manufacturer**
d. NoFire Technologies, Inc.; **primer approved by manufacturer**
e. Substitutions: Under provisions of Section 012500 “Substitution Procedures”.

B. Fire-Retardant Intumescent Paint: Water-based, latex-type, fire-retardant paint for combustible surfaces**; MPI #64**.

1. Products: Subject to compliance with requirements, available products that may be incorporated into the Work include, but are not limited to, the following:

    a. Albi Manufacturing, a division of StanChem, Inc; **Albi-Clad TF**
    b. Nullfire, a brand of Tremco Illbruck Coatings Ltd.; **SC902**
    c. Shield Industries, Inc.; **ForceField FireGuard E-84**
    d. NoFire Technologies, Inc; **A-18**
    e. Substitutions: Under provisions of Section 012500 “Substitution Procedures”.

C. Topcoat/Overcoat: Water-based, latex-type, pigmented, fire-inert, protective-finish coating that will not affect fire-retardant class of intumescent coating**; MPI #67**.

1. Products: Subject to compliance with requirements, available products that may be incorporated into the Work include, but are not limited to, the following:

    a. Albi Manufacturing, a division of StanChem, Inc; **latex-based coating approved by manufacturer**
    b. Nullfire, a brand of Tremco Illbruck Coatings Ltd.; **latex-based coating approved by manufacturer**
    c. Shield Industries, Inc.; **latex-based coating approved by manufacturer**
    d. NoFire Technologies, Inc; **latex-based coating approved by manufacturer**
    e. Substitutions: Under provisions of Section 012500 “Substitution Procedures”.

PART 3 - EXECUTION

3.1 EXAMINATION

A. Examine substrates and conditions, with Applicator present, for compliance with manufacturer's requirements for surface treatments, shop-primed surfaces, maximum moisture content, and other conditions affecting performance of the Work.

B. Verify suitability of substrates, including surface conditions, and compatibility with existing finishes and primers.

C. Begin coating application only after unsatisfactory conditions have been corrected and surfaces are dry.

3.2 PREPARATION

A. Comply with manufacturer's written instructions and recommendations in the "MPI Architectural Painting Specification Manual" applicable to substrates and coating systems indicated.

B. Remove hardware and hardware accessories, plates, machined surfaces, light fixtures, and similar items already installed that are not to be coated. If removal is impractical or impossible because of size or weight of item, provide surface-applied protection before surface preparation and coating.

1. After completing coating operations, use workers skilled in the trades involved to reinstall items that were removed. Remove surface-applied protection if any.

C. Clean substrates of substances, including dirt, oil, grease, and incompatible paints and encapsulants, that could impair bond of coatings. Do not coat surfaces if surface moisture content or alkalinity exceeds that permitted in manufacturer's written instructions.

1. Remove incompatible primers, and reprime substrate with compatible primers as required to produce coating systems indicated.
2. Perform cleaning and coating application so dust and other contaminants from cleaning process will not fall on wet, newly coated surfaces.

3.3 APPLICATION

A. General: Apply intumescent paints according to manufacturer's written instructions and to comply with requirements for fire-retardant coating classification.

1. Use equipment and techniques best suited for substrate and type of material being applied.
2. Coat surfaces behind movable items the same as similar exposed surfaces.
3. Apply each coat separately according to manufacturer's written instructions.

B. Apply coatings to prepared surfaces as soon as practical after preparation and before subsequent surface soiling or deterioration.

C. Apply coatings to produce surface films without cloudiness, spotting, holidays, laps, brush marks, roller tracking, runs, sags, ropiness, or other surface imperfections. Cut in sharp lines and color breaks.

1. Pigmented Finishes: If undercoats or other conditions show through pigmented topcoat/overcoat, apply additional coats until cured film has a uniform paint finish, color, and appearance.

3.4 CLEANING AND PROTECTION

A. At end of each workday, remove rubbish, empty cans, rags, and other discarded materials from Project site.

B. After completing coating application, clean spattered surfaces. Remove spattered coatings by washing, scraping, or other methods. Do not scratch or damage adjacent finished surfaces.

C. Protect work of other trades against damage from coating application. Correct damage to work of other trades by cleaning, repairing, replacing, and refinishing, as approved by Architect, and leave in an undamaged condition.

D. At completion of construction activities, touch up and restore damaged or defaced coated surfaces.

3.5 PAINT SYSTEM SCHEDULE

A. Prime Coat: If required and approved by intumescent paint manufacturer.

B. Fire-Retardant Intumescent Coating: Minimum one (1) coat to comply with requirements for fire-retardant coating classification and surface-burning characteristics indicated.

C. Topcoat/Overcoat: Apply if required or recommended and approved by intumescent paint manufacturer.

END OF SECTION 099646

SECTION 101100 - VISUAL DISPLAY UNITS

PART 1 - GENERAL

1.1 RELATED DOCUMENTS

A. Drawings and general provisions of the Contract, including General and Supplementary Conditions and Division 01 Specification Sections, apply to this Section.

1.2 SUMMARY

A. Section Includes:

1. Markerboards.
2. Tackboards.
3. Support systems for visual display boards.

1.3 DEFINITIONS

A. Tackboard: Framed or unframed, tackable, visual display board assembly.

B. Visual Display Board Assembly: Visual display surface that is factory fabricated into composite panel form, either with or without a perimeter frame; includes chalkboards, markerboards, and tackboards.

C. Visual Display Surface: Surfaces that are used to convey information visually, including surfaces of chalkboards, markerboards, tackboards, and surfacing materials that are not fabricated into composite panel form but are applied directly to walls.

1.4 ACTION SUBMITTALS

A. Product Data: For each type of product indicated.

B. HPBS Submittals:

1. Product Data for Section 16a-38k-5(d): For adhesives, documentation including printed statement of VOC content.
2. Product Data for Section 16a-38k-6(b)(4): For composite wood products, documentation indicating that the product contains no urea formaldehyde.

C. Shop Drawings: For visual display surfaces. Include plans, elevations, sections, details, and attachments to other work.

1. Show locations of panel joints.
2. Show locations of special-purpose graphics for visual display surfaces.
3. Include sections of typical trim members.

D. Samples: For each type of visual display surface indicated, for units with factory-applied color finishes, and as follows:

1. Actual sections of porcelain-enamel face sheet and tackboard assembly.
2. Fabric swatches of vinyl-fabric-faced tack assemblies.
3. Include accessory Samples to verify color selected.

1.5 INFORMATIONAL SUBMITTALS

A. Product Test Reports: Based on evaluation of comprehensive tests performed by a qualified testing agency, for surface-burning characteristics of fabrics.

B. Warranties: Sample of special warranties.

1.6 QUALITY ASSURANCE

A. Source Limitations: Obtain visual display surfaces from single source from single manufacturer.

B. Surface-Burning Characteristics: As determined by testing identical products according to ASTM E 84 by a qualified testing agency. Identify products with appropriate markings of applicable testing agency.

1. Flame-Spread Index: 25 or less.
2. Smoke-Developed Index: 50 or less.

1.7 DELIVERY, STORAGE, AND HANDLING

A. Deliver factory-built visual display surfaces, completely assembled in one (1) piece without joints, where possible. If dimensions exceed maximum manufactured panel size, provide two (2) or more pieces of equal length as acceptable to Architect. When overall dimensions require delivery in separate units, prefit components at the factory, disassemble for delivery, and make final joints at the site.

B. Store visual display surfaces vertically with packing materials between each unit.

1.8 PROJECT CONDITIONS

A. Environmental Limitations: Do not deliver or install visual display surfaces until spaces are enclosed and weathertight, wet work in spaces is complete and dry, work above ceilings is complete, and temporary HVAC system is operating and maintaining ambient temperature and humidity conditions at occupancy levels during the remainder of the construction period.

1.9 WARRANTY

A. Special Warranty for Porcelain-Enamel Face Sheets: Manufacturer's standard form in which manufacturer agrees to repair or replace porcelain-enamel face sheets that fail in materials or workmanship within specified warranty period.

1. Failures include, but are not limited to, the following:

a. Surfaces lose original writing and erasing qualities.
b. Surfaces exhibit crazing, cracking, or flaking.

2. Warranty Period: Life of the building.

PART 2 - PRODUCTS

2.1 MATERIALS, GENERAL

A. Porcelain-Enamel Face Sheet: Manufacturer's standard steel sheet with porcelain-enamel coating fused to steel; uncoated thickness indicated.

1. Matte Finish: Low reflective; chalk wipes clean with dry cloth or standard eraser.

B. Natural Cork Sheet: Seamless, single-layer, compressed fine-grain cork sheet; bulletin board quality; face sanded for natural finish with surface-burning characteristics indicated.

C. Hardboard: ANSI A135.4, tempered.

D. Extruded Aluminum: ASTM B 221, Alloy 6063.

2.2 MARKERBOARD ASSEMBLIES

A. Porcelain-Enamel Markerboards: Balanced, high-pressure, factory-laminated markerboard assembly of three-ply construction consisting of backing sheet, core material, and 0.021-inch-thick, porcelain-enamel face sheet with high or low-gloss finish.

1. Basis of Design:

a. Claridge Products and Equipment, Inc.; **LCS**

2. Manufacturers: Subject to compliance with requirements, available manufacturers offering products that may be incorporated into the Work include, but are not limited to, the following:

a. AARCO Products, Inc.
b. ADP Lemco, Inc.
c. Substitutions: Under provisions of Section 012500 “Substitution Procedures”.

3. Hardboard Core: ¼ inch thick; with 0.005-inch-thick, aluminum foil backing.
4. Laminating Adhesive: Manufacturer's standard, moisture-resistant thermoplastic type.

2.3 TACKBOARD ASSEMBLIES

A. Basis of Design:

1. Forbo Flooring Systems; **Bulletin Board**

B. Manufacturers: Subject to compliance with requirements, available manufacturers offering products that may be incorporated into the Work include, but are not limited to, the following:

1. AARCO Products, Inc.
2. Substitutions: Under provisions of Section 012500 “Substitution Procedures”.

C. Natural-Cork Tackboard: ¼-inch-thick, natural cork sheet factory laminated to ¼-inch-thick hardboard backing.

2.4 MARKERBOARD AND TACKBOARD ACCESSORIES

A. Aluminum Frames and Trim: Fabricated from not less than 0.062-inch-thick, extruded aluminum; of size and shape indicated on Drawings.

1. Factory-Applied Trim: Manufacturer's standard.

B. Chalktray: Manufacturer's standard, continuous.

1. Box Type: Extruded aluminum with slanted front, grooved tray, and cast-aluminum end closures.

C. Map Rail: Provide the following accessories:

1. Display Rail: Continuous and integral with map rail; fabricated from cork approximately 1 to 2 inches wide.
2. End Stops: Located at each end of map rail.
3. Map Hooks and Clips: Two (2) map hooks with flexible metal clips for every 48 inches of map rail or fraction thereof.
4. Flag Holder: One (1) for each room.

2.5 FABRICATION

A. Porcelain-Enamel Visual Display Assemblies: Laminate porcelain-enamel face sheet and backing sheet to core material under heat and pressure with manufacturer's standard flexible, waterproof adhesive.

B. Visual Display Boards: Factory assemble visual display boards unless otherwise indicated.

1. Where factory-applied trim is indicated, trim shall be assembled and attached to visual display boards at manufacturer's factory before shipment.

C. Factory-Assembled Visual Display Units: Coordinate factory-assembled units with trim and accessories indicated. Join parts with a neat, precision fit.

1. Make joints only where total length exceeds maximum manufactured length. Fabricate with minimum number of joints, balanced around center of board, as acceptable to Architect.
2. Provide manufacturer's standard vertical-joint spline system between abutting sections of markerboards.
3. Provide manufacturer's standard mullion trim at joints between markerboards and tackboards of combination units.
4. Where size of visual display boards or other conditions require support in addition to normal trim, provide structural supports or modify trim as indicated or as selected by Architect from manufacturer's standard structural support accessories to suit conditions indicated.

D. Aluminum Frames and Trim: Fabricate units straight and of single lengths, keeping joints to a minimum. Miter corners to a neat, hairline closure.

1. Where factory-applied trim is indicated, trim shall be assembled and attached to visual display units at manufacturer's factory before shipment.

2.6 GENERAL FINISH REQUIREMENTS

A. Comply with NAAMM's "Metal Finishes Manual for Architectural and Metal Products" for recommendations for applying and designating finishes.

B. Protect mechanical finishes on exposed surfaces from damage by applying a strippable, temporary protective covering before shipping.

C. Appearance of Finished Work: Noticeable variations in same piece are not acceptable. Variations in appearance of adjoining components are acceptable if they are within the range of approved Samples and are assembled or installed to minimize contrast.

2.7 ALUMINUM FINISHES

A. Clear Anodic Finish: AAMA 611, AA-M12C22A31, Class II, 0.010 mm or thicker.

2.8 VISUAL DISPLAY SURFACE SCHEDULE

A. Visual Display Board: Factory assembled.

1. Markerboard: Porcelain-enamel markerboard assembly.

a. Color: As selected by Architect and Owner from full range of industry colors.

2. Corners: Square.
3. Size and Mounting Height: As indicated on Drawings.
4. Mounting: Wall.
5. Factory-Applied Aluminum Trim: Manufacturer's standard with clear anodic finish.
6. Accessories:

a. Chalktray: Box type.
b. Map rail with display rail, end stops, map hooks and clips and flag holder.

B. Tackboard: Factory assembled.

1. Tack Surface: Plastic-impregnated-cork tackboard assembly.

a. Color: As indicated in Section 090000 “Schedule of Finishes”.

2. Corners: Square.
3. Size and Mounting Height: As indicated on Drawings.
4. Mounting: Wall.
5. Edges: Concealed by trim.

a. Factory-Applied Aluminum Trim: Manufacturer's standard style, with clear anodic finish.

PART 3 - EXECUTION

3.1 EXAMINATION

A. Examine substrates and conditions, with Installer present, for compliance with requirements for installation tolerances, surface conditions of wall, and other conditions affecting performance of the Work.

B. Examine walls and partitions for proper preparation and backing for visual display surfaces.

C. Proceed with installation only after unsatisfactory conditions have been corrected.

3.2 PREPARATION

A. Comply with manufacturer's written instructions for surface preparation.

B. Clean substrates of substances that could impair the performance of and affect the smooth, finished surfaces of visual display boards, including dirt, mold, and mildew.

C. Prepare surfaces to achieve a smooth, dry, clean surface free of flaking, unsound coatings, cracks, defects, projections, depressions, and substances that will impair bond between visual display surfaces and wall surfaces.

3.3 INSTALLATION, GENERAL

A. General: Install visual display surfaces in locations and at mounting heights indicated on Drawings. Keep perimeter lines straight, level, and plumb. Provide grounds, clips, backing materials, adhesives, brackets, anchors, trim, and accessories necessary for complete installation.

3.4 INSTALLATION OF FACTORY-FABRICATED VISUAL DISPLAY BOARDS AND ASSEMBLIES

A. Visual Display Boards: Attach concealed clips, hangers, and grounds to wall surfaces and to visual display boards with fasteners at not more than 16 inches o.c. Secure both top and bottom of boards to walls.

3.5 CLEANING AND PROTECTION

A. Clean visual display surfaces according to manufacturer's written instructions. Attach one (1) cleaning label to visual display surface in each room.

B. Touch up factory-applied finishes to restore damaged or soiled areas.

C. Cover and protect visual display surfaces after installation and cleaning.

END OF SECTION 101100

SECTION 101200 - DISPLAY CASES

PART 1 - GENERAL

1.1 RELATED DOCUMENTS

A. Drawings and general provisions of the Contract, including General and Supplementary Conditions and Division 01 Specification Sections, apply to this Section.

1.2 SUMMARY

A. Section Includes:

1. Bulletin boards.
2. Display cases.

B. Related Requirements:

1. [**Section 062023 "Interior Finish Carpentry"**] [**Section 064113 "Wood-Veneer-Faced Architectural Cabinets"**] for custom wood [**bulletin boards**] [**and**] [**display cases**].
2. Section 097723 "Fabric-Wrapped Panels" for tackable, fabric-covered wall panels.
3. Section 101100 "Visual Display Units" for tackboards.
4. Section 101300 "Directories" for boards with changeable messages or changeable letters and for bulletin boards within built-in directories.

1.3 DEFINITIONS

A. Bulletin Board: Glazed cabinet with tackboard panel, without shelves, typically of shallow depth for display of paper documents.

B. Display Case: Glazed cabinet with [**tackboard panel back surface and**] adjustable shelves.

C. Tackboard Panel: A material for holding push-pins or tacks typically consisting of a facing; such as fabric, vinyl, or cork; adhered to a substrate; such as fiberboard, hardboard, particleboard.

1.4 PREINSTALLATION MEETINGS

A. Preinstallation Conference: Conduct conference at [**Project site**] <**Insert location**>.

1.5 ACTION SUBMITTALS

A. Product Data: For each type of product.

1. Include construction details, material descriptions, dimensions of individual components and profiles, and finishes for [**display cases**] [**and**] [**bulletin boards**]. Include furnished specialties and accessories.
2. Include electrical characteristics for illuminated [**display cases**] [**and**] [**bulletin boards**].

B. LEED Submittals:

1. Product Data for Credit IEQ 4.4: For composite wood products used in [**display cases**] [**and**] [**bulletin boards**], documentation indicating that the product contains no urea formaldehyde.
2. Laboratory Test Reports for Credit IEQ 4.1: For adhesives, documentation indicating that products comply with the testing and product requirements of the California Department of Public Health's (formerly, the California Department of Health Services') "Standard Method for the Testing and Evaluation of Volatile Organic Chemical Emissions from Indoor Sources Using Environmental Chambers."
3. Product Data for Credit IEQ 4.4: For composite wood products, documentation indicating that the product contains no urea formaldehyde.
4. Laboratory Test Reports for Credit IEQ 4.4: For composite wood products used in [**display cases**] [**and**] [**bulletin boards**], documentation indicating that products comply with the testing and product requirements of the California Department of Public Health's (formerly, the California Department of Health Services') "Standard Method for the Testing and Evaluation of Volatile Organic Chemical Emissions from Indoor Sources Using Environmental Chambers."

C. Shop Drawings: For [**display cases**] [**and**] [**bulletin boards**].

1. Include plans, elevations, sections, and attachment details.
2. Show location of seams and joints in tackboard panels.
3. Include sections of typical trim members.
4. Include diagrams for wiring of illuminated [**display cases**] [**and**] [**bulletin boards**].

D. Samples: For each exposed product and for each color and texture specified; not less than 8-1/2 by 11 inches (215 by 280 mm) for tackboard panels and 6 inches (150 mm) long for trim with factory finish.

E. Samples for Initial Selection: For each type of exposed finish.

1. Include Samples of tackboard panels[**, header panel**] and factory-finished trim involving color finish selection.

F. Samples for Verification: For each type of exposed finish for the following.

1. Tackboard Panel: Not less than 8-1/2 by 11 inches (215 by 280 mm), with facing and substrate indicated for final Work. Include one panel for each type, color, and texture required.
2. Trim: 6-inch- (150-mm-) long sections of each trim profile[**including corner section**].

1.6 INFORMATIONAL SUBMITTALS

A. Product Test Reports: For [**fabrics**] [**tackboard panels**], for tests performed by a qualified testing agency.

1.7 CLOSEOUT SUBMITTALS

A. Maintenance Data: For [**display cases**] [**and**] [**bulletin boards**] to include in maintenance manuals.

1.8 PROJECT CONDITIONS

A. Environmental Limitations: Do not deliver or install [**display cases**] [**and**] [**bulletin boards**] for indoor installations until spaces are enclosed and weathertight, wet-work in spaces is complete and dry, work above ceilings is complete, and temporary HVAC system is operating and maintaining ambient temperature and humidity conditions at occupancy levels during the remainder of the construction period.

B. Field Measurements: Verify actual dimensions of openings for [**display cases**] [**and**] [**bulletin boards**] by field measurements before fabrication.

PART 2 - PRODUCTS

2.1 MANUFACTURERS

A. Source Limitations: Obtain [**display cases**] [**and**] [**bulletin boards**] from single source from single manufacturer.

2.2 PERFORMANCE REQUIREMENTS

A. Surface-Burning Characteristics: Comply with ASTM E 84; testing by a qualified testing agency. Identify products with appropriate markings of applicable testing agency.

1. Flame-Spread Index: [**25**] <**Insert value**> or less.
2. Smoke-Developed Index: [**50**] [**450**] <**Insert value**> or less.

B. Electrical Components: Listed and labeled as defined in NFPA 70, by a qualified testing agency, and marked for intended location and application.

2.3 BULLETIN BOARD <**Insert drawing designation**>

A. Manufacturers: Subject to compliance with requirements, [**provide products by the following**] [**provide products by one of the following**] [**available manufacturers offering products that may be incorporated into the Work include, but are not limited to, the following**]:

B. Basis-of-Design Product: Subject to compliance with requirements, provide [**product indicated on Drawings**] <**Insert manufacturer's name; product name or designation**> or comparable product by one of the following:

1. A-1 Visual Systems.
2. AARCO Products, Inc.
3. ADP Lemco, Inc.
4. APCO Graphics, Inc.
5. Architectural School Products Ltd.
6. Aristocrat Industries, Inc.
7. Aywon.
8. Best-Rite Manufacturing; A brand division of MooreCo, Inc.
9. Claridge Products and Equipment, Inc.
10. C. R. Laurence Co., Inc.
11. Ghent Manufacturing, Inc.
12. Marsh Industries, Inc.; Visual Products Group.
13. Nelson-Harkins Industries.
14. Newline Products, Inc.
15. Peter Pepper Products, Inc.
16. Platinum Visual Systems; a division of ABC School Equipment, Inc.
17. Poblocki Sign Company.
18. Sign International Inc.
19. Signature, Inc.
20. Swingframe Mfg; a division of Access Display Group, Inc.
21. Tablet & Ticket Co. (The).
22. Visiontron Corp.
23. Vomar Products, Inc.
24. Waddell Furniture; a division of Ghent Manufacturing, Inc.
25. <**Insert manufacturer's name**>.

C. General: Factory-fabricated unit consisting of manufacturer's standard wall-mounted cabinet with tackboard panel on back inside surface and operable glazed doors at front.

1. Frame and Cabinet Profile: [**Square**] [**Rounded**] frame section with [**square**] [**rounded**] cabinet corners.
2. Mounting: [**Surface mounted**] [**Recessed**].
3. Size: As indicated on Drawings.
4. Size: [**48 inches (1219 mm)**] <**Insert dimension**> wide by [**36 inches (914 mm)**] <**Insert dimension**> high by [**4 inches (102 mm)**] <**Insert dimension**> deep.

D. Aluminum-Framed Cabinet: Extruded aluminum; with [**clear anodic**] [**color anodic**] [**manufacturer's standard baked-enamel or powder-coat**] finish.

1. Color: [**Light bronze**] [**Medium bronze**] [**Dark bronze**] [**Black**] [**As indicated by manufacturer's designations**] [**Match Architect's sample**] [**As selected by Architect from manufacturer's full range**] <**Insert color**>.

E. Wood-Framed Cabinet: [**Red oak**] [**Maple**] [**Walnut**] [**Manufacturer's standard species**] <**Insert species**> with [**natural lacquered**] [**oiled**] [**stained**] finish.

F. Exterior Bulletin Boards: Aluminum-framed units of weather-resistant construction; with vents to dissipate trapped moisture, weather-resistant tackboard panel, and weather-stripped hinged doors.

G. Glazed Sliding Doors: [**Tempered glass**] [**Clear acrylic sheet**] <**Insert glazing**>; unframed; with extruded-aluminum top and bottom track; supported on nylon or ball-bearing rollers; with plastic top guide and rubber bumpers. Equip each door with ground finger pull and adjustable cylinder lock with two keys.

1. Thickness: Not less than [**5 mm**] [**6 mm**] <**Insert dimension**> thick.
2. Number of Doors: [**One**] [**Two**] [**Three**] [**As indicated on Drawings**] <**Insert number**>.

H. Glazed Hinged Doors: [**Tempered glass**] [**Clear acrylic sheet**] <**Insert glazing**>; set in frame matching cabinet material and finish. Equip each door with full-height continuous hinge and cylinder lock with two keys.

1. Thickness: Not less than [**5 mm**] [**6 mm**] <**Insert dimension**> thick.
2. Number of Doors: [**One**] [**Two**] [**Three**] [**As indicated on Drawings**] <**Insert number**>.

I. Header Panel: [**Nonilluminated; with opaque**] [**Illuminated; with translucent**] acrylic sheet panel set within overall cabinet frame; with matching frame that separates header panel from bulletin board.

1. Graphic Content and Style: Provide header panel copy that complies with requirements indicated on [**Drawings**] [**artwork supplied on electronic media by Architect**] for size, style, spacing, content, height, location, material, and colors of graphics.
2. Color: [**Match Architect's sample**] [**As selected by Architect from full range of industry colors**] <**Insert color**>.

J. Illumination System: Concealed top-lighting system consisting of fluorescent-strip fixtures. Include lamps and internal wiring with single, concealed electrical connection to building system. Coordinate electrical characteristics with power supply provided.

1. Ballasts: Low-temperature, high-power-factor, low-energy, fluorescent lamp ballasts that comply with Certified Ballast Manufacturers Association standards and carry its label.[**Provide exterior ballasts for exterior bulletin boards.**]

   a. Electrical Characteristics: Single-phase, [**120**] [**277**] volts.

K. Back Panel: Manufacturer's standard [**natural-cork**] [**plastic-impregnated-cork**] [**vinyl-fabric-faced**] [**or**] [**polyester-fabric-faced**] tackboard panel.

L. Back Panel: Natural-cork tackboard panel <**Insert designation**>.

M. Back Panel: Plastic-impregnated-cork tackboard panel <**Insert designation**>.

N. Back Panel: Vinyl-fabric-faced tackboard panel <**Insert designation**>.

O. Back Panel: Polyester-fabric-faced tackboard panel <**Insert designation**>.

1. Color: [**As indicated by manufacturer's designations**] [**Match Architect's sample**] [**As selected by Architect from full range of industry colors**] <**Insert color**>.

2.4 DISPLAY CASE <**Insert drawing designation**>

A. Manufacturers: Subject to compliance with requirements, [**provide products by the following**] [**provide products by one of the following**] [**available manufacturers offering products that may be incorporated into the Work include, but are not limited to, the following**]:

B. Basis-of-Design Product: Subject to compliance with requirements, provide [**product indicated on Drawings**] <**Insert manufacturer's name; product name or designation**> or comparable product by one of the following:

1. A-1 Visual Systems.
2. AARCO Products, Inc.
3. ADP Lemco, Inc.
4. Architectural School Products Ltd.
5. Best-Rite Manufacturing; A brand division of MooreCo, Inc.
6. Claridge Products and Equipment, Inc.
7. Ghent Manufacturing, Inc.
8. Nelson-Harkins Industries.
9. Newline Products, Inc.
10. Platinum Visual Systems; a division of ABC School Equipment, Inc.
11. Poblocki Sign Company.
12. Tablet & Ticket Co. (The).
13. Waddell Furniture; a division of Ghent Manufacturing, Inc.
14. <**Insert manufacturer's name**>.

C. Recessed Display Case: Factory-fabricated display case; with finished interior, operable glazed doors at front, and trim on face to cover edge of recessed opening.

1. Display Case Cabinet: [**Extruded aluminum**] [**Hardwood veneer plywood**].

   a. Veneer Species: [**Birch**] [**Maple**] [**Red oak**] [**Walnut**] [**Manufacturer's standard species**] <**Insert species**> with [**natural lacquered**] [**oiled**] [**stained**] finish.

2. Face Frame: Aluminum.
3. Face Frame: [**Wood, species to match interior of cabinet box**] [**Birch**] [**Maple**] [**Red oak**] [**Walnut**] [**Manufacturer's standard hardwood species**] <**Insert species**> with [**natural lacquered**] [**oiled**] [**stained**] finish.
4. Aluminum Finish: [**Clear anodic**] [**Color anodic**] [**Manufacturer's standard baked enamel or powder coat**].

   a. Color: [**Light bronze**] [**Medium bronze**] [**Dark bronze**] [**Black**] [**As indicated by manufacturer's designations**] [**Match Architect's sample**] [**As selected by Architect from manufacturer's full range**] <**Insert color**>.

D. Surface-Mounted Display Case: Factory-fabricated display case; with finished interior, and glazed doors at front.

1. Construction: Hardwood-veneer-plywood bottom panel; glazed side panels; [**hardwood-veneer-plywood**] [**glazed**] top panel; [**aluminum face frame**] [**hardwood face frame**].

   a. Wood and Veneer Species: [**Birch**] [**Maple**] [**Red oak**] [**Walnut**] [**Manufacturer's standard species**] <**Insert species**> with [**natural lacquered**] [**oiled**] [**stained**] finish.

2. Construction: Extruded-aluminum top, bottom, and side panels.
3. Construction: Aluminum frame with glazed top, [**bottom,**]and side panels.
4. Construction: Hardwood frame; [**birch**] [**maple**] [**red oak**] [**walnut**] [**manufacturer's standard hardwood species**] <**Insert species**> with [**natural lacquered**] [**oiled**] [**stained**] finish; glazed top, [**bottom**] and side panels.
5. Aluminum Finish: [**Clear anodic**] [**Color anodic**] [**Manufacturer's standard baked enamel or powder coat**].

   a. Color: [**Light bronze**] [**Medium bronze**] [**Dark bronze**] [**Black**] [**As indicated by manufacturer's designations**] [**Match Architect's sample**] [**As selected by Architect from manufacturer's full range**] <**Insert color**>.

6. Display Case Base: [**No base, for wall mounting**] [**Legs, to match construction of frame**] [**Full-height display case, with minimal base**] [**Manufacturer's standard hardwood-plywood-veneer base, in species to match display case interior**].

E. Glazed Sliding Doors: Tempered glass; unframed; with extruded-aluminum top and bottom track; supported on nylon or ball-bearing rollers; with plastic top guide and rubber bumpers. Equip each door with ground finger pull and adjustable cylinder lock with two keys.

1. Thickness: Not less than [**5 mm**] [**6 mm**] <**Insert dimension**> thick.
2. Number of Doors: [**Two**] [**Three**] [**As indicated on Drawings**] <**Insert number**>.

F. Glazed Hinged Doors: Tempered glass; set in frame matching cabinet material and finish. Equip each door with full-height continuous hinge and cylinder lock with two keys.

1. Thickness: Not less than [**5 mm**] [**6 mm**] <**Insert dimension**> thick.
2. Number of Doors: [**One**] [**Two**] [**Three**] [**As indicated on Drawings**] <**Insert number**>.

G. Shelves: 6-mm-thick tempered glass; supported on adjustable shelf standards and supports.

1. Shelf Depth: [**6 inches (150 mm)**] [**8 inches (200 mm)**] [**10 inches (250 mm)**] [**12 inches (300 mm)**].
2. Number of Shelves: [**Three**] [**As indicated on Drawings**] <**Insert number**>.

H. Adjustable Shelf Standards and Supports: [**BHMA A156.9, B04102; with shelf brackets, B04112; recess mounted in rear surface**] [**BHMA A156.9, B04071; with shelf rests, B04081; mounted on sides**]. Provide standards extending full height of display case.

I. Back Panel: Natural-cork tackboard panel <**Insert designation**>.

J. Back Panel: Plastic-impregnated-cork tackboard panel <**Insert designation**>.

K. Back Panel: Vinyl-fabric-faced tackboard panel <**Insert designation**>.

L. Back Panel: Polyester-fabric-faced tackboard panel <**Insert designation**>.

M. Back Panel: Hardwood veneer to match display case construction.

N. Back Panel: <**Insert type of material**>.

1. Color: [**As indicated by manufacturer's designations**] [**Match Architect's sample**] [**As selected by Architect from manufacturer's full range**] <**Insert color**>.

O. Illumination System: Concealed top-lighting system consisting of fluorescent-strip fixtures. Include lamps and internal wiring with single concealed electrical connection to building system. Coordinate electrical characteristics with power supply provided.

1. Ballasts: Low-temperature, high-power-factor, low-energy, fluorescent lamp ballasts that comply with Certified Ballast Manufacturers Association standards and carry its label.

a. Electrical Characteristics: Single phase, [**120**] [**277**] volts.

P. Size: [**As indicated on Drawings**] [**48 inches (1200 mm)**] wide, by [**60 inches (1500 mm)**] high, by [**8 inches (200 mm)**] [**16 inches (400 mm)**] [**24 inches (600 mm)**] deep.

2.5 TACKBOARD PANELS

A. Natural-Cork Tackboard Panel <**Insert designation**>: 1/16-inch- (1.6-mm-) thick, natural-cork sheet factory laminated to [**3/8-inch- (9.5-mm-) thick**] [**7/16-inch- (11-mm-) thick**] fiberboard backing.

B. Natural-Cork Tackboard Panel <**Insert designation**>: 1/8-inch- (3-mm-) thick, natural-cork sheet factory laminated to 3/8-inch- (9.5-mm-) thick fiberboard backing.

C. Natural-Cork Tackboard Panel <**Insert designation**>: 1/4-inch- (6-mm-) thick, natural-cork sheet factory laminated to 1/4-inch- (6-mm-) thick [**hardboard**] [**particleboard**] backing.

D. Plastic-Impregnated-Cork Tackboard Panel <**Insert designation**>: 1/8-inch- (3-mm-) thick, plastic-impregnated-cork sheet factory laminated to 3/8-inch- (9.5-mm-) thick fiberboard backing.

E. Plastic-Impregnated-Cork Tackboard Panel <**Insert designation**>: 1/4-inch- (6-mm-) thick, plastic-impregnated-cork sheet factory laminated to 1/4-inch- (6-mm-) thick [**hardboard**] [**particleboard**] backing.

F. Vinyl-Fabric-Faced Tackboard Panel <**Insert designation**>: Vinyl fabric factory laminated to [**3/8-inch- (9.5-mm-) thick**] [**7/16-inch- (11-mm-) thick**] [**1/2-inch- (13-mm-) thick**] fiberboard backing.

G. Vinyl-Fabric-Faced Tackboard Panel <**Insert designation**>: 1/16-inch- (1.6-mm-) thick, vinyl-fabric-faced-cork sheet factory laminated to 3/8-inch- (9.5-mm-) thick fiberboard backing.

H. Vinyl-Fabric-Faced Tackboard Panel <**Insert designation**>: 1/8-inch- (3-mm-) thick, vinyl-fabric-faced-cork sheet factory laminated to 3/8-inch- (9.5-mm-) thick fiberboard backing.

I. Vinyl-Fabric-Faced Tackboard Panel <**Insert designation**>: 1/4-inch- (6-mm-) thick, vinyl-fabric-faced-cork sheet factory laminated to 1/4-inch- (6-mm-) thick [**hardboard**] [**particleboard**] backing.

J. Polyester-Fabric-Faced Tackboard Panel <**Insert designation**>: Polyester fabric factory laminated to [**3/8-inch- (9.5-mm-) thick**] [**1/2-inch- (13-mm-) thick**] fiberboard backing.

K. Polyester-Fabric-Faced Tackboard Panel <**Insert designation**>: 1/16-inch- (1.6-mm-) thick, polyester-fabric-faced-cork sheet factory laminated to 3/8-inch- (9.5-mm-) thick fiberboard backing.

L. Polyester-Fabric-Faced Tackboard Panel <**Insert designation**>: 1/8-inch- (3-mm-) thick, polyester-fabric-faced-cork sheet factory laminated to 3/8-inch- (9.5-mm-) thick fiberboard backing.

M. Polyester-Fabric-Faced Tackboard Panel <**Insert designation**>: 1/4-inch- (6-mm-) thick, polyester-fabric-faced-cork sheet factory laminated to 1/4-inch- (6-mm-) thick [**hardboard**] [**particleboard**] backing.

2.6 MATERIALS

A. Hardboard: ANSI A135.4, tempered.

B. Fiberboard: ASTM C 208.

C. Particleboard: ANSI A208.1, Grade M-1[**.**][**, made with binder containing no urea formaldehyde.**][**, that complies with the testing and product requirements of the California Department of Public Health's (formerly, the California Department of Health Services') "Standard Method for the Testing and Evaluation of Volatile Organic Chemical Emissions from Indoor Sources Using Environmental Chambers."**]

D. Hardwood Plywood: HPVA HP-1[**.**][**, made with adhesive containing no urea formaldehyde.**][**, that complies with the testing and product requirements of the California Department of Public Health's (formerly, the California Department of Health Services') "Standard Method for the Testing and Evaluation of Volatile Organic Chemical Emissions from Indoor Sources Using Environmental Chambers."**]

E. Natural-Cork Sheet: Seamless, single-layer, compressed fine-grain cork sheet; bulletin board quality; face sanded for natural finish.

F. Plastic-Impregnated-Cork Sheet: Seamless, homogeneous, self-sealing sheet consisting of granulated cork, linseed oil, resin binders, and dry pigments that are mixed and calendared onto burlap backing; with washable vinyl finish and integral color throughout.

G. Polyester Fabric: Nondirectional weave, 100 percent polyester; weighing not less than 15 oz./sq. yd. (508 g/sq. m); with flame-spread index of 25 or less when tested according to ASTM E 84.

H. Vinyl Fabric: FS CCC-W-408D, Type II, [**burlap weave**] <**Insert texture and pattern**>; weighing not less than 13 oz./sq. yd. (440 g/sq. m); with flame-spread index of 25 or less when tested according to ASTM E 84.

I. Extruded-Aluminum Bars and Shapes: ASTM B 221 (ASTM B 221M), Alloy 6063.

J. Aluminum Tubing: ASTM B 429/B 429M, Alloy 6063.

K. Clear Tempered Glass: ASTM C 1048, Kind FT, Condition A, Type I, Class 1, Quality Q3, with exposed edges seamed before tempering.

L. Transparent Acrylic Sheet: ASTM D 4802, Category A-1 (cell-cast sheet), with Finish 1 (smooth or polished), colorless sheet with visible light transmittance of 92 percent measured according to ASTM D 1003.

M. Opaque Acrylic Sheet: ASTM D 4802, Category A-1 (cell-cast sheet).

N. Translucent Acrylic Sheet: ASTM D 4802, Category A-1 (cell-cast sheet), with Finish 1 (smooth or polished). Provide white-colored sheet unless otherwise indicated, of density required to produce uniform brightness and minimum halation effects.

O. High-Pressure Plastic Laminate: NEMA LD 3.

P. Fasteners: Provide screws, bolts, and other fastening devices made from same material as items being fastened, except provide hot-dip galvanized, stainless-steel, or aluminum fasteners for exterior applications. Provide types, sizes, and lengths to suit installation conditions. Use security fasteners where exposed to view.

Q. Adhesives: Manufacturer's standard product that complies with the testing and product requirements of the California Department of Public Health's (formerly, the California Department of Health Services') "Standard Method for the Testing and Evaluation of Volatile Organic Chemical Emissions from Indoor Sources Using Environmental Chambers."

2.7 FABRICATION

A. Fabricate [**bulletin boards**] [**and**] [**display cases**] to requirements indicated for dimensions, design, and thickness and finish of materials.

B. Use metals and shapes of thickness and reinforcing required to produce flat surfaces, and to impart strength for size, design, and application indicated.

C. Fabricate cabinets and door frames with reinforced corners, mitered to a hairline fit, with no exposed fasteners.

D. Fabricate shelf standards plumb and at heights to align shelf brackets for level shelves.

2.8 GENERAL FINISH REQUIREMENTS

A. Comply with NAAMM's "Metal Finishes Manual for Architectural and Metal Products" for recommendations for applying and designating finishes.

B. Protect mechanical finishes on exposed surfaces from damage by applying a strippable, temporary protective covering before shipping.

C. Appearance of Finished Work: Noticeable variations in same piece are unacceptable. Variations in appearance of adjoining components are acceptable if they are within the range of approved Samples and are assembled or installed to minimize contrast.

2.9 ALUMINUM FINISHES

A. Clear Anodic Finish: AAMA 611, AA-M12C22A31, Class II, 0.010 mm or thicker.

B. Color Anodic Finish: AAMA 611, AA-M12C22A32/A34, Class II, 0.010 mm or thicker.

C. Baked-Enamel or Powder-Coat Finish: AAMA 2603, except with a minimum dry film thickness of 1.5 mils (0.04 mm). Comply with coating manufacturer's written instructions for cleaning, conversion coating, and applying and baking finish.

PART 3 - EXECUTION

3.1 EXAMINATION

A. Examine walls, with Installer present, for compliance with requirements for installation tolerances, surface conditions of wall, and other conditions affecting performance of the Work.

B. Examine roughing-in for electrical power systems to verify actual locations of connections before installation of illuminated units.

C. Examine walls and partitions for proper backing for [**bulletin boards**] [**and**] [**display cases**].

D. Examine walls and partitions for suitable framing depth if recessed units will be installed.

E. Proceed with installation only after unsatisfactory conditions have been corrected.

3.2 PREPARATION

A. Prepare recesses for display cases as required by type and size of unit.

3.3 INSTALLATION

A. General: Install units in locations and at mounting heights indicated on Drawings, or if not indicated, at heights indicated below. Keep perimeter lines straight, level, and plumb. Provide grounds, clips, backing materials, adhesives, brackets, anchors, trim, and accessories necessary for complete installation.

1. Mounting Height: [**72 inches (1829 mm)**] <**Insert dimension**> above finished floor to top of cabinet.

B. Bulletin Boards: Attach units to wall surfaces with concealed clips, hangers, or grounds.

C. Recessed Display Cases: Attach units to wall framing with fasteners at not more than 16 inches (400 mm) o.c. Attach aluminum trim over edges of recessed display cases and conceal grounds and clips. Attach trim with fasteners at not more than 24 inches (600 mm) o.c.

D. Surface-Mounted Display Cases: Attach units to wall surfaces with concealed clips, hangers, or grounds fastened at not more than 16 inches (400 mm) o.c. Secure tops and bottoms of display cases to walls.

E. Floor-Mounted Display Cases: Attach display cases with [**bases**] [**legs**] to floor with concealed anchors.

F. Comply with requirements specified elsewhere for connecting illuminated [**bulletin boards**] [**and**] [**display cases**].

G. Install display case shelving level and straight.

3.4 ADJUSTING AND CLEANING

A. Adjust doors to operate smoothly without warp or bind and so contact points meet accurately. Lubricate operating hardware as recommended by manufacturer.

B. Touch up factory-applied finishes to restore damaged areas.

END OF SECTION 101200

SECTION 101400 - SIGNAGE

PART 1 - GENERAL

1.1 RELATED DOCUMENTS

A. Drawings and general provisions of the Contract, including General and Supplementary Conditions and Division 01 Specification Sections, apply to this Section.

1.2 SUMMARY

A. This Section includes the following:

1. Panel signs.
2. Dimensional characters.

B. Related Sections include the following:

1. Section 015000 "Temporary Facilities and Controls" for temporary Project identification signs and for temporary information and directional signs.
2. Section 220553 "Identification for Plumbing Piping and Equipment" for labels, tags, and nameplates for plumbing systems and equipment.
3. Section 230553 "Identification for HVAC Piping and Equipment" for labels, tags, and nameplates for HVAC systems and equipment.
4. Section 260553 "Identification for Electrical Systems" for labels, tags, and nameplates for electrical equipment.
5. Section 265100 "Interior Lighting" for illuminated Exit signs.

1.3 DEFINITIONS

A. ADA-ABA Accessibility Guidelines: U.S. Architectural & Transportation Barriers Compliance Board's "Americans with Disabilities Act (ADA) Accessibility Guidelines for Buildings and Facilities; Architectural Barriers Act (ABA) Accessibility Guidelines."

1.4 SUBMITTALS

A. Product Data: For each type of product indicated.

B. Shop Drawings: Show fabrication and installation details for signs.

1. Show sign mounting heights, locations of supplementary supports to be provided by others, and accessories.
2. Provide message list, typestyles, graphic elements, including tactile characters and Braille, and layout for each sign.

C. Samples: Manufacturer's color charts consisting of actual units or sections of units showing the full range of colors available for the following:

1. Acrylic Sheet: 8 by 10 inches for each color required.

2. Aluminum: For each form, finish, and color, on 6-inch-long sections of extrusions and squares of sheet at least 4 by 4 inches.

D. Sign Schedule: Use same designations indicated on Drawings or as listed in special schedule.

E. Qualification Data: For fabricator.

F. Maintenance Data: For signs to include in maintenance manuals.

G. Warranty: Special warranty specified in this Section.

1.5 QUALITY ASSURANCE

A. Fabricator Qualifications: Shop that employs skilled workers who custom-fabricate products similar to those required for this Project and whose products have a record of successful in-service performance.

B. Source Limitations for Signs: Obtain each sign type indicated from one (1) source from a single manufacturer.

C. Regulatory Requirements: Comply with applicable provisions in 2010 ADA-ABA Accessibility Guidelines and ICC/ANSI A117.1.

1.6 PERFORMANCE REQUIREMENTS

A. Sign finish shall comply with the following performance requirements:

1. Durability: Sign finish shall show no effect after repeated use of cleaners.

1.7 PROJECT CONDITIONS

A. Field Measurements: Verify recess openings by field measurements before fabrication and indicate measurements on Shop Drawings.

1.8 COORDINATION

A. Coordinate placement of anchorage devices with templates for installing signs.

1.9 WARRANTY

A. Special Warranty: Manufacturer's standard form in which manufacturer agrees to repair or replace components of signs that fail in materials or workmanship within specified warranty period.

1. Failures include, but are not limited to, the following:

a. Deterioration of metal finishes beyond normal weathering.
b. Deterioration of embedded graphic image colors and sign lamination.

2. Warranty Period: Five (5) years from date of Substantial Completion.

PART 2 - PRODUCTS

2.1 MATERIALS

A. Acrylic Sheet: ASTM D 4802, Category A-1 (cell-cast sheet), Type UVA (UV absorbing).

B. Aluminum Castings: ASTM B 26, of alloy and temper recommended by sign manufacturer for casting process used and for use and finish indicated.

C. Warning Adhesive Tape: Heavy duty nylon or polyester tape specifically intended for floor or wall markings, in red or bright orange color.

2.2 PANEL SIGNS

A. Manufacturers: Subject to compliance with requirements, provide products by one (1) of the following:

1. Best Sign Systems, Inc.
2. Bayuk Graphic Systems, Inc.
3. Intelligent Signage, Inc.
4. Seton Identification Products.
5. Substitutions: Under provisions of Section 012500 “Substitution Procedures”.

B. Interior Panel Signs: Provide smooth sign panel surfaces constructed to remain flat under installed conditions within a tolerance of plus or minus 1/16 inch measured diagonally from corner to corner.

C. Interior Signs: Provide matte finish plaques in sizes to accommodate the message indicated in the Supplemental Schedule below, the Signage Schedule on the Door Schedule and the Signage Details drawing in the Construction Documents. Fabricate of acrylic plastic conforming to ASTM D 709, Type NDP minimum 3/16 inch for non-slotted and 1/8 inch for slotted signs. Provide with rounded corners.

1. Graphics Application:

a. Raised Letters: Chemically weld l/l6 inch thick acrylic message letters to front surface of plaque prior to application of background color to rear of sheet. These shall comply with Section 703.2.3 (not italic, oblique, script or decorative) and 703.2.4 (1 inch character height) of the ICC/ANSI A117.1 Code.
b. Pictogram: Each sign shall be provided with an international symbol of accessibility per Section 4.30.7 (Figure 43 a and b) of the Americans with Disabilities Act. The raised image pictogram shall be placed within the limits of the sign panel insert and to the right of the text.
c. Messages:

1) Typeface: Helvetica Medium, with accompanying Grade 2 Braille message.
2) Type Size: 1 inch large and small case, with width, height and stroke complying with the requirements of Section 703.2.5 (maximum stroke width fifteen percent (15%) of the height of each letter at the top surface of the character and thirty percent (30%) maximum of the height of each letter at the base; character spacing 1/8 inch minimum and four (4) times the tactile

character stroke width maximum and spacing between lines shall be between one hundred thirty-five percent (135%) and one hundred seventy percent (170%) of the tactile character height) of the ICC/ANSI A117.1 Code.

3) Background Color: In color selected by Architect and Owner from manufacturer's full range, except for accessibility pictogram background, which will be blue. Message Color: White.

SUPPLEMENTAL INTERIOR SIGNAGE SCHEDULE

QTY	COPY	DOOR OR ROOM #/LOCATION
	IN EVENT OF EMERGENCY (see attached graphic as representation only, use East Shore MS floor plan)	WHERE INDICATED BY AHJ

See Door Schedule for more and specific signage locations, requirements and text.

D. Changeable Message Inserts: Fabricate signs to allow insertion of changeable messages in the form of slide-in inserts.

1. Furnish insert material and software for creating text and symbols for PC-Windows computers for Owner production of paper inserts.

2.3 DIMENSIONAL CHARACTERS

A. Basis-of-Design Product:

1. As indicated in Section 090000 “Schedule of Finishes”.

B. Manufacturers: Subject to compliance with requirements, available products by one of the following:

1. Advance Corporation; Braille-Tac Division.
2. A. R. K. Ramos.
3. ASI-Modulex, Inc.
4. Gemini Incorporated.
5. Mohawk Sign Systems.
6. Substitutions: Under provisions of Section 012500 “Substitution Procedures”.

C. Cast Characters: Produce characters with smooth flat faces, sharp corners, and precisely formed lines and profiles, free of pits, scale, sand holes, and other defects. Cast lugs into back of characters and tap to receive threaded mounting studs. Alloy and temper recommended by sign manufacturer for casting process used and for use and finish indicated. Comply with the following requirements.

1. Character Material: Aluminum.
2. Color(s): As indicated in Section 090000 “Schedule of Finishes”.
3. Mounting: Concealed studs, noncorroding for substrates encountered.

2.4 ACCESSORIES

A. Anchors and Inserts: Provide nonferrous-metal or hot-dip galvanized anchors and inserts for exterior installations and elsewhere as required for corrosion resistance. Use toothed steel or lead expansion-bolt devices for drilled-in-place anchors. Furnish inserts, as required, to be set into concrete or masonry work.

2.5 FABRICATION

A. General: Provide manufacturer's standard signs of configurations indicated.

1. Mill joints to tight, hairline fit. Form joints exposed to weather to exclude water penetration.
2. Preassemble signs in the shop to greatest extent possible. Disassemble signs only as necessary for shipping and handling limitations. Clearly mark units for reassembly and installation, in location not exposed to view after final assembly.
3. Conceal fasteners if possible; otherwise, locate fasteners where they will be inconspicuous.

2.6 FINISHES, GENERAL

A. Comply with NAAMM's "Metal Finishes Manual for Architectural and Metal Products" for recommendations for applying and designating finishes.

B. Protect mechanical finishes on exposed surfaces from damage by applying a strippable, temporary protective covering before shipping.

C. Appearance of Finished Work: Variations in appearance of abutting or adjacent pieces are acceptable if they are within one-half of the range of approved Samples. Noticeable variations in the same piece are not acceptable. Variations in appearance of other components are acceptable if they are within the range of approved Samples and are assembled or installed to minimize contrast.

2.7 ACRYLIC SHEET FINISHES

A. Colored Coatings for Acrylic Sheet: For copy and background colors, provide colored coatings, including inks, dyes, and paints, that are recommended by acrylic manufacturers for optimum adherence to acrylic surface and that are UV and water resistant for five (5) years for application intended.

2.8 ALUMINUM FINISHES

A. Clear Anodic Finish: Manufacturer's standard Class 1 clear anodic coating, 0.018 mm or thicker, over a satin (directionally textured) mechanical finish, complying with AAMA 611.

PART 3 - EXECUTION

3.1 EXAMINATION

A. Examine substrates, areas, and conditions, with Installer present, for compliance with requirements for installation tolerances and other conditions affecting performance of work.

B. Verify that items, including anchor inserts are sized and located to accommodate signs.

C. Proceed with installation only after unsatisfactory conditions have been corrected.

3.2 INSTALLATION

A. Locate signs and accessories where indicated, using mounting methods of types described and complying with manufacturer's written instructions.

1. Install signs level, plumb, and at heights indicated, with sign surfaces free of distortion and other defects in appearance.
2. Interior Wall Signs: Install signs on walls adjacent to latch side of door where applicable. Where not indicated or possible, such as double doors, install signs on nearest adjacent walls. Locate to allow approach within 3 inches of sign without encountering protruding objects or standing within swing of door.

B. Wall-Mounted Signs: Comply with sign manufacturer's written instructions except where more stringent requirements apply.

1. Silicone-Adhesive Mounting: Attach signs to irregular, porous, or vinyl-covered surfaces.

C. Dimensional Characters: Mount characters using standard fastening methods to comply with manufacturer's written instructions for character form, type of mounting, wall construction, and condition of exposure indicated. Provide heavy paper template to establish character spacing and to locate holes for fasteners.

1. Flush Mounting: Mount characters with backs in contact with wall surface.
2. Projected Mounting: Mount characters at projection distance from wall surface indicated.

D. Tape: Locate warning tapes at areas of refuge and in front of all power panels and hot water heaters to prohibit blocking stored materials, delineating an area 3 feet wide x 3 feet deep in front of the panel, with striping laid at 45 degrees in the box area at 6 inches on center. Install striping adhesive tape mounted to walls above shelving units as specified herein. Cut tape neat for geometric forms and emboss onto the substrate surfaces for an effective bond.

3.3 CLEANING AND PROTECTION

A. After installation, clean soiled sign surfaces according to manufacturer's written instructions. Protect signs from damage until acceptance by Owner.

END OF SECTION 101400

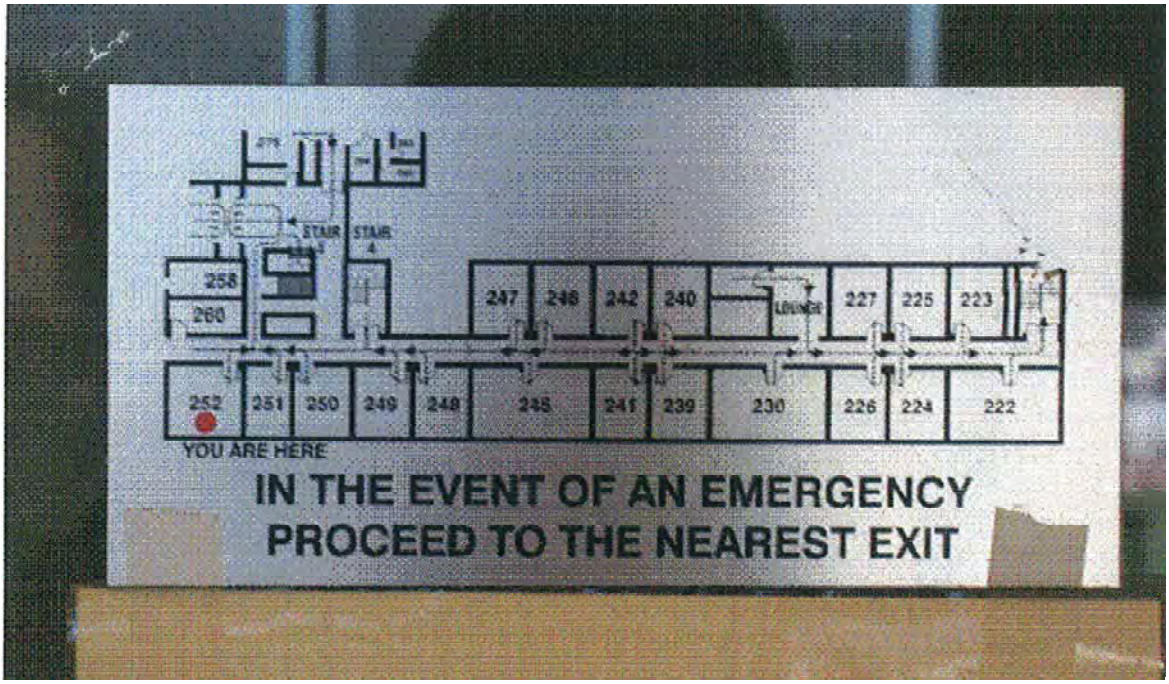
STAIR
STAIR
4
258
260
247
248
242
240
LOUNGE
227
225
223
252
251
250
249
248
245
241
239
230
226
224
222
YOU ARE HERE
IN THE EVENT OF AN EMERGENCY
PROCEED TO THE NEAREST EXIT

SECTION 10 1453 - TRAFFIC SIGNAGE

PART 1 GENERAL

1.1 SUMMARY

A. Section Includes

1. Installation of new signs and sign supports.
2. Removal of existing signs.

B. Contractor shall coordinate work between all Subcontractors, sections, and trades required for the proper completion of the work.

C. Contractor is responsible for all health and safety.

1.2 SUBMITTALS

A. Shop Drawings

1. Submit shop drawings of all work of this Section. Do not order material or begin fabrication until the approval of Engineer has been obtained.
2. Show the size and thickness of all members, types of materials, methods of construction and assembly method and type of surface treatment, complete dimensions, hangers, brackets, anchorage, relationship to surrounding work by other trades, shop finishes, sign designs, layouts, and lettering, and other pertinent details of fabrication and installation.

1.3 REFERENCES

A. Reference herein to any technical society, organization, group or regulation are made in accordance with the following abbreviations and, unless otherwise noted or specified, all work under this Section shall conform to the latest edition as applicable.

B. State of Connecticut Department of Transportation (ConnDOT)

1. Standard Specifications for Roads, Bridges and Incidental Construction, Form 816, 2004 and any supplements.

C. Code of Federal Regulations (CFR)

1. 29 CFR 1926, Safety and Health Regulations for Construction

D. American Society for Testing and Materials (ASTM)

1. ASTM A1 - Standard Specification for Carbon Steel Tee Rails.
2. ASTM A123/A123M - Standard Specification for Zinc (Hot-Dip Galvanized) Coatings on Iron and Steel Products.
3. ASTM A1011/A1011M - Standard Specification for Steel, Sheet and Strip, Hot-Rolled, Carbon, Structural, High-Strength Low-Alloy, High-Strength Low-Alloy with Improved Formability, and Ultra-High Strength.
4. ASTM A354 - Standard Specification for Quenched and Tempered Alloy Steel Bolts, Studs, and Other Externally Threaded Fasteners.

5. ASTM A499 - Standard Specification for Steel Bars and Shapes, Carbon Rolled from T Rails.

6. ASTM A563 - Standard Specification for Carbons and Alloy Steel Nuts.

7. ASTM B209 - Standard Specification for Aluminum and Aluminum-Alloy Sheet and Plate.

8. ASTM B449 - Standard Specification for chromates on Aluminum.

9. ASTM D2729 - Standard Specification for Poly (Vinyl Chloride) (PVC) Sewer Pipe and Fittings.

10. ASTM F1043 - Standard Specification for Strength and Protective Coatings on Steel Industrial Chain Link Fence Framework.

E. American Association of State High and Transportation Officials (AASHTO).

1. Roadside Design Guide, latest edition.

2. Manual for Signing and Pavement Marking of the National System of Interstate and Defense Highways, latest edition.

3. AASHTO M 268 - Standard Specification for Retroreflective Sheeting for Traffic Control.

F. United States Department of Transportation, Federal Highway Administration (FHWA).

1. Manual on Uniform Traffic Control Devices for Streets and Highways (MUTCD), latest edition.

2. Standard Highway Signs Including Pavement Markings and Standard Alphabets, latest edition.

1.4 QUALITY ASSURANCE

A. Use adequate numbers of skilled workmen who are trained and experienced in the necessary crafts and who are completely familiar with the specified requirements and methods required for proper performance of the work in this Section. Use equipment of adequate size, capacity and quantity to accomplish the work of this Section in a timely manner.

1.5 DELIVERY, STORAGE AND HANDLING

A. Deliver and store work under these Sections in a manner to prevent cracking, chipping or stress of the components, and to prevent mechanical damage or damage by the elements.

B. Materials shall be wrapped for shipment and storage, delivered to the jobsite in manufacturer's original packaging, and stored in a clean, dry area in accordance with manufacturer's instructions.

PART 2 PRODUCTS

2.1 GENERAL

A. All signs furnished under this Section shall comply with the Manual on Uniform Traffic Control Devices for Streets and Highways (MUTCD), latest edition.

2.2 SIGN FACE - SHEET ALUMINUM

A. Aluminum sign blanks shall be constructed of sheet aluminum, alloy 6061-T6 or alloy 5052-H38, ASTM B 209.

B. Blanks shall be degreased and etched in accordance with the recommendations of the sheeting manufacturer or treated with a light, tightly adherent chromate conversion coating, free of any powdery residue, ranging in color from silvery iridescent to a pale yellow, ASTM B 449, Class 2 (10-35 milligrams/square foot) with 25 milligrams/square foot as the optimum coating. Thickness shall be as specified on the Drawings.

C. The following thickness and mounting, unless otherwise specified:

Thickness of Sign Face Sheet Aluminum

Area of Sign (Square Feet)	Mounting	ConnDOT Thickness (Inches)	Municipal Thickness (Inches)
Less than 10	Single Post	A	.080
Between 10 and 20	Two Posts	B	.080
Between 6 and 25	Single Post (Top Mounted)	C	.080

D. The fabrication of aluminum sign blanks including cutting to size and shape and the punching of mounting holes shall be completed prior to metal degreasing and the application of reflective sheeting. Aluminum sign blanks shall be free of buckles, warp, dents, cockles, burrs and defects resulting from fabrication.

2.3 REFLECTIVE SHEETING

A. Reflective Sheeting shall meet the requirements of AASHTO M 268. Reflective sheeting for sign panel faces shall meet the requirements of AASHTO M 268 for Type II and/or III as required by the contract documents. Class 1 or 2 adhesive, and color per the FHWA MUTCD and the AASHTO Manual for Signing and Pavement Marking of the National System of Interstate and Defense Highways.

B. Reflective sheeting shall be applied in such a manner that the finished sign will be wrinkle and bubble free. No splices of the reflective sheeting will be permitted on any sign face under 30 square feet in area with one dimension of 4 feet or less and no more than one splice will be permitted on any one sign without the approval of Engineer.

2.4 LEGENDS

A. Permanently Applied Legends

1. Permanently applied legends shall be reflective or opaque sheeting applied directly to clean, dust-free background in a manner specified by the sheeting manufacturer.

2. Heat activated adhesive-coated material shall be applied only by mechanical means.

3. Pressure sensitive, adhesive-coated materials shall be applied only by hand means.

4. Finishes shall be as recommended by and in a manner as specified by the sheeting manufacturer.

5. Legends shall be neatly cut.

2.5 SILK SCREEN PROCESSED

A. The legends shall be of the series and size specified in AASHTO "Manual for Signing and Pavement Marking of the National System of Interstate and Defense Highways", and the dimension and details of the letters with respect to each series shall be as specified in FHWA "Standard Highway Signs Including Pavement Markings and Standard Alphabets", or as shown on the Drawings.

2.6 SIGN SUPPORTS

A. Flanged U-Channel Post.

1. Carbon steel, ASTM A 499 Grade 60 and chemical requirements of ASTM A1.

2. ConnDOT Type "A" post: 3.00 pounds/lf.

3. ConnDOT Type "B" post: 4.00 pounds/lf.

4. Retainer spacer strap: Galvanized steel, ASTM A123. Formed and dimensioned as shown on the Drawings.

5. Post assembled in ConnDOT "breakaway" configuration, Type 1, as indicated on the Drawings. Breakaway feature shall conform to ConnDOT and AASHTO "Roadside Design Guide" and have adequate strength to carry the sign at 60 mile per hour wind loadings.

B. Tubular Post

1. 2.5-inch steel pipe, 3.12 lb/lf, cold formed and welded, ASTM A1011/A1011M, minimum yield strength of 50,000 psi. External surface triple coated per ASTM F1043, Type B & Type D with a minimum of 0.9 ounces of zinc per square foot, a minimum of 15 micrograms of chromate per square inch and high performance polymer top coating with a zinc-rich exterior thickness of not less than 0.3 mils. Internal coating shall be Type B, zinc 0.90 ounces per square foot minimum, or type D, zinc-pigmented, 81% nominal coating with 0.3 mils minimum thickness.

2. Cap: Pressed steel dome, galvanized, ASTM F1043 sized to fit post.

2.7 FASTENERS AND ANCHORS

A. Sign fabricator shall design a complete system of fastenings and anchorage devices for the various signs, as required for attachment to the various supporting structures. These may include, but are not limited to, nuts, bolts, clip systems, face screws, epoxy adhesives, etc. Wherever reasonably possible, fastenings and anchorage devices shall be fully concealed and shall be vandal proof. Contractor is responsible to provide safe and secure installations in strict conformance to the governing laws and building code.

B. Fully describe proposed fastenings and anchorage devices for each sign type on the shop drawings.

C. Bolts: Stainless Steel, Hex head, integral flange, ASTM A354.

1. 5/16 Inch -18 UNC x 1.75 inch, Grade BC for 3.00 pounds/lf U-channel posts.

2. 5/16 Inch -18 UNC x 2.00 inch, Grade BD for 4.00 pounds/lf U-channel posts.

3. 5/16 Inch -18 UNC x 3.00 inch, Grade BC with vandal-resistant head for tubular posts.

D. Nuts: Stainless Steel, hex head, integral flange, ASTM A563.

1. 5/16 Inch -18 UNC, Grade DH.

E. Lockwashers: Stainless steel, split helical spring.

1. 3/8 inch, heavy duty external type.

F. Polyvinyl chloride (PVC) conduit: ASTM D2729, Schedule 40 or Schedule 80.

G. Cold Patch: commercially-available polymer-modified asphalt and stone mixture designed for use at ambient temperatures.

H. Concrete: Portland cement concrete, ASTM C94 with a maximum 3/4" aggregate and having a minimum compressive strength of 3,000 psi at 28 days.

PART 3 EXECUTION

3.1 GENERAL

A. Signs shall be installed in accordance with approved manufacturer's instructions at locations shown on the Drawings.

3.2 REMOVAL OF SIGNS

A. Remove signs, including sign, supports and associated appurtenances, as indicated on the Drawings or as called for in the Specifications.

1. Post shall be removed from the ground, unless the cutting of posts at ground-level is specifically approved by the Engineer in writing.

B. All materials resulting from sign removal shall be removed from the Project Site by Contractor for disposal, reuse, salvage or recycling in accordance with applicable regulations.

3.3 PROTECTION AND TEMPORARY COVERS

A. Completed sign panels shall be properly protected and maintained in good condition, free from dirt, scratches, hand marks or other blemishes. The panels shall be shipped in such a manner as to insure their arrival on the job site in an undamaged condition.

B. Subsequent to erection, if directed by Engineer, exterior signs may be required to be covered until the actual use thereof is desired. Material used to temporarily cover any sign panel shall effectively conceal the message and be non-injurious to the panel, its finish, or its structural integrity.

3.4 INSTALLATION

A. Erection of all work under this Section shall be performed by experienced sign erectors. Signs shall be installed true, plumb, and level, located as shown on the Drawings. No field cutting of any sing work will be allowed. Exercise extreme care in all handling and stacking of signs to avoid chipping. Exact location of signs will be determined by Engineer in the field.

B. All work shall be rigidly anchored to the supporting construction, as indicated on the approved shop drawings.

3.5 ALUMINUM SIGN PANEL

A. Sign panels shall show careful workmanship and present a reasonably plane surface with the message and outlines clear and sharp.

1. Finished sign panels shall be shipped in such manner as to ensure arrival on the Project in undamaged condition, where they shall be properly protected from dirt, scratches, hand-marks and other blemishes until erected and accepted.

B. Reflective sheeting shall be applied to properly treated base panels with mechanical equipment in a manner specified for the manufacture of traffic control signs by the sheeting manufacturer. Heat activated adhesive coating sheeting shall be pre-perforated.

1. No splices shall be allowed on sign panels.

C. When pressure sensitive adhesive coating reflective sheeting is used all sheeting splices and sign edges shall be sealed with materials recommended by and in a manner specified by the sheeting manufacturer.

1. Dry heat activated adhesive coated reflective sheeting when applied to aluminum shall be edge sealed as specified by the sheeting manufacturer.

3.6 REFLECTIVE SHEETING

A. Reflective sheeting shall be applied to properly treated base panels with mechanical equipment in a manner specified by the sheeting manufacturer.

B. Numerals shall be black-die-cut, pre-spaced, conforming to the details on the Contract Drawings and/or Engineer standards. Numerals shall have a pre-coated, pressure-activated adhesive applied as recommended by the manufacturer of the reflective sheeting or be opaque black permanent inks applied on approved high intensity sheeting.

C. Treatment of Aluminum Sign Panels Prior to Application of Reflective Sheeting.

1. Vapor degreasing: By total immersion of the panel in a saturated vapor or trichloroethylene. Trademark printing shall be removed with lacquer thinner or controlled alkaline cleaning system.

2. Alkaline degreasing: By total immersion of the panel in a tank containing alkaline solutions, controlled and titrated to the solution manufacturer’s specification.

3. Rinsing: After satisfactory degreasing, the panels shall be thoroughly washed with running water.

4. Drying: The panel shall be thoroughly dried by use of a forced hot air dryer.

5. Metal shall not be handled between cleaning and etching operation and the application of reflective sheeting, except with devices or clean canvas gloves.

6. Metal shall not come in contact with greases, oils, or other contaminants prior to the application of reflective sheeting.

3.7 CLEAN-UP

A. Surfaces of sign work shall be cleaned as recommended by the sign manufacturer after installation and left in a condition satisfactory to Engineer.

B. All defective work, including that exhibiting cracked, chipped, scratched, abraded, or otherwise damaged finishes, shall be removed and replaced with work conforming to the specified requirements.

3.8 ERECTION OF POSTS

A. Posts shall be installed in conformance with details shown on the Drawings or as otherwise required by the State of Connecticut or Local Traffic Authority.

B. Posts shall be driven a minimum of three (3) feet into firm ground or shall be anchored in concrete in accordance with Engineer requirements.

C. Bottom of all signs shall be the minimum height above existing ground in accordance with the Drawings, State of Connecticut, MUTCD, or the Local Traffic Authority.

END OF SECTION

SECTION 102113 - TOILET COMPARTMENTS

PART 1 - GENERAL

1.1 RELATED DOCUMENTS

A. Drawings and general provisions of the Contract, including General and Supplementary Conditions and Division 01 Specification Sections, apply to this Section.

1.2 SUMMARY

A. Section Includes:

1. Solid-polymer toilet compartments configured as toilet enclosures and urinal screens.

B. Related Sections:

1. Division 10 Section "Toilet, Bath, and Laundry Accessories" for toilet tissue dispensers, grab bars, purse shelves, and similar accessories.

1.3 ACTION SUBMITTALS

A. Product Data: For each type of product indicated. Include construction details, material descriptions, dimensions of individual components and profiles, and finishes.

B. Shop Drawings: For toilet compartments. Include plans, elevations, sections, details, and attachments to other work.

1. Show locations of cutouts for compartment-mounted toilet accessories.
2. Show locations of centerlines of toilet fixtures.
3. Show overhead support or bracing locations.

C. Samples for Initial Selection: For each type of unit indicated. Include Samples of hardware and accessories involving material and color selection.

1.4 INFORMATIONAL SUBMITTALS

A. Product Certificates: For each type of toilet compartment, from manufacturer.

1.5 CLOSEOUT SUBMITTALS

A. Maintenance Data: For toilet compartments to include in maintenance manuals.

1.6 QUALITY ASSURANCE

A. Surface-Burning Characteristics: As determined by testing identical products according to ASTM E 84, or another standard acceptable to authorities having jurisdiction, by a qualified testing agency. Identify products with appropriate markings of applicable testing agency.

1. Flame-Spread Index: Fifty (50) or less.
2. Smoke-Developed Index: Four hundred fifty (450) or less.

B. Regulatory Requirements: Comply with applicable provisions in the U.S. Architectural & Transportation Barriers Compliance Board's "Americans with Disabilities Act (ADA) and Architectural Barriers Act (ABA) Accessibility Guidelines for Buildings and Facilities" and ICC/ANSI A117.1 for toilet compartments designated as accessible.

1.7 PROJECT CONDITIONS

A. Field Measurements: Verify actual locations of toilet fixtures, walls, columns, ceilings, and other construction contiguous with toilet compartments by field measurements before fabrication.

PART 2 - PRODUCTS

2.1 MATERIALS

A. Aluminum Castings: ASTM B 26/B 26M.

B. Aluminum Extrusions: ASTM B 221.

C. Stainless-Steel Sheet: ASTM A 666, Type 304, stretcher-leveled standard of flatness.

D. Stainless-Steel Castings: ASTM A 743/A 743M.

E. Zamac: ASTM B 86, commercial zinc-alloy die castings.

2.2 SOLID-POLYMER UNITS

A. Manufacturers: Subject to compliance with requirements, available manufacturers offering products that may be incorporated into the Work include, but are not limited to, the following:

1. Accurate Partitions Corporation.
2. Bradley Corporation; Mills Partitions.
3. Global Steel Products Corp.
4. Substitutions: Under provisions of Division 01 Section “Substitution Procedures”.

B. Toilet-Enclosure Style: Overhead braced.

C. Urinal-Screen Style: Wall hung.

D. Door, Panel, Screen, and Pilaster Construction: Solid, high-density polyethylene (HDPE) panel material, not less than 1 inch thick, seamless, with eased edges, and with homogenous color and pattern throughout thickness of material.

1. Integral Hinges: Configure doors and pilasters to receive integral hinges.
2. Heat-Sink Strip: Manufacturer's standard continuous, stainless-steel strip fastened to exposed bottom edges of solid-polymer components to prevent burning.
3. Color and Pattern: One (1) color and pattern in each room as selected by Architect from manufacturer's full range.

E. Pilaster Shoes: Manufacturer's standard design; stainless steel.

F. Brackets (Fittings):

1. Full-Height (Continuous) Type: Manufacturer's standard design; extruded aluminum.

2.3 ACCESSORIES

A. Hardware and Accessories: Manufacturer's standard design, heavy-duty operating hardware and accessories.

1. Material: Chrome-plated zamac.
2. Hinges: Manufacturer's standard continuous, cam type that swings to a closed or partially open position.
3. Latch and Keeper: Manufacturer's standard surface-mounted latch unit designed for emergency access and with combination rubber-faced door strike and keeper. Provide units that comply with regulatory requirements for accessibility at compartments designated as accessible.
4. Coat Hook: Manufacturer's standard combination hook and rubber-tipped bumper, sized to prevent in-swinging door from hitting compartment-mounted accessories.
5. Door Bumper: Manufacturer's standard rubber-tipped bumper at out-swinging doors.
6. Door Pull: Manufacturer's standard unit at out-swinging doors that complies with regulatory requirements for accessibility. Provide units on both sides of doors at compartments designated as accessible.

B. Overhead Bracing: Manufacturer's standard continuous, extruded-aluminum head rail with antigrip profile and in manufacturer's standard finish.

C. Anchorages and Fasteners: Manufacturer's standard exposed fasteners of stainless steel or chrome-plated steel or brass, finished to match the items they are securing, with theft-resistant-type heads. Provide sex-type bolts for through-bolt applications. For concealed anchors, use stainless steel, hot-dip galvanized steel, or other rust-resistant, protective-coated steel.

2.4 FABRICATION

A. Overhead-Braced Units: Provide manufacturer's standard corrosion-resistant supports, leveling mechanism, and anchors at pilasters to suit floor conditions. Provide shoes at pilasters to conceal supports and leveling mechanism.

B. Door Size and Swings: Unless otherwise indicated, provide 24-inch-wide, in-swinging doors for standard toilet compartments and 36-inch-wide, out-swinging doors with a minimum 32-inch-wide, clear opening for compartments designated as accessible.

PART 3 - EXECUTION

3.1 INSTALLATION

A. General: Comply with manufacturer's written installation instructions. Install units rigid, straight, level, and plumb. Secure units in position with manufacturer's recommended anchoring devices.

1. Maximum Clearances:

a. Pilasters and Panels: 1/2 inch.
b. Panels and Walls: 1 inch.

B. Overhead-Braced Units: Secure pilasters to floor and level, plumb, and tighten. Set pilasters with anchors penetrating not less than 1-3/4 inches into structural floor unless otherwise indicated in manufacturer's written instructions. Secure continuous head rail to each pilaster with no fewer than two (2) fasteners. Hang doors to align tops of doors with tops of panels, and adjust so tops of doors are parallel with overhead brace when doors are in closed position.

C. Urinal Screens: Attach with anchoring devices to suit supporting structure. Set units level and plumb, rigid, and secured to resist lateral impact.

3.2 ADJUSTING

A. Hardware Adjustment: Adjust and lubricate hardware according to hardware manufacturer's written instructions for proper operation. Set hinges on in-swinging doors to hold doors open approximately 30 degrees from closed position when unlatched. Set hinges on out-swinging doors to return doors to fully closed position.

END OF SECTION 102113

SECTION 102123 - CUBICLES

PART 1 - GENERAL

1.1 RELATED DOCUMENTS

A. Drawings and general provisions of the Contract, including General and Supplementary Conditions and Division 01 Specification Sections, apply to this Section.

1.2 SUMMARY

A. This Section includes the following:

1. Curtain tracks and curtain carriers.
2. Cubicle curtains.

B. Related Sections include the following:

1. Division 06 Section "Rough Carpentry" for wood blocking for mounting items requiring anchorage.
2. Division 09 Section "Non-Structural Metal Framing" for metal framing and furring for mounting items requiring anchorage.

1.3 PERFORMANCE REQUIREMENTS

A. Curtains: Provide curtain fabrics with the following characteristics:

1. Fabrics are launderable to a temperature of not less than 160 deg F (71 deg C).

1.4 SUBMITTALS

A. Product Data: Include durability, laundry temperature limits, fade resistance, and fire-test-response characteristics for each type of curtain fabric indicated.

1. Include data on each type of applied curtain treatment.

B. Shop Drawings: Show layout and types of cubicles, sizes of curtains, number of carriers, anchorage details, and conditions requiring accessories. Indicate dimensions taken from field measurements.

1. Include details on blocking above ceiling.

C. Samples: For each type of product required, prepared on Samples of size indicated below.

1. Curtain Fabric: 12-inch-square swatch or larger as required to show complete pattern repeat, from dye lot used for the Work, with specified treatments applied. Mark top and face of material.
2. Mesh Top: Not less than 4 inches square.
3. Curtain Track: Not less than 4 inches long.
4. Curtain Carrier: Full-size unit.

D. Curtain and Track Schedule: Use same designations indicated on Drawings.

E. Manufacturer Certificates: Signed by manufacturers certifying that products comply with requirements.

F. Operation and Maintenance Data: For curtains, track, and hardware to include in operation and maintenance manuals.

1.5 PROJECT CONDITIONS

A. Environmental Limitations: Do not install cubicles until spaces are enclosed and weatherproof, wet work in spaces is complete and dry, work above ceilings is complete, and ambient temperature and humidity conditions are maintained at the levels indicated for Project when occupied for its intended use.

1.6 WARRANTY

A. Special Warranty: Manufacturer's standard limited lifetime warranty in which manufacturer agrees to repair or replace components of cubicle curtain and track that fail in materials or workmanship.

PART 2 - PRODUCTS

2.1 CURTAIN TRACKS

A. Manufacturers: Subject to compliance with requirements, available manufacturers offering products that may be incorporated into the Work include, but are not limited to, the following:

1. Cubicle Curtain Factory, Inc.
2. General Cubicle Company, Inc.
3. InPro Corporation.
4. Substitutions: Under provisions of Division 01 Section “Substitution Procedures”.

B. Extruded-Aluminum Track: Not less than 1¼ inches wide by ¾ inch high; with minimum wall thickness of 0.050 inch.

C. Track Accessories: Fabricate splices, end caps, connectors, end stops, coupling and joining sleeves, wall flanges, brackets, ceiling clips, and other accessories from same material and with same finish as track.

1. Suspended Track Support: Not less than 5/8-inch-square tube.

2. End Stop: Removable with carrier hook.

D. Breakaway Curtain Carriers: One-piece nylon breakaway curtain carriers designed to allow curtains to detach from tracks with a pulling force of no more than 5 lbf.

E. Exposed Fasteners: Stainless steel.

F. Concealed Fasteners: Hot-dip galvanized.

2.2 CURTAINS

A. Manufacturers: Subject to compliance with requirements, available manufacturers offering products that may be incorporated into the Work include, but are not limited to, the following:

1. Cubicle Curtain Factory, Inc.
2. General Cubicle Company, Inc.
3. InPro Corporation.
4. Substitutions: Under provisions of Division 01 Section “Substitution Procedures”.

B. Cubicle Curtain Fabric: Curtain manufacturer's standard, one hundred percent (100%) polyester, inherently and permanently flame resistant, stain resistant, and antimicrobial.

1. Color: As selected by Architect and Owner from manufacturer's full range.

C. Curtain Grommets: Two-piece, rolled-edge, rustproof, nickel-plated brass; spaced not more than 6 inches o.c.; machined into top hem.

D. Mesh Top: No. 50 nylon mesh.

E. Beaded-Chain Curtain Drop: 18 inches long; nickel-plated steel, with aluminum hook.

F. Curtain Tieback: Nickel-plated brass chain; one (1) at each curtain termination.

2.3 CURTAIN FABRICATION

A. Fabricate curtains to comply with the following requirements:

1. Width: Equal to track length from which curtain is hung plus ten percent (10%) added fullness, but not less than 12 inches added fullness.
2. Length: Equal to floor-to-ceiling height minus 18 inches from finished ceiling at top, and minus distance above the finished floor at bottom as follows:

   a. Cubicle Curtains: 12 inches.

3. Top Hem: Not less than 1 inch and not more than 1½ inches wide, triple thickness, reinforced with integral web, and double lock stitched.
4. Bottom Hem: Not less than 1 inch and not more than 1½ inches wide, double thickness and double lock stitched.
5. Side Hems: Not less than ½ inch and not more than 1¼ inches wide, with double turned edges, and single lock stitched.

B. Vertical Seams: Not less than ½ inch wide, double turned and double stitched.

PART 3 - EXECUTION

3.1 EXAMINATION

A. Examine substrates and conditions, with Installer present, for compliance with requirements for installation tolerances, and other conditions affecting performance of work.

1. Proceed with installation only after unsatisfactory conditions have been corrected.

3.2 INSTALLATION

A. General: Install tracks level and plumb, according to manufacturer's written instructions.

B. Up to 16 feet in length, provide track fabricated from one (1) continuous length.

1. Curtain Track Mounting: Surface.

C. Surface Track Mounting: Fasten surface-mounted tracks at intervals of not less than 24 inches. Fasten support at each splice and tangent point of each corner. Center fasteners in track to ensure unencumbered carrier operation. Attach track to ceiling as follows:

1. Attach track to suspended ceiling grid with manufacturer's proprietary clip.

D. Track Accessories: Install splices, end caps, connectors, end stops, coupling and joining sleeves, and other accessories as required for a secure and operational installation.

E. Curtain Carriers: Provide curtain carriers adequate for 6-inch spacing along full length of curtain plus an additional carrier.

F. Curtains: Hang curtains on each curtain track. Secure with curtain tieback.

3.3 PROTECTION

A. Protect installed recessed track openings with nonresidue adhesive tape to prevent construction debris from impeding carrier operation. Remove tape prior to Substantial Completion.

END OF SECTION 102123

SECTION 102600 - WALL AND DOOR PROTECTION

PART 1 - GENERAL

1.1 RELATED DOCUMENTS

A. Drawings and general provisions of the Contract, including General and Supplementary Conditions and Division 01 Specification Sections, apply to this Section.

1.2 SUMMARY

A. Section Includes:

1. Corner guards.
2. Impact-resistant wall coverings.

B. Related Sections:

1. Section 087100 "Door Hardware" for metal armor, kick, mop, and push plates.

1.3 ACTION SUBMITTALS

A. Product Data: Include construction details, material descriptions, impact strength, fire-test-response characteristics, dimensions of individual components and profiles, and finishes for each impact-resistant wall protection unit.

B. HPBS Submittals:

1. Product Data for Section 16a-38k-5(d): For adhesives, documentation including printed statement of VOC content.

C. Shop Drawings: For each impact-resistant wall protection unit showing locations and extent. Include sections, details, and attachments to other work.

D. Samples for Initial Selection: For each type of impact-resistant wall protection unit indicated.

1. Include similar Samples of accent strips and accessories involving color selection.

E. Samples for Verification: For each type of exposed finish required, prepared on Samples of size indicated below.

1. Corner Guards: 12 inches long. Include examples of joinery, corners, and field splices.
2. Impact-Resistant Wall Covering: 6 by 6 inches square.

1.4 INFORMATIONAL SUBMITTALS

A. Qualification Data: For qualified Installer.

B. Material Certificates: For each impact-resistant plastic material, from manufacturer.

C. Material Test Reports: For each impact-resistant plastic material.

D. Warranty: Sample of special warranty.

1.5 CLOSEOUT SUBMITTALS

A. Maintenance Data: For each impact-resistant wall protection unit to include in maintenance manuals.

1.6 MAINTENANCE MATERIAL SUBMITTALS

A. Furnish extra materials that match products installed and that are packaged with protective covering for storage and identified with labels describing contents.

1. Corner-Guards: Full-size of maximum length equal to two percent (2%) of each type, color, and texture of units installed, but no fewer than two (2), 4-foot-long units.

B. Include mounting and accessory components. Replacement materials shall be from same production run as installed units.

1.7 QUALITY ASSURANCE

A. Installer Qualifications: An employer of workers trained and approved by manufacturer.

B. Source Limitations: Obtain impact-resistant wall protection units from single source from single manufacturer.

C. Surface-Burning Characteristics: Provide impact-resistant, plastic wall protection units with surface-burning characteristics as determined by testing identical products per ASTM E 84, NFPA 255, or UL 723 by UL or another qualified testing agency.

1.8 DELIVERY, STORAGE, AND HANDLING

A. Store impact-resistant wall protection units in original undamaged packages and containers inside well-ventilated area protected from weather, moisture, soiling, extreme temperatures, and humidity.

1. Maintain room temperature within storage area at not less than 70 deg F (21 deg C) during the period plastic materials are stored.
2. Store plastic wall protection components for a minimum of seventy-two (72) hours, or until plastic material attains a minimum room temperature of 70 deg F (21 deg C).

a. Store corner-guard covers in a vertical position.

1.9 PROJECT CONDITIONS

A. Environmental Limitations: Do not deliver or install impact-resistant wall protection units until building is enclosed and weatherproof, wet work is complete and dry, and HVAC system is operating and maintaining temperature at 70 deg F (21 deg C) for not less than seventy-two (72) hours before beginning installation and for the remainder of the construction period.

1.10 WARRANTY

A. Special Warranty: Manufacturer's standard form in which manufacturer agrees to repair or replace components of impact-resistant wall protection units that fail in materials or workmanship within specified warranty period.

1. Failures include, but are not limited to, the following:

a. Structural failures.
b. Deterioration of plastic and other materials beyond normal use.

2. Warranty Period: Five (5) years from date of Substantial Completion.

PART 2 - PRODUCTS

2.1 MATERIALS

A. PVC Plastic: ASTM D 1784, Class 1, textured, chemical- and stain-resistant, high-impact-resistant PVC or acrylic-modified vinyl plastic with integral color throughout; extruded and sheet material, thickness as indicated.

1. Impact Resistance: Minimum 25.4 ft-lbf/in. of notch when tested according to ASTM D 256, Test Method A.
2. Chemical and Stain Resistance: Tested according to ASTM D 543 or ASTM D 1308.
3. Self-extinguishing when tested according to ASTM D 635.
4. Flame-Spread Index: 25 or less.
5. Smoke-Developed Index: 450 or less.

B. Stainless-Steel Sheet: ASTM A 240.

C. Fasteners: Aluminum, nonmagnetic stainless-steel, or other noncorrosive metal screws, bolts, and other fasteners compatible with items being fastened. Use security-type fasteners where exposed to view.

D. Adhesive: As recommended by impact-resistant plastic wall protection manufacturer and with a VOC content of 70 g/L or less when calculated according to 40 CFR 59, Subpart D (EPA Method 24).

2.2 CORNER GUARDS

A. Surface-Mounted, Metal Corner Guards: Fabricated from one-piece, formed or extruded metal with formed edges; with 90- or 135-degree turn to match wall condition.

1. Manufacturers: Subject to compliance with requirements, available manufacturers offering products that may be incorporated into the Work include, but are not limited to, the following:

a. IPC Door and Wall Protection Systems; Division of InPro Corporation
b. Korogard Wall Protection Systems; a division of RJF International Corporation
c. Pawling Corporation
d. Substitutions: Under provisions of Section 012500 “Substitution Procedures”.

2. Material: Stainless steel, Type 304.

   a. Thickness: Minimum 16 gage.
   b. Finish: Directional satin, No. 4.

3. Wing Size: Nominal 2½ by 2½ inches.
4. Mounting: Flat-head, countersunk screws through factory-drilled mounting holes.

2.3 IMPACT-RESISTANT WALL COVERINGS

A. Impact-Resistant Sheet Wall Covering (**FRP**): Fabricated from plastic sheet wall-covering material.

1. Manufacturers: Subject to compliance with requirements, available manufacturers offering products that may be incorporated into the Work include, but are not limited to, the following:

   a. IPC Door and Wall Protection Systems; Division of InPro Corporation
   b. Korogard Wall Protection Systems; a division of RJF International Corporation
   c. Pawling Corporation
   d. Substitutions: Under provisions of Section 012500 “Substitution Procedures”.

2. Size: 48 by 96 inches for sheet.
3. Sheet Thickness: 0.125 inch.
4. Color and Texture: As selected by Architect and Owner from manufacturer's full range.
5. Height: Full wall.
6. Trim and Joint Moldings: Extruded rigid plastic that matches sheet wall covering color.
7. Mounting: Adhesive.

2.4 METAL FINISHES

A. Comply with NAAMM's "Metal Finishes Manual for Architectural and Metal Products" for recommendations for applying and designating finishes.

1. Remove tool and die marks and stretch lines, or blend into finish.
2. Grind and polish surfaces to produce uniform finish, free of cross scratches.
3. Run grain of directional finishes with long dimension of each piece.
4. When polishing is completed, passivate and rinse surfaces. Remove embedded foreign matter and leave surfaces chemically clean.

B. Protect finishes on exposed surfaces from damage by applying a strippable, temporary protective covering before shipping.

PART 3 - EXECUTION

3.1 EXAMINATION

A. Examine substrates and wall areas, with Installer present, for compliance with requirements for installation tolerances, fire rating, and other conditions affecting performance of work.

B. Examine walls to which impact-resistant wall protection will be attached for blocking, grounds, and other solid backing that have been installed in the locations required for secure attachment of support fasteners.

1. For impact-resistant wall protection units attached with adhesive or foam tape, verify compatibility with and suitability of substrates, including compatibility with existing finishes or primers.

C. Proceed with installation only after unsatisfactory conditions have been corrected.

3.2 PREPARATION

A. Complete finishing operations, including painting, before installing impact-resistant wall protection system components.

B. Before installation, clean substrate to remove dust, debris, and loose particles.

3.3 INSTALLATION

A. General: Install impact-resistant wall protection units level, plumb, and true to line without distortions. Do not use materials with chips, cracks, voids, stains, or other defects that might be visible in the finished Work.

1. Install impact-resistant wall protection units in locations and at mounting heights indicated on Drawings.

B. Impact-Resistant Wall Covering: Install top and edge moldings, corners, and divider bars as required for a complete installation.

3.4 CLEANING

A. Immediately after completion of installation, clean using a standard, ammonia-based, household cleaning agent.

B. Remove excess adhesive using methods and materials recommended in writing by manufacturer.

END OF SECTION 102600

SECTION 102800 - TOILET, BATH, AND LAUNDRY ACCESSORIES

PART 1 - GENERAL

1.1 RELATED DOCUMENTS

A. Drawings and general provisions of the Contract, including General and Supplementary Conditions and Division 01 Specification Sections, apply to this Section.

1.2 SUMMARY

A. Section Includes:

1. Public-use washroom accessories.
2. Public-use shower room accessories.
3. Private-use bathroom accessories.
4. Warm-air dryers.

B. Related Sections:

1. Section 093000 "Tiling" for ceramic toilet and bath accessories.

1.3 ACTION SUBMITTALS

A. Product Data: For each type of product indicated. Include the following:

1. Construction details and dimensions.
2. Anchoring and mounting requirements, including requirements for cutouts in other work and substrate preparation.
3. Material and finish descriptions.
4. Features that will be included for Project.
5. Manufacturer's warranty.

B. Samples: Full size, for each accessory item to verify design, operation, and finish requirements.

1. Approved full-size Samples will be returned and may be used in the Work.

C. Product Schedule: Indicating types, quantities, sizes, and installation locations by room of each accessory required.

1. Identify locations using room designations indicated.

1.4 INFORMATIONAL SUBMITTALS

A. Warranty: Sample of special warranty.

1.5 CLOSEOUT SUBMITTALS

A. Maintenance Data: For toilet and bath accessories to include in maintenance manuals.

1.6 QUALITY ASSURANCE

A. Source Limitations: For products listed together in the same Part 2 articles, obtain products from single source from single manufacturer.

B. Electrical Components, Devices, and Accessories: Listed and labeled as defined in NFPA 70, by a qualified testing agency, and marked for intended location and application.

1.7 COORDINATION

A. Coordinate accessory locations with other work to prevent interference with clearances required for access by people with disabilities, and for proper installation, adjustment, operation, cleaning, and servicing of accessories.

B. Deliver inserts and anchoring devices set into concrete or masonry as required to prevent delaying the Work.

1.8 WARRANTY

A. Special Mirror Warranty: Manufacturer's standard form in which manufacturer agrees to replace mirrors that develop visible silver spoilage defects and that fail in materials or workmanship within specified warranty period.

1. Warranty Period: Fifteen (15) years from date of Substantial Completion.

PART 2 - PRODUCTS

2.1 MATERIALS

A. Stainless Steel: ASTM A 666, Type 304, 0.031-inch minimum nominal thickness unless otherwise indicated.

B. Galvanized-Steel Mounting Devices: ASTM A 153, hot-dip galvanized after fabrication.

C. Fasteners: Screws, bolts, and other devices of same material as accessory unit and tamper-and-theft resistant where exposed, and of galvanized steel where concealed.

D. Mirrors: ASTM C 1503, Mirror Glazing Quality, clear-glass mirrors, nominal 6.0 mm thick.

E. ABS Plastic: Acrylonitrile-butadiene-styrene resin formulation.

2.2 PUBLIC-USE WASHROOM ACCESSORIES

A. Manufacturers: Subject to compliance with requirements, available manufacturers offering products that may be incorporated into the Work include, but are not limited to, the following:

1. A & J Washroom Accessories, Inc.
2. American Specialties, Inc.
3. Bobrick Washroom Equipment, Inc.
4. Bradley Corporation
5. Substitutions: Under provisions of Section 012500 “Substitution Procedures”.

B. Toilet Tissue (Roll) Dispenser:

1. Basis-of-Design Product: **Bobrick #B-2888**.
2. Description: Double roll dispenser.
3. Mounting: Surface mounted.
4. Operation: Noncontrol delivery with theft-resistant spindle.
5. Capacity: Designed for 5¼ inch diameter tissue rolls.
6. Material and Finish: Stainless steel, No. 4 finish (satin) with plastic spindle.

C. Liquid-Soap Dispenser:

1. Basis-of-Design Product: **Bobrick #B-2111**.
2. Description: Designed for dispensing soap in liquid or lotion form.
3. Mounting: Vertically oriented, surface mounted.
4. Capacity: 40 oz.
5. Materials: Stainless steel, No. 4 finish (satin) container and black molded plastic push button and spout.
6. Lockset: Special key provided.
7. Refill Indicator: Window type.

D. Grab Bar:

1. Basis-of-Design Product: **Bobrick #B-6806.99x18, B-6806.99x36 and #B-6806.99x42**.
2. Mounting: Flanges with concealed fasteners.
3. Material: Stainless steel, 0.05 inch thick.

    a. Finish: Smooth, No. 4 finish (satin) on ends and slip-resistant texture in grip area.

4. Outside Diameter: 1½ inches.
5. Configuration and Length: Straight, in multiple lengths.

E. Swing-Up Grab Bar:

1. Basis-of-Design Product: **Bobrick # B-4998.99**.
2. Mounting: Flanges with exposed fasteners.
3. Material: Stainless steel, 0.05 inch thick.

    a. Finish: Smooth, No. 4 finish (satin) on ends and slip-resistant texture in grip area.

4. Outside Diameter: 1½ inches.

F. Mirror Unit:

1. Basis-of-Design Product: **Bobrick #B-293-2436**.
2. Frame: Stainless steel, fixed tilt.

    a. Corners: Manufacturer's standard.

3. Hangers: Produce rigid, tamper- and theft-resistant installation, using method indicated below.

a. One-piece, galvanized-steel, wall-hanger device with spring-action locking mechanism to hold mirror unit in position with no exposed screws or bolts.
b. Wall bracket of galvanized steel, equipped with concealed locking devices requiring a special tool to remove.

4. Size: 24x36.

2.3 PUBLIC-USE SHOWER ROOM ACCESSORIES

A. Manufacturers: Subject to compliance with requirements, available manufacturers offering products that may be incorporated into the Work include, but are not limited to, the following:

1. A & J Washroom Accessories, Inc.
2. American Specialties, Inc.
3. Bobrick Washroom Equipment, Inc.
4. Bradley Corporation
5. Substitutions: Under provisions of Section 012500 “Substitution Procedures”.

B. Shower Curtain Rod:

1. Basis-of-Design Product: **Bobrick #B-207x48**.
2. Description: 1-inch OD; fabricated from nominal 0.0375-inch-thick stainless steel.
3. Mounting Flanges: Chrome-plated plastic flanges, mounted on concealed wall brackets.
4. Finish: No. 4 (satin).

C. Shower Curtain:

1. Basis-of-Design Product: **Bobrick #B-204-2 and #B-204-3**.
2. Size: Minimum 12 inches wider than opening by 72 inches high.
3. Material: Nylon-reinforced vinyl, minimum 10 oz. or 0.008-inch- thick vinyl, with integral antibacterial agent.
4. Color: White.
5. Grommets: Corrosion resistant at minimum 6 inches o.c. through top hem.
6. Shower Curtain Hooks: Chrome-plated or stainless-steel, spring wire curtain hooks with snap fasteners, sized to accommodate specified curtain rod. Provide one (1) hook per curtain grommet.

D. Folding Shower Seat:

1. Basis-of-Design Product: **Bobrick #5181**.
2. Configuration: L-shaped seat, designed for wheelchair access.
3. Seat: Phenolic or polymeric composite of slat-type or one-piece construction in color as selected by Architect.
4. Mounting Mechanism: Stainless steel, No. 4 finish (satin).

2.4 PRIVATE-USE BATHROOM ACCESSORIES

A. Manufacturers: Subject to compliance with requirements, available manufacturers offering products that may be incorporated into the Work include, but are not limited to, the following:

1. A & J Washroom Accessories, Inc.

2. American Specialties, Inc.
3. Bobrick Washroom Equipment, Inc.
4. Bradley Corporation
5. Substitutions: Under provisions of Section 012500 “Substitution Procedures”.

B. Robe Hook:

1. Basis-of-Design Product: **Bobrick #B-6827**.
2. Description: Single-prong unit.
3. Material and Finish: Stainless steel, No. 4 finish (satin).
4. Location: On back of single use restroom doors.

2.5 WARM-AIR DRYERS

A. Manufacturers: Subject to compliance with requirements, available manufacturers offering products that may be incorporated into the Work include, but are not limited to, the following:

1. American Dryer, Inc.
2. Excel Dryer Corporation.
3. Tubular Specialties Manufacturing, Inc.
4. World Dryer Corporation.
5. Substitutions: Under provisions of Section 012500 “Substitution Procedures”.

B. Warm-Air Hand Dryer:

1. Basis-of-Design Product: **Excel #XLERATOR**.
2. Mounting: Recessed kit.
3. Operation: Electronic-sensor activated with timed power cut-off switch.

   a. Operation Time: 30 to 40 seconds.

4. Cover Material and Finish: Stainless steel, No. 4 finish (satin).
5. Electrical Requirements: 120 volt, 12.5 amp, 60 Hz.

2.6 FABRICATION

A. General: Fabricate units with tight seams and joints, and exposed edges rolled. Hang doors and access panels with full-length, continuous hinges. Equip units for concealed anchorage and with corrosion-resistant backing plates.

B. Keys: Provide universal keys for internal access to accessories for servicing and resupplying. Provide minimum of six (6) keys to Owner's representative.

PART 3 - EXECUTION

3.1 INSTALLATION

A. Install accessories according to manufacturers' written instructions, using fasteners appropriate to substrate indicated and recommended by unit manufacturer. Install units level, plumb, and firmly anchored in locations and at heights indicated.

B. Grab Bars: Install to withstand a downward load of at least 250 lbf, when tested according to ASTM F 446.

3.2 ADJUSTING AND CLEANING

A. Adjust accessories for unencumbered, smooth operation. Replace damaged or defective items.

B. Remove temporary labels and protective coatings.

C. Clean and polish exposed surfaces according to manufacturer's written recommendations.

END OF SECTION 102800

SECTION 104413 - FIRE EXTINGUISHER CABINETS

PART 1 - GENERAL

1.1 RELATED DOCUMENTS

A. Drawings and general provisions of the Contract, including General and Supplementary Conditions and Division 01 Specification Sections, apply to this Section.

1.2 SUMMARY

A. Section Includes:

1. Fire protection cabinets for the following:

a. Portable fire extinguishers.

B. Related Sections:

1. Section 099113 "Exterior Painting" for field painting fire protection cabinets.
2. Section 099123 "Interior Painting" for field painting fire protection cabinets.
3. Section 101400 "Signage" for directional signage to out-of-sight fire extinguishers and cabinets.
4. Section 104416 "Fire Extinguishers."
5. Section 265100 "Interior Lighting" for fire extinguisher location lights.

1.3 ACTION SUBMITTALS

A. Product Data: For each type of product indicated. Include construction details, material descriptions, dimensions of individual components and profiles, and finishes for fire protection cabinets.

1. Fire Protection Cabinets: Include roughing-in dimensions, details showing mounting methods, relationships of box and trim to surrounding construction, door hardware, cabinet type, trim style, and panel style.

B. Shop Drawings: For fire protection cabinets. Include plans, elevations, sections, details, and attachments to other work.

C. Samples for Verification: For each type of exposed finish required, prepared on Samples of size indicated below:

1. Size: 6 by 6 inches square.

1.4 CLOSEOUT SUBMITTALS

A. Maintenance Data: For fire protection cabinets to include in maintenance manuals.

1.5 QUALITY ASSURANCE

A. Fire-Rated, Fire Protection Cabinets: Listed and labeled to comply with requirements in ASTM E 814 for fire-resistance rating of walls where they are installed.

1.6 COORDINATION

A. Coordinate size of fire protection cabinets to ensure that type and capacity of fire extinguishers indicated are accommodated.

B. Coordinate sizes and locations of fire protection cabinets with wall depths.

1.7 SEQUENCING

A. Apply vinyl lettering on field-painted, fire protection cabinets after painting is complete.

PART 2 - PRODUCTS

2.1 MATERIALS

A. Cold-Rolled Steel Sheet: ASTM A 1008, Commercial Steel (CS), Type B.

B. Acrylic Bubble: One piece.

2.2 FIRE PROTECTION CABINET

A. Cabinet Type: Suitable for fire extinguisher.

1. Products: Subject to compliance with requirements, available products that may be incorporated into the Work include, but are not limited to, the following:

a. J. L. Industries, Inc., a division of Activar Construction Products Group; **CS2015F17**
b. Larsen's Manufacturing Company
c. Substitutions: Under provisions of Section 012500 “Substitution Procedures”.

B. Cabinet Construction: Nonrated.

C. Cabinet Material: Steel sheet.

D. Semirecessed Cabinet: One-piece combination trim and perimeter door frame overlapping surrounding wall surface with exposed trim face and wall return at outer edge (backbend).

1. Square-Edge Trim: 2½ inch backbend depth.

E. Cabinet Trim Material: Steel sheet.

F. Door Material: Steel sheet.

G. Door Style: Fully glazed panel with frame.

H. Door Glazing: Tempered float glass (clear).

I. Door Hardware: Manufacturer's standard door-operating hardware of proper type for cabinet type, trim style, and door material and style indicated.

1. Provide projecting door pull and friction latch.
2. Provide continuous hinge, of same material and finish as trim, permitting door to open 180 degrees.

J. Accessories:

1. Mounting Bracket: Manufacturer's standard steel, designed to secure fire extinguisher to fire protection cabinet, of sizes required for types and capacities of fire extinguishers indicated, with plated or baked-enamel finish.
2. Lettered Door Handle: One-piece, cast-iron door handle with the word "FIRE" embossed into face.
3. Identification: Lettering complying with authorities having jurisdiction for letter style, size, spacing, and location. Locate as directed by Architect.

a. Identify fire extinguisher in fire protection cabinet with the words "FIRE EXTINGUISHER."

1) Location: Applied to cabinet glazing.
2) Application Process: Pressure-sensitive vinyl letters.
3) Lettering Color: Red.
4) Orientation: Vertical.

K. Finishes:

1. Manufacturer's standard baked-enamel paint for the following:

a. Exterior of cabinet, door, and trim except for those surfaces indicated to receive another finish.
b. Interior of cabinet and door.

2.3 FABRICATION

A. Fire Protection Cabinets: Provide manufacturer's standard box (tub) with trim, frame, door, and hardware to suit cabinet type, trim style, and door style indicated.

1. Weld joints and grind smooth.
2. Provide factory-drilled mounting holes.
3. Prepare doors and frames to receive locks.
4. Install door locks at factory.

B. Cabinet Doors: Fabricate doors according to manufacturer's standards, from materials indicated and coordinated with cabinet types and trim styles selected.

1. Fabricate door frames with tubular stiles and rails and hollow-metal design, minimum ½ inch thick.
2. Fabricate door frames of one-piece construction with edges flanged.

3. Miter and weld perimeter door frames.

C. Cabinet Trim: Fabricate cabinet trim in one piece with corners mitered, welded, and ground smooth.

2.4 GENERAL FINISH REQUIREMENTS

A. Comply with NAAMM's "Metal Finishes Manual for Architectural and Metal Products" for recommendations for applying and designating finishes.

B. Protect mechanical finishes on exposed surfaces of fire protection cabinets from damage by applying a strippable, temporary protective covering before shipping.

C. Finish fire protection cabinets after assembly.

D. Appearance of Finished Work: Noticeable variations in same piece are not acceptable. Variations in appearance of adjoining components are acceptable if they are within the range of approved Samples and are assembled or installed to minimize contrast.

2.5 STEEL FINISHES

A. Factory Prime Finish: Apply manufacturer's standard, fast-curing, lead- and chromate-free, universal primer immediately after surface preparation and pretreatment.

B. Baked-Enamel or Powder-Coat Finish: Immediately after cleaning and pretreating, apply manufacturer's standard two-coat, baked-on finish consisting of prime coat and thermosetting topcoat. Comply with coating manufacturer's written instructions for applying and baking to achieve a minimum dry film thickness of 2 mils.

1. Color and Gloss: As selected by Architect and Owner from manufacturer's full range.

PART 3 - EXECUTION

3.1 EXAMINATION

A. Examine roughing-in for cabinets to verify actual locations of piping connections before cabinet installation.

B. Examine walls and partitions for suitable framing depth and blocking where recessed cabinets will be installed.

C. Proceed with installation only after unsatisfactory conditions have been corrected.

3.2 PREPARATION

A. Prepare recesses for semirecessed fire protection cabinets as required by type and size of cabinet and trim style.

3.3 INSTALLATION

A. General: Install fire protection cabinets in locations and at mounting heights indicated or, if not indicated, at heights acceptable to authorities having jurisdiction.

B. Fire Protection Cabinets: Fasten cabinets to structure, square and plumb.

1. Fasten mounting brackets to inside surface of fire protection cabinets, square and plumb.

C. Identification: Apply vinyl lettering at locations indicated.

3.4 ADJUSTING AND CLEANING

A. Remove temporary protective coverings and strippable films, if any, as fire protection cabinets are installed unless otherwise indicated in manufacturer's written installation instructions.

B. Adjust fire protection cabinet doors to operate easily without binding. Verify that integral locking devices operate properly.

C. On completion of fire protection cabinet installation, clean interior and exterior surfaces as recommended by manufacturer.

D. Touch up marred finishes, or replace fire protection cabinets that cannot be restored to factory-finished appearance. Use only materials and procedures recommended or furnished by fire protection cabinet and mounting bracket manufacturers.

E. Replace fire protection cabinets that have been damaged or have deteriorated beyond successful repair by finish touchup or similar minor repair procedures.

END OF SECTION 104413

SECTION 104416 - FIRE EXTINGUISHERS

PART 1 - GENERAL

1.1 RELATED DOCUMENTS

A. Drawings and general provisions of the Contract, including General and Supplementary Conditions and Division 01 Specification Sections, apply to this Section.

1.2 SUMMARY

A. Section includes portable, hand-carried fire extinguishers and mounting brackets for fire extinguishers.

B. Related Sections:

1. Section 104413 "Fire Extinguisher Cabinets."

1.3 ACTION SUBMITTALS

A. Product Data: For each type of product indicated. Include rating and classification, material descriptions, dimensions of individual components and profiles, and finishes for fire extinguisher and mounting brackets.

1.4 INFORMATIONAL SUBMITTALS

A. Warranty: Sample of special warranty.

1.5 CLOSEOUT SUBMITTALS

A. Operation and Maintenance Data: For fire extinguishers to include in maintenance manuals.

1.6 QUALITY ASSURANCE

A. NFPA Compliance: Fabricate and label fire extinguishers to comply with NFPA 10, "Portable Fire Extinguishers."

B. Fire Extinguishers: Listed and labeled for type, rating, and classification by an independent testing agency acceptable to authorities having jurisdiction.

1. Provide fire extinguishers approved, listed, and labeled by FMG.

1.7 COORDINATION

A. Coordinate type and capacity of fire extinguishers with fire protection cabinets to ensure fit and function.

1.8 WARRANTY

A. Special Warranty: Manufacturer's standard form in which manufacturer agrees to repair or replace fire extinguishers that fail in materials or workmanship within specified warranty period.

1. Failures include, but are not limited to, the following:

a. Failure of hydrostatic test according to NFPA 10.
b. Faulty operation of valves or release levers.

2. Warranty Period: Six (6) years from date of Substantial Completion.

PART 2 - PRODUCTS

2.1 PORTABLE, HAND-CARRIED FIRE EXTINGUISHERS

A. Fire Extinguishers: Type, size, and capacity for each fire protection cabinet and mounting bracket indicated.

1. Manufacturers: Subject to compliance with requirements, available manufacturers offering products that may be incorporated into the Work include, but are not limited to, the following:

a. J. L. Industries, Inc.; a division of Activar Construction Products Group; **Cosmic 10E**
b. Larsen's Manufacturing Company; **MP10**
c. Substitutions: Under provisions of Section 012500 “Substitution Procedures”.

2. Valves: Manufacturer's standard.
3. Handles and Levers: Manufacturer's standard.
4. Instruction Labels: Include pictorial marking system complying with NFPA 10, Appendix B.

B. Multipurpose Dry-Chemical Type in Steel Container: UL-rated 4-A:80-B:C, 10-lb nominal capacity, with monoammonium phosphate-based dry chemical in enameled-steel container.

2.2 MOUNTING BRACKETS

A. Mounting Brackets: Manufacturer's standard steel, designed to secure fire extinguisher to wall or structure, of sizes required for types and capacities of fire extinguishers indicated, with plated or red baked-enamel finish.

PART 3 - EXECUTION

3.1 EXAMINATION

A. Examine fire extinguishers for proper charging and tagging.

1. Remove and replace damaged, defective, or undercharged fire extinguishers.

B. Proceed with installation only after unsatisfactory conditions have been corrected.

3.2 INSTALLATION

A. General: Install fire extinguishers and mounting brackets in locations indicated and in compliance with requirements of authorities having jurisdiction.

1. Mounting Brackets: 48 inches above finished floor to top of fire extinguisher.

B. Mounting Brackets: Fasten mounting brackets to surfaces, square and plumb, at locations indicated.

END OF SECTION 104416

SECTION 105113 - METAL LOCKERS

PART 1 - GENERAL

1.1 RELATED DOCUMENTS

A. Drawings and general provisions of the Contract, including General and Supplementary Conditions and Division 01 Specification Sections, apply to this Section.

1.2 SUMMARY

A. Section Includes:

1. Welded corridor lockers.
2. Locker benches.

1.3 ACTION SUBMITTALS

A. Product Data: For each type of metal locker.

1. Include construction details, material descriptions, dimensions of individual components and profiles, and finishes for each type of metal locker and bench.

B. HPBS Submittals:

1. Product Data for Section 16a-38k-6(b)(4): For composite wood products used in lockers, documentation indicating that product contains no urea formaldehyde.

C. Shop Drawings: For metal lockers.

1. Include plans, elevations, sections, details, and attachments to other work.
2. Show locker trim and accessories.
3. Include locker identification system and numbering sequence.

D. Samples: For each color specified, in manufacturer's standard size.

E. Product Schedule: For lockers.

1.4 INFORMATIONAL SUBMITTALS

A. Qualification Data: For Installer.

B. Sample Warranty: For special warranty.

1.5 CLOSEOUT SUBMITTALS

A. Maintenance Data: For adjusting, repairing, and replacing locker doors and latching mechanisms to include in maintenance manuals.

1.6 MAINTENANCE MATERIAL SUBMITTALS

A. Furnish extra materials that match products installed and that are packaged with protective covering for storage and identified with labels describing contents.

1. Full-size units of the following metal locker hardware items equal to ten percent (10%) of amount installed for each type and finish installed, but no fewer than five (5) units:

a. Identification plates.
b. Hooks.

1.7 DELIVERY, STORAGE, AND HANDLING

A. Do not deliver metal lockers until spaces to receive them are clean, dry, and ready for their installation.

1.8 FIELD CONDITIONS

A. Field Measurements: Verify actual dimensions of recessed openings by field measurements before fabrication.

1.9 COORDINATION

A. Coordinate sizes and locations of concrete and/or masonry bases for metal lockers.

B. Coordinate sizes and locations of framing, blocking, furring, reinforcements, and other related units of work specified in other Sections to ensure that metal lockers can be supported and installed as indicated.

1.10 WARRANTY

A. Special Warranty: Manufacturer agrees to repair or replace components of metal lockers that fail in materials or workmanship, excluding finish, within specified warranty period.

1. Failures include, but are not limited to, the following:

a. Structural failures.
b. Faulty operation of latches and other door hardware.

2. Damage from deliberate destruction and vandalism is excluded.
3. Warranty Period for Welded Metal Lockers: Ten (10) years from date of Substantial Completion.

PART 2 - PRODUCTS

2.1 MANUFACTURERS

A. Source Limitations: Obtain metal lockers and accessories from single source from single locker manufacturer.

1. Obtain locks from single lock manufacturer.

2.2 PERFORMANCE REQUIREMENTS

A. Accessibility Requirements: For lockers indicated to be accessible, comply with applicable provisions in the U.S. Architectural & Transportation Barriers Compliance Board's ADA-ABA Accessibility Guidelines and ICC A117.1.

2.3 WELDED CORRIDOR LOCKERS

A. Basis-of-Design Product:

1. Penco Products, Inc; **All-Welded Defiant II**

B. Products: Subject to compliance with requirements, available products that may be incorporated into the Work include, but are not limited to, the following:

1. Lyon Workspace Products, LLC
2. Republic Storage Systems Company
3. Substitutions: Under provisions of Section 012500 “Substitution Procedures”.

C. Doors: One piece; fabricated from 0.075-inch nominal-thickness steel sheet; formed into channel shape with double bend at vertical edges and with right-angle single bend at horizontal edges.

1. Reinforcement: Manufacturer's standard reinforcing angles, channels, or stiffeners for doors more than 15 inches wide; welded to inner face of doors.
2. Door Style: Vented panel as follows:

a. Louvered Vents: No fewer than three (3) louver openings at top and bottom for double-tier lockers.

D. Body: Assembled by welding body components together. Fabricate from unperforated steel sheet with thicknesses as follows:

1. Tops, Bottoms, and Sides: 0.060-inch nominal thickness.
2. Backs: 0.048-inch nominal thickness.
3. Shelves: 0.060-inch nominal thickness, with double bend at front and single bend at sides and back.

E. Frames: Channel formed; fabricated from 0.060-inch nominal-thickness steel sheet; lapped and factory welded at corners; with top and bottom main frames factory welded into vertical main frames. Form continuous, integral, full-height door strikes on vertical main frames.

F. Hinges: Welded to door and attached to door frame with no fewer than two (2) factory-installed rivets per hinge that are completely concealed and tamper resistant when door is closed; fabricated to swing 180 degrees; self-closing.

1. Continuous Hinges: Manufacturer's standard, steel, full height.

G. Recessed Door Handle and Latch: Stainless-steel cup with integral door pull, recessed so locking device does not protrude beyond door face; pry and vandal resistant.

1. Single-Point Latching: Nonmoving latch hook with steel padlock loop that projects through recessed cup and is finished to match metal locker body.

    a. Latch Hook: Equip each door with one (1) latch hook, fabricated from 0.120-inch nominal-thickness steel sheet; welded midway up full-height door strike; with resilient silencer.

H. Locks: Combination padlocks.

1. Provide digital keypad locks similar to **#DK-APS** manufactured by Digilock, a division of Security People, Inc., at five percent (5%) of the total amount of lockers to meet accessibility requirements.

I. Identification Plates: Manufacturer's standard, etched, embossed, or stamped aluminum plates, with numbers and letters at least 3/8 inch high.

J. Hooks: Manufacturer's standard ball-pointed type, aluminum or steel; zinc plated.

K. Continuous Sloping Tops: Fabricated from 0.048-inch nominal-thickness steel sheet, with a pitch of approximately 20 degrees.

L. Filler Panels: Fabricated from 0.048-inch nominal-thickness steel sheet.

M. Materials:

1. Cold-Rolled Steel Sheet: ASTM A 1008, Commercial Steel (CS), Type B, suitable for exposed applications.

N. Finish: Baked enamel or powder coat.

1. Color: As selected by Architect and Owner from manufacturer's full range.

2.4 LOCKS

A. Basis-of-Design Product:

1. Master Lock Company, LLC

B. Manufacturers: Subject to compliance with requirements, available manufacturers offering products that may be incorporated into the Work include, but are not limited to, the following:

1. American Locker Company; A Division of Master Lock Company, LLC
2. Zephyr Lock LLC
3. Substitutions: Under provisions of Section 012500 “Substitution Procedures”.

C. Combination Padlocks: Provided by Owner.

2.5 LOCKER BENCHES

A. Basis-of-Design Product:

1. Wisconsin Bench Manufacturing

B. Manufacturers: Subject to compliance with requirements, available manufacturers offering products that may be incorporated into the Work include, but are not limited to, the following:

1. Robinson Steel Company
2. Substitutions: Under provisions of Section 012500 “Substitution Procedures”.

C. Provide bench units with overall assembly height of 17¼ inches.

D. Bench Tops: Manufacturer's standard one-piece units, with rounded corners and edges.

1. Size: Minimum 9½ inches wide by 1¼ inches thick except provide minimum 20-inch-wide tops where accessible benches are indicated.
2. Laminated clear hardwood with one (1) coat of clear sealer on all surfaces and one (1) coat of clear lacquer on top and sides.
3. Provide with slip resistant surface.

E. Backrests: Manufacturer's standard one-piece units, with rounded corners and edges.

1. Size: Minimum 20-inch-wide backs where accessible benches are indicated.
2. Laminated clear hardwood with one (1) coat of clear sealer on all surfaces and one (1) coat of clear lacquer on top and sides.

F. Fixed Pedestals: Manufacturer's standard supports, with predrilled fastener holes for attaching bench top and anchoring to floor, complete with fasteners and anchors, and as follows:

1. Tubular Steel: 1½-inch-diameter steel tubing threaded on both ends, with standard pipe flange at top and bell-shaped cast-iron base; with baked-enamel or powder-coat finish; anchored with exposed fasteners.

a. Color: As selected by Architect and Owner from manufacturer's full range.

G. Materials:

1. Steel Tube: ASTM A 500, cold rolled.

2.6 FABRICATION

A. Fabricate metal lockers square, rigid, without warp, and with metal faces flat and free of dents or distortion. Make exposed metal edges safe to touch and free of sharp edges and burrs.

1. Form body panels, doors, shelves, and accessories from one-piece steel sheet unless otherwise indicated.
2. Provide fasteners, filler plates, supports, clips, and closures as required for complete installation.

B. Fabricate each metal locker with an individual door and frame; individual top, bottom, and back; and common intermediate uprights separating compartments. Factory weld frame members of each metal locker together to form a rigid, one-piece assembly.

C. Equipment: Provide each locker with an identification plate and the following equipment:

1. Double-Tier Units: One (1) double-prong ceiling hook and two (2) single-prong wall hooks.

D. Welded Construction: Factory preassemble metal lockers by welding all joints, seams, and connections; with no bolts, nuts, screws, or rivets used in assembly of main locker groups. Factory-weld main locker groups into one-piece structures. Grind exposed welds flush.

E. Accessible Lockers: Fabricate as follows:

1. Locate bottom shelf no lower than 15 inches above the floor.
2. Where hooks, coat rods, or additional shelves are provided, locate no higher than 48 inches above the floor.
3. Operation of the recessed hasp latch will not require pinching or twisting actions on the part of the user.
4. Five percent (5%) of each type of locker, in each location, must be accessible.

F. Continuous Sloping Tops: Fabricated in lengths as long as practical, without visible fasteners at splice locations; finished to match lockers.

G. Filler Panels: Fabricated in an unequal leg angle shape; finished to match lockers. Provide slip-joint filler angle formed to receive filler panel.

2.7 ACCESSORIES

A. Fasteners: Zinc- or nickel-plated steel, slotless-type, exposed bolt heads; with self-locking nuts or lock washers for nuts on moving parts.

B. Anchors: Material, type, and size required for secure anchorage to each substrate.

1. Provide nonferrous-metal or hot-dip galvanized anchors and inserts on inside face of exterior walls for corrosion resistance.
2. Provide toothed-steel or lead expansion sleeves for drilled-in-place anchors.

PART 3 - EXECUTION

3.1 EXAMINATION

A. Examine walls, floors, and support bases, with Installer present, for compliance with requirements for installation tolerances and other conditions affecting performance of the Work.

B. Prepare written report, endorsed by Installer, listing conditions detrimental to performance of the Work.

C. Proceed with installation only after unsatisfactory conditions have been corrected.

3.2 INSTALLATION

A. General: Install lockers level, plumb, and true; shim as required, using concealed shims.

1. Anchor locker runs at ends and at intervals recommended by manufacturer, but not more than 36 inches o.c. Using concealed fasteners, install anchors through backup reinforcing plates, channels, or blocking as required to prevent metal distortion.
2. Anchor single rows of metal lockers to walls near top of lockers and to floor.

B. Welded Lockers: Connect groups together with standard fasteners, with no exposed fasteners on face frames.

C. Equipment:

1. Attach hooks with at least two (2) fasteners.
2. Attach door locks on doors using security-type fasteners.
3. Identification Plates: Identify metal lockers with identification indicated on Drawings.

a. Attach plates to each locker door, near top, centered, with at least two (2) aluminum rivets.

D. Trim: Fit exposed connections of trim, fillers, and closures accurately together to form tight, hairline joints, with concealed fasteners and splice plates.

1. Attach filler panels with concealed fasteners. Locate filler panels where indicated on Drawings.

E. Fixed Locker Benches: Provide no fewer than two (2) pedestals for each bench, uniformly spaced not more than 72 inches apart. Securely fasten tops of pedestals to undersides of bench tops, and anchor bases to floor.

3.3 ADJUSTING

A. Clean, lubricate, and adjust hardware. Adjust doors and latches to operate easily without binding. Verify that integral locking devices operate properly.

3.4 PROTECTION

A. Protect metal lockers from damage, abuse, dust, dirt, stain, or paint. Do not permit use during construction.

B. Touch up marred finishes, or replace metal lockers that cannot be restored to factory-finished appearance. Use only materials and procedures recommended or furnished by locker manufacturer.

END OF SECTION 105113

SECTION 107516 - FLAGPOLES

PART 1 - GENERAL

1.1 RELATED DOCUMENTS

A. Drawings and general provisions of the Contract, including General and Supplementary Conditions and Division 01 Specification Sections, apply to this Section.

1.2 SUMMARY

A. Section includes ground-set flagpoles made from fiberglass.

B. Owner-Furnished Material: Flags.

1.3 ACTION SUBMITTALS

A. Product Data: For each type of product.

1. Include construction details, material descriptions, dimensions of individual components and profiles, operating characteristics, fittings, accessories, and finishes for flagpoles.

B. Shop Drawings: For flagpoles.

1. Include plans, elevations, and attachment details. Show general arrangement, jointing, fittings, accessories, grounding, anchoring, and support.
2. Include section, and details of foundation system.

C. Samples for Verification: For each type of exposed finish, in manufacturer's standard sizes.

D. Delegated-Design Submittal: For flagpoles.

1.4 CLOSEOUT SUBMITTALS

A. Operation and Maintenance Data: For flagpoles to include in operation and maintenance manuals.

1.5 DELIVERY, STORAGE, AND HANDLING

A. Spiral wrap flagpoles with heavy paper and enclose in a hard fiber tube or other protective container.

PART 2 - PRODUCTS

2.1 MANUFACTURERS

A. Source Limitations: Obtain flagpoles as complete units, including fittings, accessories, bases, and anchorage devices, from single source from single manufacturer.

2.2 PERFORMANCE REQUIREMENTS

A. Delegated Design: Engage a qualified professional engineer, as defined in Section 014000 "Quality Requirements," to design flagpole assemblies.

B. Seismic Performance: Flagpole assemblies shall withstand the effects of earthquake motions determined according to ASCE/SEI 7-02.

C. Structural Performance: Flagpole assemblies, including anchorages and supports, shall withstand design loads indicated within limits and under conditions indicated.

1. Wind Loads: Determine according to NAAMM FP 1001. Basic wind speed for Project location is 95 mph per the IBC 2003 and 2009 CT Supplement.
2. Base flagpole design on nylon flags of maximum standard size suitable for use with flagpole or flag size indicated, whichever is more stringent.

2.3 FIBERGLASS FLAGPOLES

A. Fiberglass Flagpoles: Cone-tapered flagpoles fabricated from polyester resin reinforced with woven glass-fiber roving with 75 percent of glass fibers parallel to length of flagpole.

1. Basis-of-Design Product: Subject to compliance with requirements, provide flagpoles by the following manufacturer’s or comparable product by one of the following:

a. Atlantic Fiberglass Products, Inc.
b. Eder Flag Manufacturing Company, Inc.
c. Ewing Flagpoles.
d. PLP Composite Technologies, Inc.
e. Pole-Tech Company Inc.

B. Exposed Height: 25 feet

C. Construct flagpoles in one piece if possible. If more than one piece is necessary, comply with the following:

1. Fabricate shop and field joints without using fasteners, screw collars, or lead calking.
2. Provide flush hairline joints using self-aligning, snug-fitting, internal sleeves.

D. Sleeve for Fiberglass Flagpole: Glavanized steel foundation sleeve, made to fit flagpole, for casting into concrete foundation.

1. Flashing Collar: Same material and finish as flagpole.

E. Cast-Metal Shoe Base: Made from aluminum with finish matching flagpole,for anchor-bolt mounting; furnish with anchor bolts.

1. Furnish ground spike.

F. Hinged Baseplate: Cast-metal tilting hinged base and anchor plate joined by permanently secured pivot rod. Furnish with stainless-steel screws for securing tilting base to anchor plate when not tilted; furnish with anchor bolts.

1. Finish: Same as flagpole.
2. Furnish aluminum base or aluminum flashing collar finished to match flagpole.
3. Furnish ground spike.

2.4 FITTINGS

A. Finial Ball: Flush-seam ball, sized as indicated or, if not indicated, to match flagpole-butt diameter.

1. 0.063-inch spun aluminum with gold anodic finish.

B. Internal Halyard, Cam Cleat System: 5/16-inch- diameter, braided polypropylene halyard; cam cleat; and concealed revolving truck assembly with plastic-coated counterweight and sling. Furnish flush access door secured with cylinder lock. Finish truck assembly to match flagpole.

1. Plastic Halyard Flag Clips: Made from injection-molded, UV-stabilized, acetal resin (Delrin). Clips attach to flag and have two eyes for inserting both runs of halyards. Furnish two per halyard.

a. Product: Subject to compliance with requirements, provide "Quiet Halyard" flag clasp by Acme/Lingo Flagpoles LLC or approved equal.

2.5 MISCELLANEOUS MATERIALS

A. Nonshrink, Nonmetallic Grout: Factory-packaged, nonstaining, noncorrosive, nongaseous grout complying with ASTM C 1107/C 1107M.

B. Drainage Material: Crushed stone, or crushed or uncrushed gravel; coarse aggregate.

C. Sand: ASTM C 33/C 33M, fine aggregate.

D. Elastomeric Joint Sealant: per Specification 033200 – Site Cast in Place Concrete.

E. Bituminous Paint: Cold-applied asphalt emulsion complying with ASTM D 1187/D 1187M.

2.6 ALUMINUM FINISHES

A. Gold Anodic Finish: AAMA 611, AA-M32C22A43; gold color.

2.7 FIBERGLASS FINISHES

A. Fiberglass: UV-light stable, hard, high-gloss gel coat or high-gloss, high-build polyurethane or polyester coating.

1. Color: White

PART 3 - EXECUTION

3.1 PREPARATION

A. Prepare uncoated metal flagpoles that are set in foundation tubes by painting below-grade portions with a heavy coat of bituminous paint.

B. Foundation Excavation: Excavate to neat clean lines in undisturbed soil. Remove loose soil and foreign matter from excavation and moisten earth before placing concrete. Place and compact drainage material at excavation bottom.

C. Provide forms where required due to unstable soil conditions and for perimeter of flagpole base at grade. Secure and brace forms to prevent displacement during concreting.

D. Foundation Tube: Place foundation tube, center, and brace to prevent displacement during concreting. Place concrete. Plumb and level foundation tube and allow concrete to cure.

E. Sleeves: Locate and secure sleeves in forms by bracing to reinforcement and forms.

F. Anchor Bolts: Locate and secure anchor bolts in forms with templates and by tying to reinforcement.

G. Place concrete, as specified in Section 033200 - Site Cast-in-Place Concrete. Compact concrete in place by using vibrators. Moist-cure exposed concrete for no fewer than seven days or use nonstaining curing compound.

H. Trowel exposed concrete surfaces to a smooth, dense finish, free of trowel marks, and uniform in texture and appearance. Provide positive slope for water runoff to perimeter of concrete base.

3.2 FLAGPOLE INSTALLATION

A. General: Install flagpoles where indicated and according tomanufacturer's written instructions.

B. Foundation Tube: Place flagpole in tube, seated on bottom plate between steel centering wedges, and install hardwood wedges to secure flagpole in place. Place and compact sand in foundation tube and remove hardwood wedges. Seal top of foundation tube with a 2-inch layer of elastomeric joint sealant and cover with flashing collar.

C. Baseplate: Cast anchor bolts in concrete foundation. Install baseplate on washers placed over leveling nuts on anchor bolts and adjust until flagpole is plumb. After flagpole is plumb, tighten retaining nuts and fill space under baseplate solidly with nonshrink, nonmetallic grout. Finish exposed grout surfaces smooth and slope 45 degrees away from edges of baseplate.

END OF SECTION

SECTION 110513 - COMMON MOTOR REQUIREMENTS FOR EQUIPMENT

PART 1 - GENERAL

1.1 RELATED DOCUMENTS

A. Drawings and general provisions of the Contract, including General and Supplementary Conditions and Division 01 Specification Sections, apply to this Section.

1.2 SUMMARY

A. Section includes general requirements for single-phase and polyphase, general-purpose, horizontal, alternating-current, small and medium, squirrel-cage induction motors, installed at equipment manufacturer's factory, and motors shipped separately by equipment manufacturer for field installation.

1.3 COORDINATION

A. Coordinate features of motors, installed units, and accessory devices and features to be compatible with the following:

1. Motor controllers.
2. Torque, speed, and horsepower requirements of the load.
3. Ratings and characteristics of supply circuit and required control sequence.
4. Ambient and environmental conditions of installation location.

PART 2 - PRODUCTS

2.1 GENERAL MOTOR REQUIREMENTS

A. Comply with requirements in this Section except when stricter requirements are specified in equipment schedules or Sections.

B. Comply with NEMA MG 1 unless otherwise indicated.

C. Comply with IEEE 841 for severe-duty motors.

2.2 MOTOR CHARACTERISTICS

A. Duty: Continuous duty at ambient temperature of 40 deg C and at altitude of 3300 feet above sea level.

B. Capacity and Torque Characteristics: Sufficient to start, accelerate, and operate connected loads at designated speeds, at installed altitude and environment, with indicated operating sequence, and without exceeding nameplate ratings or considering service factor.

2.3 POLYPHASE MOTORS

A. Description: NEMA MG 1, Design B, medium induction motor.

B. Efficiency: Energy efficient, as defined in NEMA MG 1.

C. Service Factor: 1.15.

D. Multispeed Motors: Variable torque.

1. For motors with 2:1 speed ratio, consequent pole, single winding.
2. For motors with other than 2:1 speed ratio, separate winding for each speed.

E. Multispeed Motors: Separate winding for each speed.

F. Rotor: Random-wound, squirrel cage.

G. Bearings: Regreasable, shielded, antifriction ball bearings suitable for radial and thrust loading.

H. Temperature Rise: Match insulation rating.

I. Insulation: Class F.

J. Code Letter Designation:

1. Motors 15 HP and Larger: NEMA starting Code F or Code G.
2. Motors Smaller Than 15 HP: Manufacturer's standard starting characteristic.

K. Enclosure Material: Cast iron for motor frame sizes 324T and larger; rolled steel for motor frame sizes smaller than 324T.

2.4 POLYPHASE MOTORS WITH ADDITIONAL REQUIREMENTS

A. Motors Used with Reduced-Voltage and Multispeed Controllers: Match wiring connection requirements for controller with required motor leads. Provide terminals in motor terminal box, suited to control method.

B. Motors Used with Variable Frequency Controllers: Ratings, characteristics, and features shall be coordinated with and approved by controller manufacturer.

1. Windings: Copper magnet wire with moisture-resistant insulation varnish, designed and tested to resist transient spikes, high frequencies, and short time rise pulses produced by pulse-width modulated inverters.
2. Energy- and Premium-Efficient Motors: Class B temperature rise; Class F insulation.
3. Inverter-Duty Motors: Class F temperature rise; Class H insulation.
4. Thermal Protection: Comply with NEMA MG 1 requirements for thermally protected motors.

C. Severe-Duty Motors: Comply with IEEE 841, with 1.15 minimum service factor.

2.5 SINGLE-PHASE MOTORS

A. Motors larger than 1/20 hp shall be one of the following, to suit starting torque and requirements of specific motor application:

1. Permanent-split capacitor.

2. Split phase.
3. Capacitor start, inductor run.
4. Capacitor start, capacitor run.

B. Multispeed Motors: Variable-torque, permanent-split-capacitor type.

C. Bearings: Prelubricated, antifriction ball bearings or sleeve bearings suitable for radial and thrust loading.

D. Motors 1/20 HP and Smaller: Shaded-pole type.

E. Thermal Protection: Internal protection to automatically open power supply circuit to motor when winding temperature exceeds a safe value calibrated to temperature rating of motor insulation. Thermal-protection device shall automatically reset when motor temperature returns to normal range.

PART 3 - EXECUTION (Not Applicable)

END OF SECTION 110513

SECTION 114000 – FOOD SERVICE SPECIFICATION

PART 1 - GENERAL

1.01 Work Included - but is not limited to:

A. Kitchen Equipment Contractor's (KEC) or his designated representative's, work includes, but is not necessarily limited to, the following:

1. Conform to General Requirements - Division 1 as detailed by the Food Service Consultant (FSC).

   a. Provide all applicable options, techniques, supports, and construction materials to meet all current applicable codes.

2. Provide complete Section 114000 - Food Service Equipment Schedule.

3. Carefully examine Drawings and Specifications in all Sections and divisions for information affecting work under this section. Promptly notify Food Service Consultant (FSC) of any conditions, which will adversely affect proper completion of this Section of work and provide proposed adjustments and options. Verify and ensure building access of adequate size for equipment ingress.

4. Provide a competent supervisor for installation of equipment capable of supplying all information required for the proper connection of equipment in this Section and the global completion of installation.

5. Take delivery of all Food Service Equipment and Specially Fabricated Food Service Equipment at the K.E.C. warehouse, unless otherwise authorized by this Section.

6. Install all Food Service Equipment to the limits of allowable license.

7. Provide and install all items that are to be installed in, attached to, and a part of Specially Fabricated Equipment.

8. Provide, manufacture, deliver, and set in place, leveled and left ready for others to make final connections all Specially Fabricated Food Service Equipment. It shall be the responsibility of that contractor doing the final connection not to break, scratch, dent, or mar said equipment or Specially Fabricated Food Service Equipment. If any equipment must be moved to provide final connections, it shall be that contractor's responsibility to see that equipment is re-leveled and re-set properly and left in the same cleaned condition.

   a. The Food Service Consultant and/or Architect shall visually inspect said equipment after notification from K.E.C. that equipment is ready for final connection. In the event any marring, denting, scratching, or other blemishes should occur to said equipment thereafter, the same will be brought to the attention of the General Contractor and or Architect who shall designate responsibility for the repair and/or refinishing and the expense of same.

9. Please note, that it is the Food Service Consultant (FSC) requirement that all equipment shall be devoid of all visible manufacturers' identification, specifications, tags, nameplates, labels, emblems, or any other superfluous item of advertising publicizing the K.E.C. or any service organizations without the express written permission of the Architect and Food Service Consultant.

10. Join, fit, and secure components of equipment that were factory separated for shipment per the details contained herein.

11. Verify model numbers of purchased equipment before committing mechanical and electrical services, final construction and installation, dimensions, locations.

12. Verify and coordinate installation of backing in facility walls with Architect, and General Contractor, in accordance with the details provided herein.

13. Verify and coordinate all architectural requirements for installation of all Food Service Equipment.

14. Provide all necessary hanging supports for exhaust hoods as applicable.

15. Provide and install rubber button feet or other approved protective devices on all items positioned on counters.

16. Provide finishes described for items of equipment and those, which are acceptable to the Food Service Consultant (FSC).

17. Coordinate and cut holes in equipment for pipes, drains, electrical conduits, and outlets as may be required. Provide smooth finish along with sealant and/or grommet

18. Provide and install indirect drain lines in walk-in refrigerators/freezers to be directed at back of insulated panel, properly sloped, and routed along wall to floor drain, attached with stainless steel clips.

19. Provide and install adequate low water cut-off protection for all water heating equipment that would be damaged by a low water condition.

20. Conduit for all data, POS, and communications equipment built-in, or on equipment shall be fabricated as an integral part of the equipment.

21. With Reference To "Buy-out" Equipment: K.E.C. shall provide (8) copies each of "buy-out" equipment illustrated cut sheets with all mechanical details, connections, and specifications of that item which shall be submitted in bound form with the shop drawings. All Cut Sheet Books and Drawings Are To Be Submitted At The Same Time For Review And Approval.

22 K.E.C. shall include all labor, equipment, parts, accessories specified, delivery and freight charges as required, to furnish and set in place all Food Service Equipment specified.

Part 2 - Services:

A. Refer to Base Building Mechanical and Electrical Drawings for nature and origin of water, waste, electrical, gas, steam, and air services this will be provided for by Building Owner to Tenant, for operation of equipment under this section.

1. Verify the following voltages are available:

   120/60/1
   208/60/3
   208/60/1
   230/60/1
   480/60/1
   480/60/3

2. Ground wire is required. Grounding of all equipment must conform to requirements indicated in Division 16.

3. Domestic cold water will be supplied at approximately ____degrees Fahrenheit, ___PSI pressure. Domestic hot water will be supplied at _____degrees Fahrenheit, and ____ grains hardness. Natural gas will be supplied at _____ inches water column maximum. **(TBD By Mechanical Engineer)**.

4. Recirculating industrial chilled water at 90 degrees Fahrenheit.

5. Industrial compressed air at TBD PSI.

1.02 Related Work When Specified Elsewhere - Refer to Project Documents

A. Raised concrete bases and floor depressions: Sections 03.

B. Leveling and finishing of depressed slab for cold rooms: Section 03.

C. Finish carpentry and Millwork: Section 06.

D. Quarry tile: Section 09.

E. Water, gas, steam, and waste services, including trim, traps, shut-off valves as per kitchen notes and details to the fixtures and equipment, except as otherwise specified in individual items: Division No. 15000.

F. Hand sink: Section 15000, except as specified in Section 114000.

G. Drinking fountain: Section 15000.

H. Bumper rails and corner guards: Section 10000.

I. Except exposed ducts specified as part of equipment, all ventilation ductwork including final connections to hoods and ventilators: Section 15000.

J. Electrical services, including wiring and final connections to the fixtures and equipment furnished under this Section and Section 11401; disconnects, etc., as per kitchen Drawing notes and Details; and Owner/User-furnished equipment: Division No. 16000 - Electrical.

K. Secondary support for kitchen exhaust hoods and wall backing for equipment: Section 05.

1.03 QUALITY ASSURANCE

A. Requirements of regulatory agencies:

1. In addition to complying with other legal requirements:

a. All equipment and methods of installation shall conform to the current standards and revisions of the National Sanitation Foundation, Ann Arbor, Michigan, and Building Code and accessibility requirements. [CSBC 1103.1 and ICC/ANSI 804.1].

b. All work and materials shall be in full accord with the latest rules of the U.S. Public Health Service, the National Board of Fire Underwriters, and local Board of Health or state ordinances, the State Fire Marshal, IMC Code updates, The American Society of Mechanical Engineers, AGA, CGA, ANSI, the National Electric Code as it applies to Food Service Equipment, OSHA, USDA and FDA, and any prevailing rules and regulations pertaining to adequate protection and/or guarding of any moving parts or otherwise hazardous locations.

c. All electrically operated and/or heated equipment shall conform to the latest standards of the National Electrical Manufacturers Association, the Underwriter’s Laboratories, Inc., ETL Testing Laboratories, Inc., IMC Codes, where applicable standards have been set up by that agency, or otherwise such as to be acceptable to authorities having jurisdiction.

d. All standard steam-heated equipment shall be manufactured in accord with ASME code requirements and carry the ASME stamp.

e. Whenever the Drawings and specifications require larger sizes or higher standards than are required by the regulations, the Drawings or specifications shall govern.

f. Whenever the Drawings and specifications indicate requirements which will violate the regulations, the regulations shall govern.

g. All applicable equipment shall conform to the current regulatory conditions pertaining to this section.

h. Rulings and interpretations of the enforcing agencies shall be considered a part of the regulations.

B. Reference Specifications and standards:

1. NEMA: LD-3 Application, Fabrication and Installation of High Pressure Decorative Laminates.

2. ASTM: Designations specified.

3. ANSI: F2.1 Food, Drug and Beverage Equipment.

4. ANSI: Z21.20 Automatic Gas Ignition Systems & Components.

C. Manufactured items:

1. All items of standard manufactured equipment shall include the manufacturer's maximum warranty, or be as specified. Catalog number, manufacturers, specific names, etc., used with equipment and materials mentioned in these specifications have been selected to establish the standards of quality and utility required as a guideline by the (FSC), Owner/User.

2. **With reference to substitutions: The equipment specified herein has been carefully selected and approved for this project. The base bid shall be on all equipment as specified and itemized herein. Failure to quote on the base bid as specified shall be considered grounds for rejection of bid.**

3. When more than one manufacturer is specifically named for any item in these specifications, ONLY manufacturers named and specified shall be permitted for this project's Base Bid

4. Substitution of an item shall only be permitted when the Food Service Consultant waives the specification(s) of a particular item(s) in writing allowing a substitute item to be quoted. It shall be the responsibility of the supplier requesting the substitution:

    a. To convince the Consultant and Architect that the proposed item is equal in every way to the originally specified item.
    b. That it is in the Owner/User's best interest to use the proposed substitution.
    c. Provide a plus or minus figure to the base bid for use of the proposed item.
    d. Submit a manufacturer's sheet and all other related data with the proposed item. All proposed substitutions are to be submitted by the supplier separate and distinct from the Base Bid and No Substitutions Shall Be Permitted or Accepted After The Bid Opening.
    e. Should any MEP or any other variation occur to this specification as a result of substitutions or changes to equipment, which is initiated by the K.E.C., the K.E.C. shall bear all costs incurred for re-designing, re-engineering, and/or re-approvals, which become necessary as a result of said substitutions or changes. Furthermore, the K.E.C. shall assume all responsibility that any substituted or changed equipment, the use of which the K.E.C. initiated, performs

equally the standard established by the originally specified equipment. Should such substituted or changed equipment not perform equally to that standard as determined by the Architect and the Consultant, the K.E.C. shall have said substituted or changed equipment removed or eliminated in an expeditious manner as to not effect revenue flow or daily operations. The originally-specified and approved item(s) shall then be supplied and/or installed as required, with all attendants and associated costs being born by the K.E.C. to the approval of Food Service Consultant, Architect, and Owner/User.

f. **Costs for review by Food Service Consultant on Substituted items shall be paid for by the KEC Contractor.**

5. Manufacturer's directions shall be followed in cases where the manufacturers of articles used in this Contract, furnish directions or prints covering points not shown on the Drawings or Specification.

6. Custom-fabricated stainless steel items shall be manufactured by only one United States Company that has minimum of (5) years doing such work, with the exception of the ventilator, for which a different United States Fabricator shall be permitted, if so specified. **Approved Fabricators: Allstate Fabricators, American Food Service, Carbone Metal Fabricators, and Marlo Fabricators. Marlo is the approved serving counter design for the project**

7. Drawings: K.E.C. shall provide (3) copies of dimensioned shop drawings along with (1) CD containing PDF full-size PDF Drawings and Specifications detailing size, material and item # including dimensioned rough-in locations of all MEP connections, each on separate sheets with a schedule showing each item's complete data. Submittals shall be velum or sepia on at least 24" x 36". (1) Copy to remain with General Contractor and Architect. (1) Copy along with CD to be forward to FSC for review and mark-ups. All Mark-ups to be transposed onto CD and returned to K.E.C. with corrections for revisions and printing.

1.04 SUBMITTALS

A. Procedure:

1. Submittals to be provided by K.E.C., and K.E.C.'s designated representative for Food Service Consultant (F.S.C.) and Owner/User's or proper authority, drawings and specifications for review and approval prior to manufacturing or ordering of any equipment on dates identified. K.E.C.'s intention to use subcontractors to perform any area of scope of work must receive prior (F.S.C), Architect approval.

2. Submit in accord with Section 01.

B. Utility service drawings:

1. K.E.C. to review and verify kitchen, as well as facility Contract Drawings, not limited to plumbing and electrical rough-in requirements, ventilation requirements and Base Building works plans. Coordinate with all associated Contract Documents to ensure continuity, and submit any modifications deemed necessary to Food Service Consultant (F.S.C.), Owner/User for approval. Provide certification of review and verification to Food

Service Consultant (F.S.C.)/General Contractor prior to job site below slab utility rough-in installation as applicable.

2. K.E.C. shall verify mechanical, electrical and ventilating rough in and sleeve locations before floor slabs are poured, and walls and ceilings are closed, as applicable. K.E.C. will be responsible for any cost, which may be incurred to make such revisions thereafter.

C. Fabrication shop drawings:

1. Illustrate by shop drawings and detailed description of all items of equipment to be fabricated. Illustrations must be amended or annotated to conform to specifications or as directed by Food Service Consultant and/or Architect.

2. Include all dimensions, materials, components, joint details, assembly methods, finishes, mechanical and electrical characteristics. Indicate maximum load factors for items requiring wall, ceiling, or special floor support. All parts and assembly of each item must support loads without deflection detrimental to function, appearance or safety.

3. Explain in writing any variations from requirements (drawn or specified) shown on shop drawing.

4. Prepare shop drawing at minimum 1/2-inch scale with details and sections at 1/2-inch scale or as requested by Food Service Consultant.

5. Do not proceed with any part of work until shop drawings, rough-in drawings and catalog cuts for that part have been reviewed and approved by Food Service Consultant (FSC), Owner/User.

6. Review of shop drawings and submissions applies to general design only. Errors in dimensions or interference with MEP trades will not in any way relieve K.E.C's responsibility to complete work within intent of design. Food Service Consultant's (FSC) review does not constitute waiver of K.E.C.'s responsibility to carry out design intent.

D. Samples:

1. Not applicable unless requested by the Building Owner.

E. Product data:

1. K.E.C. to submit manufacturer's detailed literature, catalog cuts, and specifications for each manufactured or buy-out item supplied by K.E.C. Include rough in and service information and all details for same.

F. Maintenance data and operating instructions:

1. K.E.C. to provide the following:

   a. System description.

   b. Wiring diagrams.

c. Operating Sequence.

d. Manufacturer's data.

e. Preventative maintenance.

f. Trouble shooting.

g. Warranties.

h. Warranty Service Agency Directory for all items furnished.

i. Valve directory with tag schedule showing location of each valve, type, number, and manufacturer.

2. K.E.C. to compile required operating maintenance data stipulated into individual packages for each item of equipment for Food Service Consultant (FSC), Owner/User files. Identify each package with equipment name and item number corresponding to name and number in equipment schedule. All data shall be incorporated in hardback 3-ring binders. Include a complete list of service agencies for all equipment. Provide one (3) operation manual, and (3) CD maintenance manual or as required by Food Service Consultant (FSC). Submit these prior to commissioning of kitchens.

1.05 PRODUCT HANDLING BY K.E.C.:

A. Procedures:

1. In accordance with Section 01.

B. Food Service Equipment:

1. Uncrate and set in place, level all Food Service Equipment provided by K.E.C. or as stipulated by Food Service Consultant (FSC), Architect.

1.06 WARRANTY OF K.E.C.'S FOOD SERVICE EQUIPMENT AND INSTALLATION.

A. K.E.C. shall, warrant all equipment furnished under this Section for a period of **18 months** from the date of turnover/completion, covering defective materials, design and workmanship unless noted otherwise. Upon receipt of notice of failure of any part of the warranted equipment during the warranty period, the affected part or parts shall be replaced promptly and at the expense of the food service kitchen equipment installer/K.E.C without interruption of daily operations or revenue stream.

PART 2.00 - PRODUCTS

2.01 ACCEPTABLE MANUFACTURERS

A. As indicated in this Section.

2.02 MATERIALS

A. Materials for fixed surfaces to be impervious to moisture, corrosion resistant, smooth and easily cleaned.

B. Stainless steel to be type 304-18/8 with #4 finish unless indicated otherwise.

C. Thickness of sheets and tubing are in gauges. All tubing to be 16 gauge wall thickness; sizes shown are outside diameter and face.

D. Sound deadening under all stainless steel tops to be latex sound deadener 1/8" thick, gray, rigid, waterproof insulation. Material available from: Component Hardware Group, Inc., 1890 Swarthmore Ave., PO Box 1582, Lakewood, N.J. 08701, or approved equal.

E. Hardware:

1. All hardware components must be highly polished chrome-plated, heavy-duty Kason or Component Hardware Group, Inc., or approved equal. Movable components to be lubricated in accord with manufacturer's requirements.

2. Identify hardware with manufacturer's name and number so that broken or worn parts may be ordered and replaced.

3. Catches to be either concealed, self-aligning floating magnet, or friction type, solid brass with stain nickel finish, or rustproof steel balls and springs with set screws for adjustable tension. Magnet holding power of 30 lb. minimum.

4. Refrigerator door and drawer:

   a. Hinges: Self-closing, 90-degree hold open, adjustable chrome-plated.

   b. Handle: Heavy-duty magnetic edge mount latch with breaker action.

   c. Drawer slides: Full extension, 14 gauge stainless steel with stainless steel bearings and rollers.

   d. Drawer pull: Recessed stainless steel with framed beveled edge.

   e. Magnetic gaskets with molded sanitary corners around perimeter of door and drawer. Provide stainless steel face on refrigerator cabinet.

5. Pilaster strips for adjustable shelves: 16 gauge stainless steel 3/4 inch wide, slots for 1/2-inch adjustment.

F. Casters:

1. Acceptable manufacturers are Colson, Darcor or approved equal.

2. Custom-fabricated equipment to be fitted with casters from only one manufacturer. Minimum mass rating of 800 lb. Per set of four. Adaptable for tubular legs or base frames.

3. Unless otherwise noted, wheels shall be metal disc type with Delrin bearings and neoprene or polyolefin tread, 6-inch diameter (or standard size of purchased equipment), and without thread guards. Minimum 1 inch tread width.

4. Swivel bearings shall be sealed ball or roller bearing. Brakes and wheel locks or other accessories must be provided as noted.

5. Casters on equipment which are to be used for freezer storage shall have suitable tread and lubricant to withstand temperature differentials.

G. Bumpers:

1. Must have metal insert support and exterior casing in 16 gauge stainless steel. Secure bumpers on purchased or fabricated mobile equipment at identical height.

2. Corner bumpers to be Colson #6927, or approved equal fastened to equipment with stainless steel screws. Seal all exposed gaps.

3. Wrap around bumpers to be Colson #6915or approved equal set into stainless steel channel, fastened to equipment with stainless steel screws. Seal all exposed gaps.

4. Insert neoprene buttons in housings or bodies to soften noise on drawer or door closing.

H. Castings:

1. Castings to be rough ground, polished, buffed to bright luster, free from fit marks, runs, checks, burrs, and other surface imperfections. Low nickel contact, white metal that yellows on exposure to atmosphere will not be accepted.

2. Sanitary bullet type feet of stainless steel with internal adjustment of 1-1/4 inch as manufactured by Component Hardware Group, Inc., Model A10-0851, or approved equal or flanged foot Model A10-0854 if specified.

I. Clips:

1. Shall be stainless steel.

J. Sealants:

1. All sealants to be a one-part silicone type, tack-free in less than 1 hour with complete cure achieved any gaps no larger than 1/4-inch depth in less than 24 hours. Sealant must not significantly alter its properties after this initial 24-hour period. Any gaps larger than 1/4-inch will require stainless steel trim extension to meet USDA and NSF codes.

2. Sealant to remain flexible and resistant to damage from all normal environments of a commercial kitchen. It must not support growth of bacteria, mold or fungi, or discolor and have a peel strength of not less than 15 lb. per square foot.

3. Sealant shall be clear or an (FSC) approved color to match surrounding surfaces. Apply in accord with manufacturer's recommendation for a smooth-seamless and uniform finish. Use USDA-approved for application in a Food Areas.

K. Electrical components:

1. Provide new and first quality electrical materials complying with IMC Code and in accord with components supplied under Division 260000.

2. Provide waterproof panel boards with circuit breakers properly sized and identified. Include two 20-amp spare breakers in each panel board. Face of panel must be readily accessible behind stainless steel hinged enclosure door of a compartment which must be insulated from local heat. Panel board shall have appropriate rating for environment in which it is installed. Circuit breakers and panel boards shall comply with Division 16.

3. Equip three-phase motors with magnetic starters with thermal overload protection on each of the three phases.

4. Equip single-phase motors of fractional horsepower rating, and those ranging up to and including 0.746 kw with manual starters with overload protection.

   a. Motors rated over 0.746 kw shall have magnetic starter with overload protection.

5. Provide all lighting fixtures for designated equipment with lamps and controls or switches wired to an easily accessible common junction box for power connection. Control circuits to be 120V maximum.

6. Equip all portable and mobile electrical equipment with cord and plug suited to electrical characteristics and outlets specified for equipment. Include grounding conductor in cord.

7. Provide and install transformers as required for all equipment whose supply voltage is not compatible with building electrical systems.

L. Plumbing components:

1. Provide control valves and faucets, pipe fittings, waste and tail pieces, etc., that are brass chrome-plated, bright finish, new, best quality, and which comply with applicable codes. Valve handles must be of nonconductive materials.

2. Inset type sinks: 14 gauge stainless steel fully welded into stainless steel counter top.

3. Faucets:

a. Deck mounted mixing faucet for hand sink to be Fisher Model 3510, or approved equal with 6-inch swing nozzle and non-splash aerator.

b. Splash mounted mixing faucet for 3-compartment sink to be Fisher Model 5414, or approved equal with 14 in. swing nozzle.

c. Splash mounted mixing faucet for 2 compartment sinks to be Fisher Model 29238, or approved equal with 14-inch nozzle and non-splash aerator.

d. Pre-rinse unit to be Fisher Model 34398, or approved equal splash-mounted with internal check valve and wall bracket.

e. Single filler faucets when specified or shown for hot food wells, Bain Maries, and steam tables to be Fisher Model 3011, or approved equal with 8-inch swing spout and non-splash aerator.

f. All faucet assemblies to be polished chrome plate.

4. Sink Waste:

a. All custom fabricated and die-drawn sinks: Rotary type waste outlet with one-piece connected overflow assembly and stainless steel removable basket strainer.

b. Bain Marie: 1 inch stainless steel corner drain with nickel-plated brass overflow tube.

M. Clearly identify all valves, switches, and controls by means of a nameplate. Nameplate to be blue back/white letters or black back/white letters lamicoid with beveled edges and 1/4-inch high minimum, white, engraved letters. Cement nameplates to equipment in a conspicuous location. Color as selected by (FSC).

N. Miscellaneous: Cutting boards to be removable and reversible, 1/2 inch white, sanitary, plastic material (nonporous), and dishwasher safe. Board to have 3 inch x 1 inch elongated slot to serve as a handle. Mount in stainless steel slides with Backstop.

2.03 EQUIPMENT

A. Manufacturer's equipment identification: Please note that it is Food Service Consultant (FSC) requirement that all equipment which will be exposed shall have equipment devoid of all visible manufacturer's identification.

B. Provide only new and unused equipment of recommended (as applicable) manufacturer's current production and specification.

C. Provide equipment standard design and finish to equal best standards of industry.

D. Gas equipment as applicable:

1. All material shall be in accord with AGA standards.

2. Equipment shall be equipped with the following devices:

   a. Automatic igniter approved by AGA for open burners.

   b. Pilot light and thermal control for oven burners or any other hidden burners.

   c. Stainless steel discharge flues with deflector for combustion gas.

3. Connection valve type one-quarters turn shall be fitted near cooking equipment. These connections shall be made of brass quick disconnect as provided by Dormont Mfg. Co., or approved equal.

E. Steam equipment as applicable:

1. Steam generators shall be gas type with blades and burners in ductile iron.

2. Equipment shall permit cooking with or without pressure.

3. Water supply softened to 7 grains hardness.

4. Equipment shall be equipped with over-pressure safety devices.

2.04 CONNECTION TERMINALS

A. Connections terminals as applicable:

1. All equipment shall be complete with connection terminal as standardized by equipment manufacturers except when specified to the contrary in the itemized specifications. It shall be the responsibility of the Kitchen Equipment Contractor (K.E.C.) to provide any and all required adapters to assure the proper

connection to the conditions at the job site. Verify connector type with Food Service Consultant (FSC) and General Contractor.

a. Provide electrical receptacle to match non-standard 120V plugs and all 208V plugs and receptacles for equipment provided with cords and plugs.

2. All gas-fired counter appliances specified with flex connectors are to have Hansen Gas-Mate couplings or approved equal in the proper size for each appliance. Socket #100-100 series with #101-000 duct cap is to be mounted on the equipment with threaded extension for plumber to connect to gas line. Appliance is to be equipped with Dormont, or approved equal, heavy-duty, commercial-type, flexible metal connector with plug #100-500 series to match socket.

3. Counter top or built-in appliances requiring a water connection are to have Hansen series #HK quick-connecting, or approved equal, two-way shut-off couplings in stainless steel, in the proper size for each appliance. Socket with dust cap is to be mounted on equipment, with provision for connection by plumber. Provide matching plug and stainless steel braided Koroseal tubing connection with appliance, or approved equal.

4. Portable, gas-fired equipment specified with restraining cable, hose and quick disconnect is to have Dormont #RD-6 or approved equal cable secured to wall and equipment with swivel-type ring fittings. Cable to allow equipment to be moved without damaging hose/quick disconnects. Hose and quick disconnect to be Dormont Mfg. Co., or approved equal, Series #SSC-1600-BPQ with proper I.D. to match equipment. Verify length(s) required with job site conditions.

5. Water cooled equipment specified with hose/disconnect to be Dormont Mfg. Co., or approved equal, Series W-BP2Q with proper I.D. to match equipment. Verify all length(s) required with job site conditions.

2.05 FABRICATION

A. General requirements:

1. Fabricated equipment to be all stainless steel construction unless otherwise specified. Provide all fabrication in accord with NSF standards.

2. Fit and assemble work in shop where possible. If site access restricts size, make trial assembly in shop. Refer to 1.01,3 as it applies.

3. Permit inspection of fabricated equipment before shipment to verify conformance with Contract document by Food Service Consultant (FSC), Owner/User, if required.

4. Welding to conform to highest industry standards. All exposed welds shall be continuous, filed, or ground flush and smooth, and polished to match adjacent surfaces.

5. Electric, seamless method. Use low carbon filler rod with

non-carbonaceous flux with sufficient chromium and nickel so deposited metal and original metal have same composition.

6. Workmanship shall be clear of pits, cracks, discoloration, and other mechanical imperfections.

7. Invisible butt-welded joints, including field welding, to be properly jigged and ground smooth. No raw, sharp, or rough edges accepted.

8. Butt joints made by spot welding or riveting straps under solder filled seams and puddle welds are not acceptable.

9. Close ends(s) of all hollow sections; i.e., tubes, hat channels, etc.

10. Finished equipment to be absolutely straight, true, level and rigid with the requirements of the details and specifications being a minimum.

11. All fastenings and fittings such as bolts, metal screws, lock washer, nuts, cotter pins, and mounting brackets shall be stainless steel with polished heads where exposed. Wherever possible, conceal fastenings, but where necessary at exposed surfaces, use truss or countersunk flat heads. Pop rivets are not acceptable.

12. All straight lengths shall be one piece throughout, with all seams, including field joints, continuously welded. Radiuses corners must be welded and polished to match original finish.

13. Conceal joints and connections wherever possible. Intermediate joints between supports not acceptable.

14. Provide concealed stainless steel frame for all equipment indicated with fully welded construction.

15. Die stamp all openings in cabinets or tops for connection of plumbing, steam, and other services. Recess sink wastes and provide raised openings for pipe fittings to counter-mounted equipment. Flush fitting, access plates to be installed in curb-mounted cabinets where access to hub drains is required.

16. Insulate where necessary to prevent electrolysis between metal to metal, and corrosion between metal to masonry or concrete.

17. Isolate rotating or reciprocating machinery to minimize noise and vibration.

18. Furnish food service equipment completely wired internally using wire and conduit suitable for a wet location, including a grounding wire. Chrome plate all exposed conduit. Properly rate and ground all receptacles.

19. Cast aluminum electrical outlets boxes specified as part of fabricated equipment shall be as manufactured by Component Hardware Group, Inc., Model R58-1010 and R58-1020, or approved equal, appropriate for use.

20. Terminate wiring within equipment at panel board or junction boxes with wires identified by item number and load.

21. Terminate wiring for motors in a disconnect switch within 36 inch of equipment to be controlled, and between 5 feet and 6 feet above floor unless otherwise specified.

22. Provide casters on all wheeled equipment.

23. Verify size and location of all duct connections required for hoods, prior to fabrication, with Architect/Mechanical Engineer or other approving authority.

24. Recess or otherwise protect all controls, valves, and switches on equipment where they protrude or are subject to damage.

B. Tops:

1. 14 gauge stainless steel reinforced as required with 14 gauge galvanized channels complete with sound deadening material in accord with Paragraph 2.02.D.

2. Reinforcing required on centerline of top with cross members at not more than 24 inches center. K.E.C. to verify reinforcing is capable of supporting counter equipment without deflection.

C. Edges:

1. See Standard Details.

D. Splash backs:

1. See Standard Details.

E. Legs and braces:

1. All of 1-5/8 inch outside diameter stainless steel tube.

2. Leg spacing maximum 5 feet apart and 30 inches front to back.

3. Cross brace legs in pairs and longitudinal brace at front center and back to suit requirements. All set at 10 inches above floor minimum.

4. Braces to have continuous weld to legs, polished with minimum reduction in volume.

5. Legs for tables: Stainless steel sockets channels welded to stainless steel of inverted "U" shaped 4 inches wide x 3/4 inch deep x 14 gauge. Flanges angled back or rounded at each end. Channels to be welded to underside of tabletop.

6. Leg sets for sinks: Socket to be Component Hardware Group, Inc., Model A20.0206 stainless steel sockets, or approved equal, welded to bottom of sink.

7. Feet to be stainless steel adjustable plus 5/8 inch and minus 5/8 inch.

F. Kick plates:

1. Provide kick plates where specified of 16 gauge stainless steel with galvanized iron backing and secured to equipment, easily removed. Seal to floor.

G. Shelves:

1. Solid Shelves: All of 16-gauge stainless steel construction, with 14 gauge triangular brackets.

2. See Standard Details.

3. Wire shelves: Mainframe 3/8-inch diameter rod, lateral wires 3/16 inch diameter on 1 inch centers heavy-duty chrome-plated or stainless steel as specified in individual items.

4. Removable sections maximum 24 inches long.

H. Angle slides:

1. All of 16 gauge stainless steel minimum construction.

2. Slides of 2 inch x 2-inch section, length to suit. Leading corners rounded, fully welded to supports on vertical edge.

3. Supports of stainless steel square tube, ends filled, or 1/4 inch x 1-1/2 inch stainless steel bar. Locate in units on keyhole slot and stainless steel plug.

4. Provide backstops to limit travel of pans.

5. Ensure that pans or trays will not turn and fall between universal slides.

I. Drawers:

1. See Standard Details.

2. Sizes as follows, unless specified otherwise:

Small	-	12 x 20 pan, 4 inches deep
Medium	-	24 x 20 pan, 4 inches deep
Large	-	24 x 20 pan, 8 inches deep

3. Provide full extension heavy-duty drawer slides with a load capacity of 125 lb. at an 18-inch extension.

4. Double pan front 16-gauge stainless steel all welded and sound deadened with integral pull.

5. Carrier frame, 16 gauge stainless steel channel sides and back, welded to front.

6. Guide frame, 16-gauge stainless steel channel welded to housing.

7. Sheaves are 4-1/2 inch diameter nylon type roller bearing.

8. Safety catches of stainless steel to prevent assembly separating.

9. Housing of all 18-gauge stainless steel channel back and sides. Corners welded and polished. Front opening with box edges.

10. Liners to be removable with drawer fully extended, equal to standard Manufacturer's specifications below or approved equal.

    a. Plastic: US Royalite CPA 1374.

    b. Plastic: US Royalite CPA 1375 divided.

    c. Plastic: US Royalite CPA 1379 deep.

    d. Stainless steel: Klein SDP 20.

11. Lock hasps: See Standard Details.

12. Bread drawer to have three air vents with stainless steel fine mesh screen.

J. Work Tables:

1. Tops of 14-gauge stainless steel cut out for sink bowls, etc. reinforced as required with 14 gauge galvanized channels.

2. Work table with sinks have dished and marine edge, unless otherwise specified.

3. Reinforcing channels or saddles not to be exposed below edges.

4. Legs and shelving as specified.

K. Sink bowls and drain troughs:

1. All of 14 gauge stainless steel polished inside and outside, where exposed, integrally welded into tops.

2. Round corners of 3/4 inch radius in all vertical and horizontal corners, all welded. Solder not accepted

3. Bottoms drawn, not creased to drain hole.

4. Drain hole at lowest point to suit type of waste specified for item.

5. Sound deadening compound as specified under tops and multiple sink bowls.

6. Multiple sinks to have 18-gauge stainless steel front apron over full length of bowls. Island units to have apron on both sides.

7. Faucets as specified in Paragraph 2.02. L.

8. Drain troughs width as specified x 1 inch deep, all welded, radius cornered and pitched to drain.

9. Anti-splash inserts of expanded stainless steel in 1 inch x 4 inch wide and length as shown on drawings with lift out holes or handles.

L. Sliding and hinged doors:

1. Construct of 18-gauge stainless steel double pan 3/4 inch thick filled with fiberglass. Not to exceed 36 inches long.

2. Sliding doors self-closing on stainless steel track. Adjustable hangers with nylon tires and stainless steel roller bearing sheaves.

3. Bottom guides stainless steel, easily moved for removing doors without use of tools.

4. Integral stainless steel pulls. Sliding door handles to be an integral part of door and to be full height of door.

5. Hinged doors hung on lift off type stainless steel hinge or pivot hinge as specified.

6. Bumper buttons and heavy duty catches as specified.

7. Doors shall open freely with necessary clearance in accord with finishes. Misalignment of top and bottom edges shall not exceed 1/8 inch when doors are closed

M. Heated counters (155° - 165° F):

1. Top 14 gauge stainless steel box edges.

2. Cupboard fully insulated with fiberglass 1/2-inch thick, stainless steel enclosed.

3. Sliding doors.

4. Fixed bottom shelf.

5. Removable intermediate shelf-perforated, as specified.

6. Heater strips.

7. Control and pilot light in recessed panel, identified.

8. Legs.

9. Three stainless steel wire shelves per door section, removable without removing door, as specified.

N. Bain Marie

1. One-piece stainless steel well, size as specified, insulated with galvanized steel enclosure.

2. Bain Marie heater sized for 750 watts per square foot.

2. Threaded stainless steel drainpipe, each manifold in multiple installation to a common drain line. Provide quarter turn ball valve in drain line.

4. Thermostat, with infinitely variable heat control and pilot light.

5. Mounting gasket kit.

6. Infrared light tubes or elements with high-intensity display light, as specified.

7. Remote On/Off switch as specified.

8. Stainless steel mounting to permit adjustment of coverage angle.

O. Heater strips:

1. Rust-resistant sheaths of sufficient watt density to maintain specified temperatures.

2. Infinite control mounted on shelf face. Controls for multiple units to be banked, but not individually controlled.

3. Removable stainless steel enclosure.

P. Refrigerated counters (35° F)

1. Top 14 gauge stainless steel box edges.

2. Body 18 gauge stainless steel exterior and interior #4 satin finish, all welded with cabinet front cut and formed for door openings from a single sheet. Inside horizontal corners formed on a 3/4-inch radius.

3. Insulated with 2 inch thick, continuous, closed cell type insulation to completely fill cavity. R34 factor, nontoxic.

4. Thermal separating breaker stripes effectively concealed. Provide heater wires as necessary.

5. Blower coil or fin strips of required capacity. Conceal drain line at back of cabinet.

6. Adjustable wire shelves or tray slide units as specified.

7. Interior light, with bulb and door activated switch.

8. Doors 20 gauge stainless steel double pan fully welded with 2-inch thick, continuous, closed cell insulated with an RSI factor of not less than 1.74.

9. Door hardware in accord with hardware refrigerator door Specification (self-closing tendency.)

10. Refrigeration system as described. Remote or self-contained.

11. Compressor housing for self-contained units to be 16-gauge stainless steel open construction for maximum air movement and access.

12. Ventilated access panel of stainless steel 'egg crate' in 18-gauge stainless steel channel frame with welded and polished corners. Set in top channel with locating studs at bottom.

13. Wire shelves in accord with shelf Specification.

14. Equip refrigerated counters with a dial thermometer mounted on apron.

15. Wherever cut-outs for pans are indicated in top of under-counter refrigerators, furnish complete with stainless steel flattened expanded metal guard, 6 1/2 inches below top, full length and width of opening, and turned up to underside of interior top on all four sides

    a. Provide counter top at perimeter of opening with continuous 1/4-inch minimum raised beaded edge. Include spacer bars as required.

Q. Enclosed cabinet type bases:

1. Made of formed sheets reinforced to create a rigid structure. All unexposed sections, upright partitions and back shall be 18-guage stainless steel or heavier, except as specified otherwise.

2. Exposed body facings, partitions, stiles and aprons shall be 18-gauge stainless steel.

3. Shop welds all seams and joints where possible. Ground welds smooth and polish welds to match original finish. Faces to be all-flush welded.

4. Finish ends of all fixtures, splash-backs, shelves, etc., flush to walls or adjoining fixtures.

5. Provide access holes in panels in equipment to allow plumbing and electrical trades to make their respective connections. Deburr all holes.

6. Coved corners:
   a. Provide all dish tables, drain tables, work tops, splash-backs, turned-up edges with radius bends on all inside horizontal and vertical corners, and coves at intersections.

   b. Provide all shelves, under-shelves, elevated shelves, pot shelves, etc., with turned-up edges and radius bends on all inside horizontal corners.

   c. Unless specified otherwise in individual items, provide rounded and coved corners or radius ends of 5/8 inch radius or larger.

R. Refrigerated display case:

1. Base cabinet in accord with specification.

2. Display case shall be constructed of 1 inch square stainless steel tubing, all welded and polished. Display case top and side panel shall be of thermo pane glass. Shelves shall be heavy-duty stainless steel wire supported on heavy-duty stainless steel angle clips welded to stainless steel tubing frame.

3. Hinged doors on public side shall be armor-plated glass pivoting off 1/2 inch x 1/8 inch diameter stainless steel top edging. Handle shall be full length pull type. Each compartment to suit trays to be used on this project.

4. Sliding doors on service side shall be thermo pane glass with stainless steel bindings on all edges with self-closing track and rollers to ensure quiet operation. Provide rubber bumpers at door closures.

5. Stainless steel wire shelves to be removable without removal of sliding hinged door.

6. Lights shall be full-length across each shelf at public side of display case. Bulb shall be color corrected and shielded, with ballasts and starters located in accessible insulated compartment.

7. One thermometer in degrees Fahrenheit. Dial type, flush-mounted (and protected) on service side.

8. Install a two-way blower coil with ducts to efficiently force air through vents into display case and maintain a temperature of 37° F in all parts of display case and base.

S. Service chase:

1. Free-standing service chase shall be 18-gauge stainless steel fully welded floor to ceiling, or as shown on kitchen Drawings. Chase shall have one side removable for access to services, secured with round head stainless steel screws. On 6 inch centers. If a chase is for gas, water, and electric, provides separate section for each utility with solid protection divider. Gas chase to be ventilated. Fix chase per Standard Detail.

2. Service chase on island units shall be secured to counter top and finish 3 inches above finished ceiling with 1 inches stainless steel angle finishing collar.

T. Protective wall coverings as applicable:

1. Stainless steel panels, thickness 18 gauge, quality 18/8, installed vertically on walls or partitions and located behind cooking units. They shall be fixed to wall with appropriate adhesive and butt straps. Paneling shall be with flat but joints. Silicon sealants shall be installed at joints between panels and walls. Heights to be taken into account are distance between top of quarry floor base tile and bottom of exhaust hood. All corners are to receive “wrap around” application with no corner joints or seams allowed.

2. Top of panels to extend minimum 1 inch up behind dropped ceilings, cosmetic enclosures, or hoods.

3. Flat butt joints and panel vertical end to be covered with 2 inches wide stainless steel butt straps.

U. Hand-wash basins: (Unless indicated otherwise)

1. Top shall be of stainless steel 18/8 with non-dripping edges, with a pressed bowl equipped with an overflow and a chromed brass trap.

    a. Cold and hot water goose neck faucet.

    b. Stainless steel apron, 18/8, 12 inches high.

    c. Front hinged panel, 18/8 (for knee-controlled faucet).

    d. Backing, 24 inches high, with a bent and folded edge, provided with an approved Owner/User liquid soap dispenser.

V. Dishwasher:

1. Dishwasher shall be made of stainless steel, 18/8 rack, or conveyor type. Type, function, and hourly output of various machines shall be deemed appropriate, as demand requires per space supported.

2. Machines shall be provided with the following options (obligatory):

a. Steam extraction hood to be connected by welded stainless steel duct connected to extract ductwork above false ceiling, provided by HVAC, contractor, approved by building official.

b. Booster heater to 180° F (supply to machine is softened hot water At 140° F, 7 grains hardness).

c. Electrical panel board, with disconnect or and On/Off button.

d. Auto shutoff switch for Condensate Fan..

3. Prior to manufacturing, ensure proper access to each facility. Provide machine in separate components and remount on-site if necessary.

4. All security elements shall be integrated or supplied with machine (control boards, electricity, security, lack of water indicator, alarm heater, automatic start command, emergency stop push-button, etc.).

a. Machines shall be equipped with a distributor for detergents and rinse products, per "Owner/User/Ed Connection" specifications.

W. Floor Trough:

1. If custom trough is specified, the whole of trough shall be supplied by (K.E.C.) and handed over to plumbing or tiling contractor for installation and sealing in.

2. Trough shall be stainless steel type with a longitudinal and lateral slope. They shall be equipped with a removable bell type siphon with a fastening flange, and a stainless steel, non-slip grating with maximum mesh size 3/4 inch x 3/4 inch, IMC/Teddy, or an approved equal.

3. Dimensions (length, width, and depth) and quantities shall be as indicated.

2.06 Exhaust Ventilators

A. Acceptable manufacturers:

1. Halton Manufacturing is listed as specified by Food Service Consultant (FSC), Architect. The following alternate manufacturers, Avtec Products, Gaylord Industries, and Ventmaster may be used, provided they meet the performance criteria of the specified hoods.

PERFORMANCE CRITERIA:

Alternate manufacturers shall submit performance data for the alternate system based on design criteria for the specified manufacturer and must meet the performance requirements and efficiencies as outlined in this specification. Requests for approval must include alternate manufacturers exhaust airflow calculations based on the convective heat load and input power of cooking equipment beneath each hood. Performance data shall be validated and confirmed based on testing in accordance with the most current ASHRAE

approved Standards (ASTM F1704-05 “Capture & Containment”, ASTM F2474-05 “Heat Gain to Space”, and ASTM F2519-05 “ Grease Filter Extraction Efficiency”). Alternate manufacturers shall include thermal imaging results to validate conformance to project specification. Make up air will be calculated so that the same amount of air will be taken from the zone as is required by the specified system. An additional load cannot be placed on the kitchen HVAC system. Alternate manufacturer must provide a written guarantee of performance, ensuring the specifying engineer that the system will perform to the engineer’s satisfaction when installed and balanced according to design exhaust air flow

rates. Engineer reserves the right to reject any system which does not meet the performance requirements or efficiency of the specified system. Rejected system must be replaced with specified system, with all replacement costs paid by manufacturer of rejected system. Any changes in the specified sizing of ductwork, power wiring or gas lines due to the use of any system other than that which is specified is the responsibility of the alternate hood manufacturer, and must be coordinated by the hood manufacturer and kitchen equipment contractor.

B. General:

1. Ventilators of manufacturer shall be box type canopies, as drawn and shown on the elevation drawings/and designated under individual item number specified. Make up air to be the Capture Jet KVE Series

C. Construction:

1. Units fabricated of # 18 gauge, 302/304 stainless steel with all exposed surfaces polished to a No. 4 finish. All joints and seams shall be welded and/or made watertight. Provide integrally welded hanger brackets at front and rear of canopy. Ventilators shall be constructed to extract 93% grease-laden air through full length, built in, grease extraction filters utilizing centrifugal force. Exhaust plenum shall be easily accessible for inspection.

D. Automatic damper assembly:

1. Typical: Ventilator shall have a mechanically operated automatic fire damper. Activation shall be spring operated by a 280° F fusible link. Damper is held in open position till the melting of the fusible link. At each duct opening and damper assembly there shall be a 280° F thermo switch all per requirements and logic as set forth and specified under the architects/mechanical engineers control panel specified herein.

E. Light fixtures:

2. Recessed florescent, four foot long or recessed incandescent light fixtures shall be employed. Refer to item number specification for desired type fixtures. Fixtures of either type shall be factory installed and pre-wired to a common junction box. If surface mounted fixtures are specified provide shatterproof globes. Lamps shall be provided by Kitchen Equipment Contractor unless otherwise specified.

F. Approvals:

1. Each ventilator shall be approved and/or listed in accordance with latest IMC, UL, BOCA, ICBO, UMC, NSF, and NFPA 96 standard. In addition, each ventilator and control panel shall conform to all current and applicable State and/or local codes as required.

G. Model numbers:

1. See Individual Line Items. Grease extraction shall be not less than 95%.

H. Surface fire protection:

1. Ansul R-102 suppression: Piping in the ventilator is to be pre-piped at the factory using closed type heads at termination points. All piping is to be stainless steel where exposed, sized as necessary to suit conditions. Quartz heads shall be set for temperature as required for appliance located below. System to meet UL 300 Standards.

2. K.E.C./Ventilator manufacturer shall provide automatic, gas shut off solenoid valve loose and associated piston kit, micro switches, and all other components required with their equipment for installation in gas line by plumbing contractor.

I. Panel Logic:

a. Volt free contacts in ventilator control panel close to signal remote fire alarm or as may be required by governing authorities.

2.07 WALK IN REFRIGERATORS

A. Description:

1. Modular sandwich panel cold storage rooms. Provide sizes shown on Food Service Consultant (FSC) drawings and approved by latest N.S.F. Standard, and bearing the N.S.F. Seal of Approval affixed to the interior door pan, Underwriters Laboratories Inc. Include the following:

2. Wall, corner and ceiling panels.

3. Partition and tee panels.

4. Floor panels.

5. Door(s) and finish hardware.

6. Light switch assemblies.

7. Light fixture(s).

8. Temperature alarm system(s).

9. Finish trim.

10. Closure panels, except where otherwise specified.

11. Evaporator supports.

12. Utility penetrations.

13. Escutcheon plates.

14. Digital thermometer(s).

15. Evaporators drain line conduits.

16. Deadbolt Lock

17. Exterior ramp

18. Strip curtain

19. Remote Condenser to be roof mounted – Refer to Architectural Drawings.

B. Related work specified in other sections:

1. Subfloor, wearing floor and cove base: Various Sections.

2. Exterior grout and cove base: Various Sections.

3. Electrical service connections for:

   a. Lights and switches, installation: Division No. 16.

   b. Heater cable at freezer door(s).

   c. Temperature alarm(s).

4. Sealing or caulking utility penetrations.

5. Floor sinks or drains: Division No. 15.

C. Materials:

1. Insulation: Preformed rigid closed cell, urethane foam, non-burning 1.7 to 2.5 lb. density fluorocarbon blown, fully aged. Thermal conductivity shall not exceed .15 BTU/hr./sq. ft./F. in a mean temperature of 70 degrees F. Urethane shall conform to FS HH-1-00530, Type III, Class 2.

D. Panels:

1. Wall and ceiling panels: Modular sandwich panel design based on laminated construction principle as defined in ASTM C274 or latest method.

2. Provide corner panels of matching one-piece construction.

3. Partition panels: As specified for wall panels. Provide “T” shaped panels, matching the corner panel construction, intersection of wall and partition panels.

4. Seal panel joints with continuous odorless, non-toxic, synthetic polymerized sealant applied to both sides of panel edges.

5. Provide lateral alignment of adjoining panels with continuous spline and groove.

6. Panels shall be rigidly coupled by cam action locks, maximum 4 ft. 0 in. O.C. Finish lock ports with snap-in buttons. Secure panels to floor, plumb, level and true.

8. Maximum deflection of ceiling panels shall not exceed 1/240 of the span under a loading of 20 lbs./sq. ft. if ceiling spans require a support system, submit details and structural calculations to Food Service Consultant (FSC) for review prior to fabrication.

E. Panel fascia:

1. Clad exposed interior wall panels and ceiling panels with white pre-painted stucco-Aluminum, minimum .040. Stainless Steel #3 finish exposed exterior.

2. Clad unexposed exterior with Galvanized steel, minimum 26 gauge stucco.

3. Panel gaskets to shall be impervious to stains, grease, oils, and mildew. Flexible vinyl gaskets shall be foamed-in-place on the interior and exterior edge of the”tongue” rail.

F. Floor:

1. Floor Panels, 16-gauge stainless steel. To accept uniformly distributed loads of 700 lbs. per square foot. All edges and corners to be coved in accordance with latest NSF Standard.

2. When identified mortar set quarry tile floor and cove base will be installed by the tile trade. Coordinate all efforts with General Contractor.

G. Cold storage doors:

1. Sizes: 3 ft. 0 in. X 6 ft. 6 in. Except where otherwise indicated.

2. Type: Flush in fitting, insulated with 4 in. Urethane, as specified.

   a. Provide the ambient face of each freezer door panel and door jambs with 115 volt, 500 watts, electric resistance heating element, including thermostatic control, factory wired to “GS” splice box, located above door at interior face of wall panel.

3. Face front, back and edges of door with flat stainless steel sheets 20 gauge type 304, No. 4 finish.

4. Heliarc weld corners of door pans grind smooth and polish.

5. Gaskets: Extruded polyvinyl chloride with vulcanized corners and continuous magnetic core at sides and head of door.

6. Sill wiper: Extruded neoprene secure by removable stainless steel retainer strip and stainless steel fasteners.

7. Threshold finish floor reference and divider: Formed section of 14 gauge stainless steel, type 302, No. 2B finish.

8. Hardware: Chrome plated. Latch shall have provision for padlocking. Provide inside safety release for each door.

9. Accessories: Provide the following:

   a. Kick plate, front and back faces: 36” high diamond tread, .080” aluminum, applied over stainless 3’-0” high x full width of each door.

   b. Cooler door vision panel: 15 in. X 20 in., hermetically sealed, multi-pane unit including electrically conducting, transparent tin coating on interior face of ambient pane, connected to main door circuit.

H. Lighting fixtures and switches:

1. Quantity of lighting fixtures shall be as indicated on electrical lighting drawings or specified herein. Note the addition of one additional vapor-proof light to be added by each door of new units with low temperature ballast as required.

2. Fluorescent fixture (s), fully enclosed and gasketed for each room. To be **Handed to Electrical Contractor for Installation and Connection of Lights.**

3. Factory install and wire interior and exterior companion, provide three-way AC Pre-switch switches; mount in “FS” boxes adjacent to door latch.

4. Switch covers - gray Hypalon, weatherproof pre-switch plates.

5. Pilot lights - unbreakable red plastic lens, embedded in Hypalon plate.

   a. Interior red light - constant burning.

   b. Exterior red light – indicating

6. Rigid conduit and wiring: run within insulated wall panel. Terminate conduit in vapor tight splice box mounted on inside wall of compartment near ceiling.

7. Provide 1-1/4 in. diameter hole in ceiling panel through which electrical trade will make power connections.

8. Provide only conduit and wiring within wall panels, including boxes, light fixtures, switches and cover plates as a part of this section.

I. Temperature alarm system and indicating dial thermometer (combined):

1. By each door provide high set temperature alarm system for each cooler and freezer installed in their respective wall panels.

2. 2-1/2 inch digital thermometer (-30 degrees F. To +80 degree F), 115 volts power supply and a normally open dry contact adjustable thermostat which will close when the temperature exceeds a rise of 8 degrees above the set point.

3. Sensing unit element shall be of sufficient length to sense temperature in return air system.

4. Wiring of temperature alarm system and all other control wiring will be by electrical trade.

J. Evaporator drain lines:

1. Provide all rigid copper drain lines for the compartment evaporators. Run the drain lines pitched and concealed along the inside compartment walls and properly trap at the outside walls or between different temperature compartments. All drain lines subjected to compartment temperatures below 34 degrees F must be equipped with heat tapes to prevent freezing. All drain line minimum size 3/4 inches.

K. Finish trim:

1. Provide tolerance gaps between face of cold room walls and building walls finished with matching sheet metal angles, furnished and installed as part of this work except where joints are to be furnished with tile.

L. Enclosure panels:

1. Except where otherwise specified, K.E.C. to enclose space between suspended ceiling and top or refrigerator with matching sheet metal panels designed for easy removal to facilitate access to crawl space (dimensions permitting). Verify with Architectural Drawings.

M. Evaporator supports:

1. Provide and install 1/2 in. diameter Nylon, threaded rods, plated steel nuts and washers to accommodate support of evaporators.

N. Utility penetrations:

1. Provide penetrations at cold storage room wall and ceiling panels required to accommodate sprinkler head piping, electrical conduit and refrigeration lines, beverage and CO_2 lines. Seal all penetrations after piping, conduits and/or tubing have been installed.

O. Escutcheon plates:

1. Furnish sufficient quantity of 5 in. diameter stainless steel escutcheon blanks as required by each trade to dress off utility penetrations, including drain lines and sprinkler head piping lines.

2. Each trade shall be responsible for sealing of respective penetrations. K.E.C. shall be responsible that the above work for this item is done as specified.

P. Pressure relief ports:

1. Provide each freezer compartment with a pressure relief port as manufactured by Standard-Keil or approved equal. Series number 2786-1010-10000 voltage 120 A/C single phase.

2.08 REFRIGERATION SYSTEMS

A. System description:

1. Provide systems as specified by individual line items.

2. Provide complete with all compressors and condensers mounted on a common rack, pre-plumbed and prewired to common connection points as approved by architect/mechanical engineer.

B. General:

1. Provide all remote mechanical refrigeration items for other than self-contained equipment.

2. Provide all compressor units, condensers, refrigerant piping, cold room evaporators, control valves, and other components required for complete operating systems.

3. Furnish Cold room thermostats for installation by electrical trade.

4. Provide rigid copper drain lines for all evaporators. Drain lines to be properly fastened to interior walls using copper “C” straps. Drain line heaters are to be used where drain lines subjected to temperatures below 34° F can cause freezing. All drain lines must be properly pitched and

trapped between compartments having different temperatures and at the outside of the compartments. All drain line minimum size 3/4 inches.

5. All-self-contained refrigeration systems furnished under this Section shall include start-up and one year maintenance service, in addition to the required one-year warranty.

C. Related work specified in other sections:

1. Electrical services, wiring, final equipment connections and installation of temperature warning equipment.

2. Wall sleeves or plates for refrigerant line entries to cold storage room areas.

3. Furnishing and installation of switch and yellow lamp, to be installed in conjunction with warning bell and thermostat.

4. Disconnects.

D. Compressor and condensing units:

1. Provide single stage compressors with water or air as specified cooled condensers operating within the recommended range of suction and discharge pressures for economical operation and with required BTU rating per hour in accord with the Refrigeration Schedule.

2. Provide all units of the same manufacture and type, new standard catalogued, factory assembled, to operate with Freon R-22 (medium temperature) and R-502 (low temperature) refrigerant, and having capacities selected on a 16 hour running time for coolers and 20 hours for low temperature basic using 100 degrees F. ambient air and/or 105 F. degrees condensing temperature.

   a. Refrigerant R-404A for high and medium temperatures (coolers). Refrigerant R-502 for low temperature applications (freezers).

3. Rigidly mount-condensing unit motors, condenser receiver on a substantial drawn steel or cast base to effect quiet operation. Balance rotating parts for minimum vibration and lubricate with forced or splash oil system.

4. Motors: Standard manufacture, single speed not exceeding 1750 RPM, compound wound, ball bearing or sleeve bearing open type. Provide double squirrel-cage motors with high starting torque and low starting current in three phase applications.

   a. Provide with starters having overload protection through heater elements and/or fusible thermal units, for all motors.

5. Equip all machines with high-low pressure control switches having adjustable range and differential; quick acting type operated from the low-pressure side of the refrigeration system with a high pressure cut-out included in the mechanism to break motor circuit if

pressure becomes excessive.

a. Provide automatic reset type cut-out and crankcase heaters.

6. Water-cooled unit condensers: Sized to limit condensing temperatures to 105° F, using Freon.

7. Provide a liquid line drier and sight glass, flare type, at each condensing unit.

8. Condensing unit; Semi-hermetically sealed type employing the refrigerant cooled motor principle.

E. Installation:

1. Install compressor and condensing units as indicated on Drawings or as specified, and securely anchor.

2. Install units and refrigerant piping in a manner to eliminate noise and vibration from being transmitted to any part of the building.

   a. Equip machines with sound-absorbing isolation bases and with vibration eliminators in suction lines and discharge lines manufactured by American Vibration Eliminator Co., or an approved equal.

3. Provide individual pipe take-offs to and from each condensing unit with a water gate valve on both sides of the condensers. (If water-cooled).

F. Evaporators and cooling units

1. Type: direct expansion type of such size and design to effect required temperatures, humidity and to suit the application intended.

   a. Provide in accord with the Refrigeration Schedule.

2. Fabrication: Minimum 5/8 in. Copper tubing with copper or aluminum fins mechanically or hydraulically bonded to the tubes; bare tube evaporator fabricated or hard-drawn copper tubing, all return bends shall be PNOD-copper welded and tested to 250 psi air pressure, dehydrated, and sealed by the manufacturer.

3. Condenser receiver for water-cooled units: Provide as a standard part of the equipment by the machine manufacturer, counter flow, cleanable type. Equip the condenser receiver with fusible plug.

4. Provide water-cooled condensing units with an automatic water-regulating valve.

5. Wire motors 3/4 HP and larger for 208 volts, 60 cycle, three phase. Wire motors 1/2 HP and smaller for 120 volts, 60 cycle, single phase.

6. Support evaporators, specified for cold rooms by means of hangers, 1/2 in. diameter nylon threaded rods, plated steel nuts, and washers furnished by walk-in refrigerator manufacturer but installed by mechanical refrigeration installer.

7. Evaporators with fan or blower and motor for voltage shown and as a complete unit shall be UL approved. Motors wired to 120 volts, 60 Hz, single phase with built-in thermal overload protection.

G. Heat interchangers:

1. Provide all evaporators with heat interchangers as manufactured by and provided by equipment manufacturer, with a capacity to match the condensing units.

H. Oil separators:

1. Provide oil separators on all low-temperature operations or systems.

2. Where oil separators are used, connect the return line to the top of the crankcase above the oil level.

3. Provide all exposed oil return lines with shut-off valves of the pack less stem type.

I. Valves and accessories:

1. Valves: Standard weight and manufacture suitable for the service and purpose intended, and subject to Food Service Consultant (FSC)/architect's review.

2. Refrigerant shut-off valves (in the refrigerant piping): Equivalent to Henry, Seal Cap globe valves for line sizes 7/8 in. outside diameter and larger, and pack less diaphragm type for smaller sizes.

   a. Place valves at each inlet and each outlet of a condensing unit and in each liquid line and each suction branch to each evaporator or evaporators within a compartment.

3. Expansion valves: Sporlan Valve Co., or approved equal Provide and place in the refrigerant liquid line at the point where the line enters the evaporator, except when the valve is so furnished with the evaporator by others.

   a. Provide thermostatic expansion valves for each remote type evaporator.

   b. Provide all fabricated refrigerated compartments, coil plates, etc., with a 20 gauge stainless steel box to house expansion valves. Install in base of fixture or in a concealed position in cooperation with refrigeration systems installer.

4. Filter drier: Provided by refrigeration manufacturer and mounted in the liquid lines located in machine area.

   a. Filter driers as manufactured by Sporlan Valve Co or approved equal Systems with compressor horsepower up to and including 3 horsepower with Catch All type filter.

5. Solenoid valves: Sporlan Valve Co., or approved equal size to operate at a maximum of 2 lbs. Pressure drop across the valve for the capacity required.

   a. Provide full refrigerant line size solenoids, using silver solder connection where possible, for each walk-in box or field assembled equipment. Provide manual lift stem type.

   b. Sight glass: Sporlan Valve Co., or approved equal See-All moisture and liquid indicator.

7. Provide for each system a main liquid line shut-off valve, a sight glass, an evaporator liquid line shut-off valve, filter drier, a solenoid valve in walk-in compartments, an expansion valve, evaporator, heat exchanger, suction line shut-off valve and condensing unit with standard valving.

8. When provided by the refrigeration equipment manufacturer, expansion valves, solenoids, driers and sight glasses shall be the standard product of that manufacturer.

J. Temperature control:

1. Temperature control shall be by compartment thermostat for cold room compartments, and otherwise by pressure switch for each individual system.

   a. Provide a line voltage type thermostat to operate line voltage liquid line solenoid.

2. Control each cold room, above or below freezing, by an electric thermostat, Penn Type 219, or approved equal without external range adjustment.

K. Piping:

1. Refrigerant piping: Type ACR seamless copper tubing conforming to ASTM B280. All refrigerant piping shall be sized, installed, tested, and placed in operation in accordance with Chapter IV of the Standard Mechanical Code SBCC and the “American National Standard for Mechanical Refrigeration Equipment” ANSI B9.1-1971 or revised.

   a. For use under slabs on grade and above ceiling spaces (in conduit): Soft annealed copper.

   b. For use in exposed locations: Hard copper.

c. Cut tubing with tubing cutters, not with hack saw.

(1) After cutting, size tubing with a sizing tool. Expose refrigerant piping to view in accord with American Standard Safety Code for Mechanical Refrigeration.

2. Install tubing in a manner to avoid damage or deformation.

A. In areas where tubing is exposed to possible damage both during construction and during normal facility operations, piping shall be run in conduit provided by the mechanical trade in Division No. 15.

3. Size suction lines to give a maximum pressure drop from evaporator to machine of 2 lbs. for high temperature system, and of 1 lb. for freezer system, and allow gas velocities of not less than 750 RPM in horizontal runs and 1,500 RPM in vertical riser. Size liquid lines to give a maximum pressure drop of 3 lbs. from receiver to evaporator.

4. Slop tubing runs to prevent trapping of oil.

5. Tie suction and liquid lines for each condensing unit together at 24 inch intervals.

6. All liquid and suction lines are to be supported by a clamp support system as manufactured by Uni-strut Company, or approved equal. All pipe runs to be supported every 8 feet and pitched to prevent all trapping. No plumbers strap to be used.

a. All suction line from evaporator section must be properly “P” trapped.

L. Insulation:

1. Insulate refrigerant suction lines outside of refrigerated compartments, back to compressors with Armstrong Armaflex foamed plastic insulation, applied in accord with manufacturers instructions.

2. Provide adequate thickness of material to suit service and the ambient air temperatures to prevent condensation. Medium temperature coolers minimum wall thickness 1/2 inch. Low temperature freezers minimum wall thickness 3/4 inch. All butt joints must be properly sealed.

3. Refrigerant line connections: Insulate all refrigerant line connections where refrigerant lines may be exposed from the conduit lines to prevent condensation.

M. Pipe sleeves:

1. Provide sleeves for all piping passing through floors extending entirely through floors and 2 inches above finished floor, and of such diameter as to permit full thickness covering,

   a. Provide standard weight steel pipe for all sleeves through floors.

   b. Provide similar sleeves for all piping passing through walls, extend entirely through wall, and finish each end with a chromium plated wall flange fit neatly against the wall finish and securely fasten in place.

2. Caulk all refrigerant lines in pipe sleeves and make each end vermin-proof.

N. Silver brazing:

1. For copper to brass: Wildbery Bros. No. 14; Mueller No. 122: Easy flo No. 3, or approved equal

2. For copper to copper: Silfos 5%.

O. Leak test:

1. After all refrigerant connections are made, add refrigerant until the system pressure is at least 30 psi.

2. Then pressurize with nitrogen (CAUTION: Always use pressure reducing regulator) to 150 psi. Carefully leak test all factory and field made joints with electronic detector.

P. Evacuation:

1. Connect a rotary vacuum pump to the gauge port of the discharge service valve with copper tubing or vacuum hose, not less than 3/8 inch inside diameter.

   a. Open compressor suction and discharge service valves. Operate vacuum pump until a vacuum of 1500 microns absolute is obtained.

   b. Then break vacuum with refrigerant. Repeat evacuation and stop the pump at 1500 micron. Again break vacuum with refrigerant. Evacuate for a third time until a vacuum of 500 microns is reached. Break vacuum with refrigerant.

2. Do not start the compressor while the system is under vacuum.

A. Do not attempt to use the compressor as a vacuum pump. Use Cenco, Kinney or Stokes vacuum pump and Stokes, McLeod or General Electric Type M vacuum gate or approved equal.

B. Ordinary service gauges for evacuation are not acceptable.

Q. Charging (without winterstat):

1. After the third evacuation, charge the system with the correct (R22 or R502) refrigerant until the sight glass at receiver outlet is clear.

PART 3.00 - EXECUTION

3.01 INSPECTION

A. During installation, Food Service Consultant (FSC)/architect has the right to inspect equipment and equipment surfaces for conditions that will adversely affect operation, execution, finishes, code compliance, and quality of work. Correct adverse conditions before proceeding with other work.

B. At completion of installation and cleaning, Food Service Consultant (FSC), architect, Owner/User, and K.E.C. shall inspect equipment to ensure proper alignment, finish, fixing, and operation. Unsatisfactory conditions to be repaired prior to turnover.

3.02 INSTALLATION

A. K.E.C. shall install materials and equipment corresponding to his contractual obligations following detail and installation drawings established and transmitted by K.E.C. to Food Service Consultant (FSC) approved, and then approved by Architect, Owner/User, ED Connection.

B. All equipment that butts to a wall or against other equipment shall be sealed with Food Service Consultant (FSC) approved USDA silicone rubber sealant. Trim strips or other items requiring fasteners shall be set in a bed of silicone rubber sealant and fastened with suitable stainless steel fasteners 6 inches or less on centers. Prior to application of sealant, all surfaces shall be thoroughly cleaned and degreased.

C. K.E.C. shall oversee the proper installation of all electrical controls, switches, or other units which are separately furnished for field installation in or on equipment provided, unless otherwise specified.

D. Equipment to be installed perfectly plumb, aligned, and level.

E. Secure worktables at walls by means of full-length stainless steel Z-clips securely fastened to wall with suitable fasteners 24 inches or less on centers.

F. Equipment shall not be secured to works of other trades such as piping, ducts, cable trays, etc.

G. All cutting, fitting, or patching required during installation shall be accomplished by K.E.C., at his own expense, so as to make work conform to Plans and Specifications. K.E.C. shall not cut or otherwise alter, except with consent of Food Service Consultant (FSC), Architect, and work of any other Base Building contractor.

3.03 ADJUSTING AND CLEANING

A. At completion of installation, clean up, lubricate, and adjust where necessary all items of equipment provided, in first-class condition.

1. Where stainless steel surfaces are disturbed by installation or fabricating process, such surface shall be finished to match adjoining undisturbed surfaces.

2. At completion of installation work, all stainless steel shall be gone over with a portable polishing machine and buffed to match factory-controlled surfaces. All painted surfaces shall be carefully gone over and retouched as required to the approval of Food Service Consultant (FSC).

3.04 START-UP

A. During start-up of User/Owner's kitchen equipment, a technician designated by K.E.C. Representing each supplier and a competent representative of K.E.C. and his installer or designated representative shall be present for start-up and testing/adjusting, in order to prevent any failure during initial start-up and running of equipment.

B. Preliminary operations - tests:

1. All K.E.C. supplied gas fired equipment shall be checked by local gas company as to calibration, air adjustments, etc., and adjustments made as required. K.E.C. shall arrange and coordinate such visit and certify same to Food Service Consultant (FSC), General Contractor.

3.05 FINAL COMPLETION

A. Final "completion of installation" will be pronounced after approval and completion of installation and start-up by K.E.C. Certificate of final completion shall not be issued by Food Service Consultant (FSC) unless preliminary operations foreseen in "preliminary operations tests" have been satisfactory. If not, it shall be made once all necessary testing and adjustment operations have been performed by K.E.C. and accepted by Food Service Consultant (FSC), Architect, Owner/User, in accordance with all applicable codes governing work.

END OF SECTION

These specifications and all information herein are the property of ***RJS|BARBER Associates*** and may not be used or copied, either in whole or in part, without the expressed written consent of ***RJS|BARBER Associates***.

RJS | BARBER ASSOCIATES

RJS | Barber Associates

Integrated Food Service Design

9/6/2013

Crystal Lakes Elementary School

ITEM # 1 **MOP SINK**
Quantity: **One (1)**
Manufacturer: **Advance Tabco**
Model: **9-OP-28**

Furnish and set in place per manufacturer's standard specifications.

1. Model 9-OP-28 Mop Sink, floor mounted, 28" L-R, 20" F-B, 6" high water level, free flow drain with 2" IPS outlet, stainless steel construction

ITEM # 1A **HOSE REEL**
Quantity: **One (1)**
Manufacturer: **Fisher**
Model: **1801**

Furnish and set in place per manufacturer's standard specifications.

1. Model 1801 Reel Rinse Control Unit, valves, gauges and connections are completely enclosed within a stainless steel cabinet, dual check backflow preventer, water hammer silencer, 90° panel lock, padlock hasp & finger latch, 1/2" NPT female inlets & outlets

ITEM # 1B **SERVICE FAUCET**
Quantity: **One (1)**
Manufacturer: **Advance Tabco**
Model: **K-240**

Furnish and set in place per manufacturer's standard specifications.

1. Model K-240 Service Faucet

ITEM # 1C **SHELF**
Quantity: **One (1)**
Manufacturer: **Advance Tabco**
Model: **K-245**

Furnish and set in place per manufacturer's standard specifications.

1. Model K-245 Utility Shelf, 8" wide x 24" long

Crystal Lakes Elementary School

ITEM # 1D **HOSE REEL**
Quantity: **One (1)**
Manufacturer: **Fisher**
Model: **2980**

Furnish and set in place per manufacturer's standard specifications.

1. Model 2980 Hose Reel Assembly, exposed reel rinse with spray valve, reel is white powder coated finish, 35 feet of 3/8" ID, 3 ply, 2 braid hose, working pressure of 200 PSI, withstands 140° F water temperature, 1/2" NPT female

ITEM # 2 **GARBAGE CAN**
Quantity: **Three (3)**
Manufacturer: **Rubbermaid**
Model: **1792339**

Furnish and set in place per manufacturer's standard specifications.

1. Three (3) Model 1792339 Glutton® Recycling Station, two stream sortation, 46 gallon, hinged lid, includes item-specific top, symbol label pack, word label pack in English, Spanish, French, impact resistant plastic, blue

ITEM # 3 **LOCKER**
Quantity: **Three (3)**
Manufacturer: **Nexel**
Model: **CS186AS**

Furnish and set in place per manufacturer's standard specifications and the following:

1. Three (3) Model CS186AS Capital Locker, double tier, (2) doors, 12"Wx18"Dx72"H opening, 36"W O.A., 4-knuckle hinges w/welded door frame, recessed handle, pad lockable friction hasp, 2 sets of louvers, steel w/powder coat finish, 6" legs, assembled
2. Three (3) Tan
3. Three (3) Model FB12 Front Base, 12"W, to enclose base on lockers
4. Three (3) Model EB18 End Base, 18"W, to enclose base on lockers
5. Three (3) Model ST1218 Slope Top Kit, 12"W x 18"D, includes 3 tops, 2 sides & 3 backs

ITEM # 3A **ADA EMPLOYEE LOCKER**
Quantity: **One (1)**
Manufacturer: **Grainger**
Model: **6ZTE4**

Furnish and set in place per manufacturer's standard specifications.

1. Model 6ZTE4 Handicapped Accessible Locker Accessories:
   1. Where metal lockers are indicated with the international symbol of accessibility, comply with the following:

a. Provide not less than one shelf located no higher than 48 inches above the finished floor.
b. Provide one shelf located at the bottom of the locker no lower than 15 inches above the finished floor.
c. Where hooks, coat rods, or additional shelves are provided, locate no higher than 48 inches above the floor.
d. Apply a decal with the international symbol of accessibility to the face of the locker door.
e. Provide hardware that does not require tight grasping, pinching, or twisting of the wrist, and that operates with a force of not more than 5 lbf, as follows:
1) Provide a battery operated one-touch button lock.
2) Include a user button key that will unlock the deadbolt for 10 seconds before automatically relocking the vertical locking bar.
a) Include a time-set button key to allow for re-setting of time delay.
3) Include a time management button key that allows access to all locks in the system.
4) Include a programming button key for registering user and management button keys.
5) Subject to compliance with requirements, provide "Digilock T-Series" by Digilock, in model of suitable for locker type.

ITEM # 4 **HAND SINK**
Quantity: **One (1)**
Manufacturer: **Advance Tabco**
Model: **7-PS-41**

Furnish and set in place per manufacturer's standard specifications.

1. Model 7-PS-41 Physically Challenged Hand Sink, wall model, 14" long x 16" front-to-back x 6-1/4" deep, 18 gauge stainless steel construction, electronic faucet (battery & 110v options both supplied), deck mounted soap dispenser (pump), undermounted paper towel dispenser, basket drain, wall brackets, NSF and CSA listed

ITEM # 5 **CLEAN DISHTABLE**
Quantity: **One (1)**
Manufacturer: **Custom Fab**
Model: **CUSTOM**

Furnish and set in place per manufacturer's standard specifications.

1. Model CUSTOM Straight-Clean Dishtable, right-to-left, 10-1/2" backsplash, 3" rolled front & side rims, stainless steel legs, with stainless steel crossrails, 72" long, 14/304 stainless steel

ITEM # 5A **DISHTABLE SORTING SHELF**
Quantity: **One (1)**
Manufacturer: **Custom Fab**
Model: **CUSTOM**

Furnish and set in place per manufacturer's standard specifications.

1. Model CUSTOM Sorting Shelf, traditional solid design, 58" long with drain.

ITEM # 6 **DISHWASHER, DOOR TYPE**
Quantity: **One (1)**
Manufacturer: **Hobart**
Model: **AM15T-2**

Furnish and set in place per manufacturer's standard specifications and the following:

1. Model AM15T-2 Dishwasher, door type, Tall Chamber, hot water/chemical sanitizing, 58-65 racks/hour, straight-thru or corner, solid-state controls with digital status, with booster heater, electric tank heat, auto-fill, stainless steel tank, frame, doors & feet, sheet pan rack, ENERGY STAR®
2. Standard warranty - 1-Year parts, labor & travel time during normal working hours within the USA
3. Model DWT-AM15 Drain water tempering kit
4. On-site DWT installation (by local Hobart Service Office if within 50 mile radius and done during normal business hours), only with machine purchase (if purchased separately local installation rates will apply)
5. Model PRESREG-3/40BR 3/4" brass pressure regulator
6. Model SPEC-KIT Single point electrical connect AM15 kit (field installation required) (3 phase booster machines only)

ITEM # 6A **CONDENSATE HOOD**
Quantity: **One (1)**
Manufacturer: **Halton Co.**
Model: **CH**

Furnish and set in place per manufacturer's standard specifications.

1. Model CH Type II Hood 1 Hood Length (In): 48 Inches
   Hood Width (In): 48 Inches
   Hood Height (In): 24 Inches
   Hood Material: All 300 Stainless
   Mesh Filter Option for CH: Yes
   Switch Plate: Yes
   Ceiling Closure Height (In): 18
   Ceiling Closure Length (In): 144 (conduit by others) NO FAN

ITEM # 7 **SOILED DISHTABLE**
Quantity: **One (1)**
Manufacturer: **Custom Fab**
Model: **CUSTOM**

Furnish and set in place per manufacturer's standard specifications.

1. Model CUSTOM Straight-Soil Dishtable, right-to-left, 10-1/2" backsplash, with pre-rinse sink, stainless steel legs, with crossrails, 102" long, 14/304 stainless steel. Scrap Trough, welded to table to extend to trough collector.

Crystal Lakes Elementary School

ITEM # 7A **PRE-RINSE**
Quantity: **One (1)**
Manufacturer: **Fisher**
Model: **53473**

Furnish and set in place per manufacturer's standard specifications.

1. Model 53473 Pre-Rinse Unit, spring, 8" adjustable wall mount, Add-On-Faucet with 12" swing spout, stainless steel

ITEM # 7B **WASTE COLLECTOR**
Quantity: **One (1)**
Manufacturer: **Salvajor**
Model: **S419**

Furnish and set in place per manufacturer's standard specifications and the following:

1. Model S419 Trough Collector, trough conveyor & collecting system (widely accepted in areas where disposers are restricted), with trough diffuser, salvage basin & silverware trap, 3/4 HP corrosion-resistant pump, stainless steel construction, start/stop pushbutton control panel, with safety line disconnect & automatic shut off timer
2. 208v/60hz/3-ph
3. Model 992013 Scrap basket
4. Model 988001 Gusher head assembly for TVL, TVR & S419
5. Model 1219 Trough Collector rack guide

ITEM # 8 **THREE (3) COMPARTMENT SINK**
Quantity: **One (1)**
Manufacturer: **Custom Fab**
Model: **CUSTOM**

Furnish and set in place per manufacturer's standard specifications and the following:

1. Model CUSTOM Custom Sink, three compartment, w/left & right-hand drainboards, 24" front-to-back x 18" W compartment, 14" deep, with 11" high splash, s/s open frame base, boxed crossrails, 24" drainboards, s/s bullet feet, 14/304 stainless steel, overall 31" F/B x 109" L/R
2. Model CUSTOM Drain, lever operated with built in overflow, 2" NPT and 1-1/2" IPS outlet connections
3. Model CUSTOM Support Bracket, for lever drains on sinks

ITEM # 8A **PRE-RINSE**
Quantity: **One (1)**
Manufacturer: **Fisher**
Model: **54631**

Furnish and set in place per manufacturer's standard specifications.

1. Model 54631 Pre-Rinse Unit, spring, 8" adjustable wall mount, Add-On-Faucet with 14" swing spout, stainless steel

ITEM # 8B **FAUCET**
Quantity: **One (1)**
Manufacturer: **Fisher**
Model: **5414**

Furnish and set in place per manufacturer's standard specifications.

1. Model 5414 Faucet, splash-mounted, 8" centers, 14" swing spout, 3/4" inlets

ITEM # 9 **WALK IN FREEZER**
Quantity: **One (1)**
Manufacturer: **American Panel Corporation**
Model: **CUSTOM**

Furnish and set in place per manufacturer's standard specifications and the following:

1. Model CUSTOM WALK-IN FREEZER
   7'- 0.25" X 9'- 0" X 9'- 6" high -10° F Freezer
   Exposed Exterior: 20 gao stainless steel, #3 fmish
   Interior Walls: .040 USDA white smooth alum.
   Unexposed Exterior: 26 gao stucco acrylume
   Interior Ceiling: .040 USDA white smooth alum
   All panels are NSF 4" foamed-in-place urethane, UL classified with flame spread rating of20.
2. Model HINGED WALK-IN DOOR(S) 1 36" X 77" flush mount magnetic infitting door with cam-rise hinges, padlockable deadbolt handle (exterior doors only), door closer, brushed hardware, fully programmable WALK-IN MONITORING SYSTEM 100 featuring audio/visual temperature alarm with digital thermometer, high & low set points, 115V output, energy saving door frame heater wire, vapor proof light & switch with pilot light.
3. Heated Pressure Relief Vent, Model 1825 (3" diam.), 120 volt
4. 3/4" Plywood Underlayment in Floor Panel (not available with 2" floors)
5. High Security Mortise Cylinder Deadbolt Lock (Kason 10944-5)
6. System -I Mon. Sys. (repl. Sys. 100), SD Mem. Card Interface, HACCP Compliant & Batt. Back-Up
7. Panic Alarm for use with System 200 Walk-In Monitoring System (quoted separately)
8. Relay to Enable Dry Contacts Connection on System 100 (pre-wired)
9. PC Commun. (2-way) for System 200 Walk-In Monitoring System (quoted separately)
10. Light Switch, CAL-OSHA, special 3-way per door with System 100 or 200 Controller
11. CCI Clear Vu 2-pc Swing Door Curtain, 34" (or 36") x 80" opening
12. (3) Spring-Loaded Hinges per Door
13. Vision Window, 14" x 14" heated
14. Two (2) Door Kickplate, 14 gao SIS, 36" High, <37" Door
15. Door bumper bar, 114" x 3" alum. (APC), int. only, requires int. KP (not incl.)
16. Foot Treadle
17. Two (2) Trim Strips, 3" x 3", 20 gao Stainless Steel

18. Thirty-Four (34) Closure Panel to 1 0' ceiling, 20 gao Stainless Steel
19. Fluorescent Light Fixture, Freezer 48" double bulb (-20°F operating temp.)
20. Fourteen (14) Bumper Rail, 4" x 18 gao SIS with wood insert & Hidden Top Mounting
21. Motion sensor wi light activator & shut off, coolers & freezers (Kason 1901) up to 20' ceiling ht.
22. 1/8" Stainless Steel Threshold Plate (36" wide doors and below)
23. Custom Length and Width Upcharge

ITEM # 9A **FREEZER EVAPORATOR COIL <Included>**
Quantity: **One (1)**
Manufacturer: **American Panel Corporation**
Model: **CTE36-69**

Furnish and set in place per manufacturer's standard specifications.

1. Model CTE36-69 FREEZER Evaporator Coil - Refer to FS-W Drawing for all mechanical information and connection points

ITEM # 9B **FREEZER CONDENSOR**
Quantity: **One (1)**
Manufacturer: **American Panel Corporation**
Model: **A V A25IOZXTXC**

Furnish and set in place per manufacturer's standard specifications and the following:

1. Model A V A25IOZXTXC FREEZER: -10/2.50 HP hermetic Air Cooled refrigeration system, 208/Both include center mount evapator coil, 5-year compressor warranty.

   BY K.E.C. INSTALL PANEL & REFRIGERATION SYSTEMS AND ALLOW FOR DISTANCE AND LENGTH OF RUNS IN PROPERLY SIZING REFRIGERATION COMPONENTS.

   Refer to FS-W Drawing for all mechanical information and connection points
2. Galv Weather Cover
3. Steel Compressor Mounting Stand
4. LASA Winterization Controls, Package

ITEM #10-12 **Spare No.**

ITEM # 13 **PLASTIC SHELVING UNIT**
Quantity: **Six (6)**
Manufacturer: **Metro**
Model: **5X357GX3**

Furnish and set in place per manufacturer's standard specifications.

1. Six (6) Model 5X357GX3 MetroMax i™ Starter Shelving Unit, (5) open grid polymer shelves with Microban® antimicrobial protection, (4) posts, 74" H, 18" W, 48" L, includes (2) "S" hooks per shelf, built

in Microban® antimicrobial protection, KD

ITEM # 14 **PLASTIC SHELVING UNIT**
Quantity: **Three (3)**
Manufacturer: **Metro**
Model: **5X337GX3**

Furnish and set in place per manufacturer's standard specifications.

1. Three (3) Model 5X337GX3 MetroMax i™ Starter Shelving Unit, (5) open grid polymer shelves with Microban® antimicrobial protection, (4) posts, 74" H, 18" W, 36" L, includes (2) "S" hooks per shelf, built in Microban® antimicrobial protection, KD

ITEM # 15 **EYE WASH SHOWER STATION**
Quantity: **One (1)**
Manufacturer: **Bradley Corp.**
Model: **S19-310JJ**

Furnish and set in place per manufacturer's standard specifications and the following:

1. Model S19-310JJ Eye wash & drench shower station
2. Model S19-2100 Navigator EFX25 - Emergency Thermostatic Mixing Valve

ITEM # 15A **FLOOR TROUGH**
Quantity: **One (1)**
Manufacturer: **IMC/Teddy**
Model: **FT-1224-SG**

Furnish and set in place per manufacturer's standard specifications.

1. Model FT-1224-SG FT Floor Trough, 12" wide x 24" long x 4" deep, with drain & (SG) subway grating

ITEM # 16 **AIR CURTAIN**
Quantity: **One (1)**
Manufacturer: **Mars Air Systems**
Model: **PH1048-1EBB-PW**

Furnish and set in place per manufacturer's standard specifications and the following:

1. Model PH1048-1EBB-PW Phantom 10 Series Air Door, for 48 wide door, Electric Heated, (1) 1/2 HP motor, 208vv/60/1-ph, cETLus, Pearl White powder coated cabinet
2. 18 month warranty, standard
3. Pearl white, standard finish; contact factory for other colors
4. Model J0034 Level 2 control package, line voltage control, door limit switch, adjustable time delay, (1 sec-17 min)

5. Model HL2SPD Two Speed motor, with Hi/Lo switch located on control panel

ITEM # 17 **ADA WORK TABLE, 120" LONG**
Quantity: **One (1)**
Manufacturer: **Custom**
Model: **CUSTOM**

Furnish and set in place per manufacturer's standard specifications and the following:

1. Model CUSTOM Work Table, 36" wide top with splash at rear only, 96" long, with s/s legs, side & rear s/s crossrails, 14 gauge, type 304 stainless steel top, no backsplash, s/s bullet feet to meet ADA Standards
2. Model CUSTOM Sink Welded Into Table Top, 14" X 16" X(6-1/2" max depth) - Provide off-set drain to meet ADA Standards. Refer to elevation drawings for details
3. Zurn Industries Model Z6915 AquaSense® Electronic Faucet, deck mount, 4" centerset, 7-1/8" centerline spout w/sensor module, 30 second time out, in-line filter, 1.5 gallons per minute vandal-resistant aerator, battery operated

ITEM # 17A **OVERSHELF-POT RACK W/SHELF**
Quantity: **One (1)**
Manufacturer: **Custom Fab**
Model: **CUSTOM**

Furnish and set in place per manufacturer's standard specifications.

1. Model CUSTOM Shelf, table mounted, single deck, 12" wide, 96" long, stainless steel, uprights of shelf, mid-mounte Pot Rack, and Utensil Rack , circular design, 96" long, with 18 plated pot hooksd along with shelf to expand over table.

ITEM # 18 **PROOFER HOLDING CABINET**
Quantity: **One (1)**
Manufacturer: **Winston Industries**
Model: **HA4022**

Furnish and set in place per manufacturer's standard specifications and the following:

1. Model HA4022 CVap® Holding Cabinet, full size, 22 cu. ft., electric differential control, 14 adjustable universal wire rack supports, field reversible door hinges, magnetic door handle, fanless, water fill operated manually, full-perimeter insulated, load limit 65 lbs (29.25 kg) per rack, includes: (2) locking & non-locking heavy duty non-marking casters, stainless steel construction, supplied with 84" power cord and plug, UL, cUL, UL Sanitation, NSF, ENERGY STAR®
2. One year limited warranty is standard (excluding gaskets, lamps, hoses, power cords, glass panels & evaporators) - See ZAP warranty agreement for full disclosure
3. Right-hand
4. Window in both upper & lower front doors
5. H3 3" swivel casters (2) with brakes

Crystal Lakes Elementary School

ITEM # 19 **CONVECTION OVEN**
Quantity: **One (1)**
Manufacturer: **Blodgett Oven**
Model: **DFG100 SINGLE**

Furnish and set in place per manufacturer's standard specifications and the following:

1. Model DFG100 SINGLE Convection Oven, gas, single-deck, standard depth, solid state manual control with digital timer, 2-speed fan, (5) racks & (11) positions, interior light, simultaneous operated doors with glass, stainless steel front, sides & top, 25" stainless steel legs, 55,000 BTU, cETL, NSF, CE, ENERGY STAR®
2. (2) year parts, (1) year labor warranty and (3) additional year door warranty (parts only), standard
3. Gas type to be determined
4. Standard Controls: Solid-State manual controls with digital timer
5. Draft diverter or Draft hood must be selected below
6. 6" stainless steel legs (set), replacement/extra
7. The new unit is to be placed on top of an existing unit that is already on site.

ITEM # 19 **CONVECTION OVEN <Existing>**
Quantity: **One (1)**
Manufacturer: **Blodgett Oven**
Model: **DFG100 SINGLE**

Furnish and set in place per manufacturer's standard specifications.

1. Model DFG100 SINGLE Convection Oven, gas, single-deck, standard depth, - EXISTING CONVECTION OVEN TO BE RELOCATED TO NEW LOCATION AND USED AS THE BOTTOM SECTION FOR THE ADDITIONAL ITEM#19 OVEN BEING PURCHASED TO MAKE ONE DOUBLE STACKED CONVECTION ON CASTERS

ITEM # 19A **SAFETY SYSTEM MOVEABLE GAS CONNECTOR**
Quantity: **Two (2)**
Manufacturer: **Dormont Manufacturing**
Model: **1675KIT2S48PS**

Furnish and set in place per manufacturer's standard specifications.

1. Two (2) Model 1675KIT2S48PS Safety System Moveable Gas Connector Kit, 3/4" inside dia., 48" long, covered with stainless steel braid, coated with blue antimicrobial PVC, 1 SnapFast™ QD, 2 SwivelMAX™, 1 full port valve, 1 pair Safety-Set™ with adhesive foam tape and hardware mounting options, coiled restraining cable with hardware, limited lifetime warranty

ITEM #20-22 **Spare No.**

Crystal Lakes Elementary School

ITEM # 23 **BOILERLESS STEAMER**
Quantity: **One (1)**
Manufacturer: **Groen**
Model: **(2)SSB-5GF**

Furnish and set in place per manufacturer's standard specifications and the following:

1. Model (2)SSB-5GF SmartSteam™ 100 Convection Steamer, gas, double-stacked, open leg stand bullet feet, (5) 12 x 20 x 2-1/2" pans capacity per compartment, boilerless, door, stainless steel interior & exterior, single water connection, 62,000 BTU each
2. (2) year parts & labor, (5) year cavity warranty, standard
3. Model 149100 SmartSteam™ water treatment kit
4. Gas type to be specified
5. Model ELEV0-2000 For elevation between 0 and 2000 (When order is placed, all equipment with elevation specified will be assigned a different Part# by the factory)
6. Door hinged on left, std.
7. Model 098611 Casters, set of (4), (2) locking, for stands

ITEM # 23A **SAFETY SYSTEM MOVEABLE GAS CONNECTOR**
Quantity: **One (1)**
Manufacturer: **Dormont Manufacturing**
Model: **1650KIT2S36PS**

Furnish and set in place per manufacturer's standard specifications.

1. Model 1650KIT2S36PS Safety System Moveable Gas Connector Kit, 1/2" inside dia., 36" long, covered with stainless steel braid, coated with blue antimicrobial PVC, 1 SnapFast™ QD, 2 SwivelMAX™, 1 full port valve, 1 pair Safety-Set™ with adhesive foam tape and hardware mounting options, coiled restraining cable with hardware, limited lifetime warranty

ITEM # 24A **GREASE HOOD**
Quantity: **One (1)**
Manufacturer: **Halton Co.**
Model: **KVE**

Furnish and set in place per manufacturer's standard specifications.

1. Model KVE Q KVE SJ H-Capture-Jet Hood Hood Qty: 1
   Hood Qty: 1
   Hood Length (In): 99 Inches
   Hood Width (In): 56 Inches
   Hood Height (In): 24 Inches
   Style of Hood: Wall Unit
   Hood Material: All 300 Stainless
   Light Options: LED
   Manual Balancing Damper: Yes

Ansul Pre-Pipe: R-102 Pre-Pipe
Switch Panel Qtys: 1
Timer Panel: Yes
Ceiling Closure Height (In): 18
Ceiling Closure Length (In): 265
Supply Plenum: Yes
Accuflow: Yes
Hood Qty: 1
Hood Length (In): 99 Inches
Hood Width (In): 66 Inches
Hood Height (In): 24 Inches
Style of Hood: Wall Unit
Hood Material: All 300 Stainless
Light Options: LED
Manual Balancing Damper: Yes
Ansul Pre-Pipe: R-102 Pre-Pipe
T-Stat: Yes
Ceiling Closure Height (In): 18
Ceiling Closure Length (In): 285
Supply Plenum: Yes
Accuflow: Yes
Standard Feature Description Capture-Jet
Listed UL Exhaust Hood; Capture-Jet Fan Technology
T.A.B. (Test Air Balance) Ports; KSA S/S Filters
93-98% Efficient on Particulate in the 5-10
Micron Range Based on ASTM-F2519-05; Exhaust
Volume Based on ASTM-f1704-05 and F2474-05;
KSA Filter Removal Tool
If the hoods have to be broken into smaller
sections to accommodate job site conditions
there will be additioal charges added per
section of hood

ITEM # 24A.1 **CAPTURE JET FAN**
Quantity: **One (1)**
Manufacturer: **Halton Co.**
Model: **CJF**

Furnish and set in place per manufacturer's standard specifications.

1. Model CJF Capture Jet Fan

ITEM # 24B **GREASE HOOD**
Quantity: **One (1)**
Manufacturer: **Halton Co.**
Model: **KVE**

Furnish and set in place per manufacturer's standard specifications.

1. Model KVE Q KVE SJ H-1B Capture-Jet Hood Hood Qty: 1
   Hood Qty: 1
   Hood Length (In): 99 Inches
   Hood Width (In): 56 Inches
   Hood Height (In): 24 Inches
   Style of Hood: Wall Unit
   Hood Material: All 300 Stainless
   Light Options: LED
   Manual Balancing Damper: Yes
   Ansul Pre-Pipe: R-102 Pre-Pipe
   Switch Panel Qtys: 1
   Timer Panel: Yes
   Ceiling Closure Height (In): 18
   Ceiling Closure Length (In): 265
   Supply Plenum: Yes
   Accuflow: Yes
   Hood Qty: 1
   Hood Length (In): 99 Inches
   Hood Width (In): 66 Inches
   Hood Height (In): 24 Inches
   Style of Hood: Wall Unit
   Hood Material: All 300 Stainless
   Light Options: LED
   Manual Balancing Damper: Yes
   Ansul Pre-Pipe: R-102 Pre-Pipe
   T-Stat: Yes
   Ceiling Closure Height (In): 18
   Ceiling Closure Length (In): 285
   Supply Plenum: Yes
   Accuflow: Yes
   Standard Feature Description Capture-Jet
   Listed UL Exhaust Hood; Capture-Jet Fan Technology
   T.A.B. (Test Air Balance) Ports; KSA S/S Filters
   93-98% Efficient on Particulate in the 5-10
   Micron Range Based on ASTM-F2519-05; Exhaust
   Volume Based on ASTM-f1704-05 and F2474-05;
   KSA Filter Removal Tool
   If the hoods have to be broken into smaller
   sections to accommodate job site conditions
   there will be additioal charges added per
   section of hood

ITEM # 24B.1 **CAPTURE JET FAN**
Quantity: **One (1)**
Manufacturer: **Halton Co.**

Model: **CJF**

Furnish and set in place per manufacturer's standard specifications.

1. Model CJF Capture Jet Fan

ITEM # 24C **EXHAUST FAN By G/C**
Quantity: **One (1)**
Manufacturer: **By General Contractor**
Model: **EF**

Furnish and set in place per manufacturer's standard specifications.

1. Model EF Exhaust Fan - Provided thru the HVAC Contract

ITEM # 24D **SUPPLY AIR FAN By G/C**
Quantity: **One (1)**
Manufacturer: **By General Contractor**
Model: **SUPPLY AIR FAN**

Furnish and set in place per manufacturer's standard specifications.

1. Model SUPPLY AIR FAN Supply Air Fan, By Other Vendor, NIC within this scope of work, by GCr.

ITEM # 24E **FIRE SUPPRESSION SYSTEM**
Quantity: **One (1)**
Manufacturer: **Halton Co.**
Model: **ANSUL/R-102**

Furnish and set in place per manufacturer's standard specifications.

1. Model ANSUL/R-102 Ansul R-102 Fire System 1
   Hood Length (In): 198 Inches
   Ansul System Size: 6 Gallon System
   Dwg, Permits & Air Test Only $:
   Union Labor/Prev Wage $:
   Fire Cabinet: Yes
   Gas Valves: 2" Mechanical
   Remote Tank Installation: 2
   Ansul R-102 Description
   Pre-Engineered Wet Chemical System per UL300
   Tank System Enclosed in Stainless Steel Box
   Pre-Piped in Factory to include Exhaust Duct
   Protection, Plenum Protection, Overhead Appliance
   Protection w/ SS Drops, Remote Pull Station and
   Microswitches .
   Final Field Installation by Certified Technician.
   "Electrical contactor/ shunt trip breaker by EC.""

ITEM # 24F **ST/ST WALL FLASHING**
Quantity: **One (1)**
Manufacturer: ***Custom Stainless Misc**
Model: **ST/ST WALL**

Furnish and set in place per manufacturer's standard specifications.

1. Model ST/ST WALL (1) Lot S/S Wall Panels For Cooking Line

   to cover entire cooking wall under hood. 18 gauge S/S with T-strips, J-Strips and edge caps.

ITEM # 25 **FLOOR TROUGH**
Quantity: **One (1)**
Manufacturer: **IMC/Teddy**
Model: **CFT-2424-SGAS**

Furnish and set in place per manufacturer's standard specifications.

1. Model CFT-2424-SGAS CFT Floor Trough, 24" wide x 24" long x 4" deep, with drain & (SGAS) anti-slip subway grating

ITEM # 25A **TILTING SKILLET, GAS**
Quantity: **One (1)**
Manufacturer: **Cleveland Range**
Model: **SGL30T1**

Furnish and set in place per manufacturer's standard specifications and the following:

1. Model SGL30T1 PowerPan™ Tilting Skillet, Gas, 30-gallon capacity, bead blasted cooking surface, 10º tilt cooking feature, with easy manual hand tilt, spring-assisted cover with vent, gallon & liter markings, food strainer, stainless steel construction with open leg frame, CE, NSF
2. One year limited warranty, standard
3. Gas type to be specified
4. Model TD2SK 2" tangent draw-off valve, front mounted left side, includes FSSK strainer
5. Model TDDC Drain Cup Assembly, includes: 8' length of 2" ID hose , stainless steel cup assembly & hose clamp
6. Model DPS13 Double Pantry Faucet with 3/4" swing spout & bracket

ITEM # 25B **SAFETY SYSTEM MOVEABLE GAS CONNECTOR**
Quantity: **One (1)**
Manufacturer: **Dormont Manufacturing**
Model: **1675KIT2S48**

Furnish and set in place per manufacturer's standard specifications.

1. Model 1675KIT2S48 Safety System Moveable Gas Connector Kit, 3/4" inside dia., 48" long, covered with stainless steel braid, coated with blue antimicrobial PVC, 1 SnapFast™ QD, 2 SwivelMAX™, 1 full port valve, coiled restraining cable with hardware, limited lifetime warranty

ITEM # 26 **RANGE, 36", 6 OPEN BURNERS**
Quantity: **One (1)**
Manufacturer: **Southbend**
Model: **4362D**

Furnish and set in place per manufacturer's standard specifications and the following:

1. Model 4362D Ultimate Restaurant Range, Gas, 36", 6 Non-Clog burners with wavy grates, standard oven base, standing pilot, 22-1/2" flue riser with heavy duty shelf, stainless steel front, sides and shelf, 6" adjustable legs, 207,000 BTU, CSA, NSF
2. Standard one year limited warranty (range)
3. NOTE: 22.5" high flue riser, with heavy duty shelf, standard
4. Battery spark ignition (for open top burners, charbroilers, hot tops and griddles)
5. Casters, 2 locking & 2 standard, in lieu of legs
6. Extra oven rack

ITEM # 26A **SAFETY SYSTEM MOVEABLE GAS CONNECTOR**
Quantity: **One (1)**
Manufacturer: **Dormont Manufacturing**
Model: **1675KIT2S48PS**

Furnish and set in place per manufacturer's standard specifications.

1. Model 1675KIT2S48PS Safety System Moveable Gas Connector Kit, 3/4" inside dia., 48" long, covered with stainless steel braid, coated with blue antimicrobial PVC, 1 SnapFast™ QD, 2 SwivelMAX™, 1 full port valve, 1 pair Safety-Set™ with adhesive foam tape and hardware mounting options, coiled restraining cable with hardware, limited lifetime warranty

ITEM # 27 **WORK TABLE**
Quantity: **One (1)**
Manufacturer: **Custom Fab**
Model: **CUSTOM**

Furnish and set in place per manufacturer's standard specifications and the following:

1. Model CUSTOM Work Table, 30" wide top, with splash at rear only, enclosed base 96" long, with adjustable undershelf, s/s frame & shelf, 14 gauge, type 304 stainless steel top, 10" backsplash, with countertop non drip edge, 16 gauge type 304 s/s legs with s/s bullet feet
2. Two (2) Model CUSTOM Prep Sink Welded Into Table Top, 20" X 20" X 12"
3. Two (2) Model CUSTOM Drain, lever operated with built in overflow, 2" NPT and 1-1/2" IPS outlet connections
4. Model CUSTOM Hand Sink Welded Into Table Top, 10" X 14" X 8"
5. Model CUSTOM 5" tall NSF partition
6. Model CUSTOM Enclosed Cabinet Base with door by hand sink section only.

ITEM # 27A **OVERSHELF**
Quantity: **One (1)**
Manufacturer: **Custom Fab**
Model: **CUSTOM**

Furnish and set in place per manufacturer's standard specifications.

1. Model CUSTOM Shelf, wall-mounted, stainless steel, 12" wide, 8 feet long

ITEM # 27B **FAUCET**
Quantity: **One (1)**
Manufacturer: **Fisher**
Model: **60704**

Furnish and set in place per manufacturer's standard specifications.

1. Model 60704 Faucet, 8" backsplash mount, with 14" swing spout, wrist handles, stainless steel

ITEM # 27C **PAPER TOWEL <By Vendor>**
Quantity: **One (1)**
Manufacturer: **Georgia-Pacific**
Model: **EMOTION**

Furnish and set in place per manufacturer's standard specifications.

1. Model EMOTION Emotion Wall Mount Automated Touchless Towel Dispensers. Item provided by Vendor/Owner Supplied

ITEM # 27D **ELECTRONIC FAUCET**
Quantity: **One (1)**
Manufacturer: **T&S Brass**
Model: **EC-3100-120X**

Furnish and set in place per manufacturer's standard specifications.

1. Model EC-3100-120X ChekPoint Electronic Faucet, 120X rigid GN, vandal resistant aerator

ITEM # 27E **SOAP DISPENSER <By Vendor>**
Quantity: **One (1)**
Manufacturer: **By Vendor**
Model: **BY VENDOR**

Furnish and set in place per manufacturer's standard specifications.

1. Model BY VENDOR SOAP DISPENSER

Crystal Lakes Elementary School

ITEM # 27F **WASTE BASKET**
Quantity: **One (1)**
Manufacturer: **Rubbermaid**
Model: **FG254300BLA**

Furnish and set in place per manufacturer's standard specifications.

1. Model FG254300BLA Waste Basket, 28 qt., 14-1/2"L x 10-1/2"W x 15-5/16"H, fire resistant, rounded corners, textured finish, fiberglass, CSFM & UL approved, black

ITEM # 28 **WALK IN COOLER**
Quantity: **One (1)**
Manufacturer: **American Panel Corporation**
Model: **CUSTOM**

Furnish and set in place per manufacturer's standard specifications and the following:

1. Model CUSTOM WALK-IN COOLER
   13'- 1" X 7'- 2" X 9'- 6" high 35° F Cooler
   Foamed-in-Place 4" Urethane floor panels 14 Gauge Galvanized Steel (not NSF approved)
   Exposed Exterior: 20 gao stainless steel, #3 fmish
   Interior Walls: .040 USDA white smooth alum.
   Unexposed Exterior: 26 gao stucco acrylume
   Interior Ceiling: .040 USDA white smooth alum.
   All panels are NSF 4" foamed-in-place urethane, UL classified with flame spread rating of20.
2. Model HINGED WALK-IN DOOR(S) 1 36" X 77" flush mount magnetic infitting door with cam-rise hinges, padlockable deadbolt handle (exterior doors only), door
   closer, brushed hardware, fully programmable WALK-IN MONITORING SYSTEM 100 featuring audio/visual temperature
   alarm with digital thermometer, high & low set points, 115V output, energy saving door frame heater wire, vapor
   proof light & switch with pilot light.
3. 3/4" Plywood Underlayment in Floor Panel (not available with 2" floors)
4. High Security Mortise Cylinder Deadbolt Lock (Kason 10944-5)
5. System -I Mon. Sys. (repl. Sys. 100), SD Mem. Card Interface, HACCP Compliant & Batt. Back-Up
6. Panic Alarm for use with System 200 Walk-In Monitoring System (quoted separately)
7. Relay to Enable Dry Contacts Connection on System 100 (pre-wired)
8. PC Commun. (2-way) for System 200 Walk-In Monitoring System (quoted separately)
9. Light Switch, CAL-OSHA, special 3-way per door with System 100 or 200 Controller
10. CCI Clear Vu 2-pc Swing Door Curtain, 34" (or 36") x 80" opening
11. (3) Spring-Loaded Hinges per Door
12. Vision Window, 14" x 14" heated
13. Two (2) Door Kickplate, 14 gao SIS, 36" High, <37" Door
14. Door bumper bar, 114" x 3" alum. (APe), int. only, requires int. KP (not incl.)
15. Foot Treadle
16. Two (2) Trim Strips, 3" x 3", 20 gao Stainless Steel
17. Forty-Three (43) Closure Panel to lO' ceiling, 20 gao Stainless Steel

18. Two (2) Fluorescent Light Fixture, Cooler 48" double bulb (35°F operating temp.)
19. Nineteen (19) Bumper Rail, 4" x 18 gao SIS with wood insert & Hidden Top Mounting
20. Motion sensor wi light activator & shut off, coolers & freezers (Kason 1901) up to 20' ceiling ht.
21. 1/8" Stainless Steel Threshold Plate (36" wide doors and below)
22. Custom Length and Width Upcharge

ITEM # 28A **COOLER EVAPORATOR COIL <Included>**
Quantity: **One (1)**
Manufacturer: **American Panel Corporation**
Model: **CTA38-88**

Furnish and set in place per manufacturer's standard specifications.

1. Model CTA38-88 Cooler Evaporator Coil - Refer to FS-W Drawing for all mechanical information and connection points

ITEM # 28B **COOLER CONDENSOR**
Quantity: **One (1)**
Manufacturer: **American Panel Corporation**
Model: **FJAF-0106-CAV-020**

Furnish and set in place per manufacturer's standard specifications and the following:

1. Model FJAF-0106-CAV-020 COOLER: 35*/1.00 HP med temp, hermetic PAR refrigeration system, 208/Both include center mount evapator coil, 5-year compressor warranty.

   BY K.E.C. INSTALL PANEL & REFRIGERATION SYSTEMS AND ALLOW FOR DISTANCE AND LENGTH OF RUNS IN PROPERLY SIZING REFRIGERATION COMPONENTS.

   Refer to FS-W Drawing for all mechanical information and connection points
2. Galv Weather Cover
3. Steel Compressor Mounting Stand
4. LASA Winterization Controls, Package

ITEM # 29 **PLASTIC SHELVING UNIT**
Quantity: **Five (5)**
Manufacturer: **Metro**
Model: **5X367GX3**

Furnish and set in place per manufacturer's standard specifications.

1. Five (5) Model 5X367GX3 MetroMax i™ Starter Shelving Unit, (5) open grid polymer shelves with Microban® antimicrobial protection, (4) posts, 74" H, 18" W, 60" L, includes (2) "S" hooks per shelf, built in Microban® antimicrobial protection, KD

ITEM #30-32 **Spare No.**

ITEM # 33 **PLASTIC WITH METAL FRAME SHELVING**
Quantity: **Four (4)**
Manufacturer: **Metro**
Model: **MX1854G**

Furnish and set in place per manufacturer's standard specifications and the following:

1. Four (4) Model MX1854G MetroMax i™ Shelf, 18" W, 54" L, complete with frame, open-grid mat & (4) wedge connectors, built in Microban® antimicrobial product protection
2. Four (4) Model MX74P MetroMax i™ Post, 74" H, for stationary use or with a dolly, adjustable leveling bolts, adjusts at 1" increments, corrosion proof all polymer construction with built in Microban® antimicrobial product protection

ITEM # 34A **SNEEZE GUARD <Included>**
Quantity: **One (1)**
Manufacturer: **Custom**
Model: **CUSTOM**

Furnish and set in place per manufacturer's standard specifications.

1. Model CUSTOM SNEEZE GUARD

ITEM # 34B **DROP-IN FROST TOP**
Quantity: **One (1)**
Manufacturer: **Atlas Metal**
Model: **WF-4**

WF-3

Furnish and set in place per manufacturer's standard specifications and the following:

1. Model WF-4 Frost Top Drop-In Unit, refrigerated unit, self-contained refrigeration system, 19-1/2" x 52-3/4" x 1" stainless steel frost top, galvanized steel outer liner, with on/off switch and pilot light, 1"IPS drain, 1/3 HP
2. NOTE: A 1" IPS drain & valve is provided

ITEM # 34C **COLD SERVING COUNTER**
Quantity: **One (1)**
Manufacturer: **Multiteria**
Model: **CLS96 COLD**

Furnish and set in place per manufacturer's standard specifications.

1. Model CLS96 COLD Multiteria CLS96-MOD114 Cold Food Counter

   Counter body to be as specified for item 34.1.

Top to be 114” long x 34" wide and as specified for item 34.1.

(Item 34B) Atlas WF-4 drop-in frost top, self-contained refrigeration, 19-1/2” x 52-3/4” x 1”, 14 gauge 304 stainless steel frost top, galvanized steel outer liner, vinyl gasket under beaded edge, with remote on/off switch flush mounted in counter apron, and pilot light, ½” drain, 6’ long cord and plug. Furnished and installed into counter by Multiteria.

Provide stainless steel hinged louvered doors on operator side at compressor housing to allow for ease of service.

(Item 34C) Two-tier display shelf, in (2) sections. (1) section to span frost top, and other section to cover remaining length of counter. Each tier and section to have 3/8” clear tempered glass shelf and 6” adjustable 1/4” clear tempered front glass. The first tier to be 14” above countertop, and the second tier to be 12” above first. LED lighting to be under each tier in each section, and a glass end panel to be at each end. Unit fabricated from 1” x 2” front supports. All posts, brackets and hardware to be black powder coated. Power switch for lighting mounted in counter apron.

Signage overstructure to be as specified for item 34.1.

Counter to have NEMA 5-15R receptacle mounted in counter base with 8’ cord and plug.

Operator side of counter to be open storage as specified for item 34.1.

Flat stainless steel work shelf to be as specified for item 34.1.

Tray slide to be as specified for item 34.1.

Counter to have laminate panels as specified for item 34.1 with louvers as required.

Provide with Tightlink interlocking mechanism between counter units.

Black powder coated toe base mounted on 16 gauge stainless steel “Z” bracket at front of counter and ends where required.

ITEM # 34C	**SNEEZE GUARD**
Quantity:	**One (1)**
Manufacturer:	**Custom**
Model:	**CUSTOM**

Furnish and set in place per manufacturer's standard specifications.

1. Model CUSTOM SNEEZE GUARD

ITEM # 34D **DROP-IN HOT WELL**
Quantity: **One (1)**
Manufacturer: **Wells**
Model: **MOD-400TDM/AF**

Furnish and set in place per manufacturer's standard specifications and the following:

1. Model MOD-400TDM/AF Food Warmer, top-mount, built-in, electric, auto-fill, (4) 12" x 20" openings with manifolded drains with one valve, wet/dry operation, double control panel, thermostatic control, stainless steel interior, insulated aluminum steel housing, 1240with NSF, UL, CSA
2. Limited 2 year parts & 1 year labor warranty, standard
3. Model 21923 208/4.96/14.5/direct (field convertible to single phase)

ITEM # 34H **HOT SERVING COUNTER**
Quantity: **One (1)**
Manufacturer: **Multiteria**
Model: **HLS66 HOT**

Furnish and set in place per manufacturer's standard specifications.

1. Model HLS66 HOT Multiteria HLS66 Hot Food Counter

   Counter body, size and shape as shown on drawing, to be constructed with 1” x 1”, 16 gauge tubular stainless steel to create a heavy duty base frame. Horizontal and vertical frame work joints to be welded, ground and polished. Stainless steel apron to be provided on operator side to mount controls. Frame work to incorporate stainless steel channel at front and ends to accept laminate panels and Tightlink fastening system. Unit to have removable 18” gauge stainless steel undershelf and 6” stainless steel legs with adjustable bullet feet.

   Top to be 34" wide x 66” long and fabricated from a minimum of 14 gauge - 300 series stainless steel with 1-1/2” square turndown on all sides with corners fully welded, ground and polished. Top shall include stainless steel support channels where required and shall be mounted at 34” above finished floor. Verify height.

   (Item #34D) Wells MOD-400TDM/AF food warmer, top mount, auto-fill with ¼” inlet, (4) 12” x 20” deep drawn stainless steel wells with manifolded drains with one valve, wet operation, single control panel flush mounted in counter apron, thermostatic controls with each well individually controlled, stainless steel interior, insulated aluminum steel housing. Furnished and installed into counter by Multiteria.

   (Item 34C) Convertible operator service to self service food shield to cover length of counter, with top shelf, heat strip and LED lighting. 3/8” clear tempered glass shelf, front glass and (2) glass end panels. 1” x 2” supports. All posts, brackets and hardware to be black powder coated. Power switch for lighting mounted in counter apron.

   Signage overstructure consisting of 1” x 2” vertical support posts, with 18 gauge, matte black powder coated, radius formed canopy with ½” dia stainless steel cross struts welded to top of support posts. Canopy to cover length of counter. Overall height of overstructure to be 8’ 0” A.F.F. Verify height

requirements. 16” dia single sided sign, graphics to be determined, to be framed in 16” dia matte silver anodized signholder mounted to overstructure with fixed rods and rotating connectors.

Operator side of counter to be open storage compartment made from 18 gauge 300 series stainless steel.

Flat stainless steel work shelf, the length of counter and 8” wide to be mounted on the operator side on fold-down brackets. Top to be flush with counter top.

Counter to be provided with electrical junction box mounted in base cabinet and wired to 8’-0” cord and for hot food wells, heat lamp and lights.

Tray slide to be solid surface material, LG Hausys or Corian from categories A, B or C, with (3) stainless steel runners and 1-1/2” square turndown and shall be mounted at 30” A.F.F. on stainless steel fold-down brackets. Tray slide to be size and shape as shown on drawing.

Counter to have front, back and end panels where required. Panels shall be ¾” thick MDO, with standard laminates from Wilsonart or Formica on front of panels, and shall have matching vinyl edge banding and 20 gauge 430 stainless steel backer material screwed on panel back. Front panels shall be stationary at the top 8” for mounting tray slide, and shall be detachable at the bottom 18” with “Z” clips for convenient front access of plumbing and electrical connections. End panels shall be removable without the use of tools.

Provide 1” stainless steel strip at corner of counter on operator’s left as shown on drawing.

Provide with Tightlink interlocking mechanism between counter units.

Black powder coated toe base mounted on 16 gauge stainless steel “Z” bracket at front of counter and ends where required.

ITEM # 35 **CASHIER STATION**
Quantity: **One (1)**
Manufacturer: **Multiteria**
Model: **DTS**

Furnish and set in place per manufacturer's standard specifications.

1. Model DTS Multiteria CS30 Cashier Counter

Counter body to be as specified for item 34.1 with end to be open for cashier with ADA clearances, with undershelf to be recessed 19” for ADA clearance as shown on drawing. Back of counter to have stainless steel panel.

Top to be 30” long x 34-1/2" wide and as specified for item 34.1.

Provide with grommet hole in top as shown on drawing.

Counter to have NEMA 5-15R GFCI receptacle mounted in cabinet base, pre-wired to 8' cord and plug.

Counter to have (1) empty data cabling box with stainless steel cover plate mounted in cabinet base.

Inside of cabinet base to be lined in stainless steel.

Tray slide to be as specified for item 34.1.

Counter to have laminate panels as specified for item 34.1.

Provide 1" stainless steel strip at corner of counter on operator's right as shown on drawing.

Black powder coated toe base mounted on 16 gauge stainless steel "Z" bracket at front of counter and sides where required.

ITEM # 36 **CHEST FREEZER <Existing>**
Quantity: **One (1)**
Manufacturer: **By Owner**
Model: **TFM-41AL**

Furnish and set in place per manufacturer's standard specifications.

1. Model TFM-41AL Horizontal Freezer, -10° holding temp., tempered, hard coated, "Low-E glass, (2) angled sliding lids, 1/4 hp, 9' cord, , cUL, NSF

ITEM # 37 **MILK COOLER**
Quantity: **One (1)**
Manufacturer: **By Owner**
Model: **EXISTING**

Furnish and set in place per manufacturer's standard specifications.

1. Model EXISTING MILK COOLER

Table of Contents

MOP SINK - ADVANCE TABCO 9-OP-28 (ITEM 1) 1
HOSE REEL - FISHER 1801 (ITEM 1A) 4
SERVICE FAUCET - ADVANCE TABCO K-240 (ITEM 1B) 6
SHELF - ADVANCE TABCO K-245 (ITEM 1C) 9
HOSE REEL - FISHER 2980 (ITEM 1D) 12
GARBAGE CAN - RUBBERMAID 1792339 (ITEM 2) 14
LOCKER - NEXEL CS186AS (ITEM 3) 16
ADA EMPLOYEE LOCKER - GRAIN 6ZTE4 (ITEM 3A) 18
HAND SINK - ADVANCE TABCO 7-PS-41 (ITEM 4) 20
CLEAN DISHTABLE - CUSTOM FAB CUSTOM (ITEM 5) 23
DISHTABLE SORTING SHELF - CUSTOM FAB CUSTOM (ITEM 5A) 24
DISHWASHER, DOOR TYPE - HOBART AM15T-2 (ITEM 6) 25
CONDENSATE HOOD - HALTON CH (ITEM 6A) 34
SOILED DISHTABLE - CUSTOM FAB CUSTOM (ITEM 7) 35
PRE-RINSE - FISHER 53473 (ITEM 7A) 36
WASTE COLLECTOR - SALVAJOR S419 (ITEM 7B) 38
THREE (3) COMPARTMENT SINK - CUSTOM FAB CUSTOM (ITEM 8) 43
PRE-RINSE - FISHER 54631 (ITEM 8A) 44
FAUCET - FISHER 5414 (ITEM 8B) 46
WALK IN FREEZER - AMERICAN PANEL CUSTOM (ITEM 9) 48
FREEZER EVAPORATOR COIL - AMERICAN PANEL CTE36-69 (ITEM 9A) 50
FREEZER CONDENSOR - AMERICAN PANEL A V A25IOZXTXC (ITEM 9B) 51
(ITEM 10-12) 52
PLASTIC SHELVING UNIT - METRO 5X357GX3 (ITEM 13) 53
PLASTIC SHELVING UNIT - METRO 5X337GX3 (ITEM 14) 58
EYE WASH SHOWER STATION - BRADLEY S19-310JJ (ITEM 15) 63
FLOOR TROUGH - IMC TEDDY FT-1224-SG (ITEM 15A) 66
AIR CURTAIN - MARS AIR SYSTEMS PH1048-1EBB-PW (ITEM 16) 69
ADA WORK TABLE, 120" LONG - CUSTOM CUSTOM (ITEM 17) 70
OVERSHELF-POT RACK W/SHELF - CUSTOM FAB CUSTOM (ITEM 17A) 73
PROOFER HOLDING CABINET - WINSTON HA4022 (ITEM 18) 78
CONVECTION OVEN - BLODGETT OVEN DFG100 SINGLE (ITEM 19) 81
CONVECTION OVEN - BLODGETT OVEN DFG100 SINGLE (ITEM 19) 84
SAFETY SYSTEM MOVEABLE GAS CONNECTOR - DORMONT 1675KIT2S48PS (ITEM 19A) 87
(ITEM 20-22) 88
BOILERLESS STEAMER - GROEN (2)SSB-5GF (ITEM 23) 89
SAFETY SYSTEM MOVEABLE GAS CONNECTOR - DORMONT 1650KIT2S36PS (ITEM 23A) 94
GREASE HOOD - HALTON KVE (ITEM 24A) 95
CAPTURE JET FAN - HALTON CJF (ITEM 24A.1) 96
GREASE HOOD - HALTON KVE (ITEM 24B) 97
CAPTURE JET FAN - HALTON CJF (ITEM 24B.1) 98
EXHAUST FAN - BYGC EF (ITEM 24C) 99

Table of Contents

SUPPLY AIR FAN - BYGC SUPPLY AIR FAN (ITEM 24D) 100
FIRE SUPPRESSION SYSTEM - HALTON ANSUL/R-102 (ITEM 24E) 101
ST/ST WALL FLASHING - *CUSTSS ST/ST WALL (ITEM 24F) 102
FLOOR TROUGH - IMC TEDDY CFT-2424-SGAS (ITEM 25) 103
TILTING SKILLET, GAS - CLEVELAND RANGE SGL30T1 (ITEM 25A) 106
SAFETY SYSTEM MOVEABLE GAS CONNECTOR - DORMONT 1675KIT2S48 (ITEM 25B) 111
RANGE, 36", 6 OPEN BURNERS - SOUTHBEND 4362D (ITEM 26) 114
SAFETY SYSTEM MOVEABLE GAS CONNECTOR - DORMONT 1675KIT2S48PS (ITEM 26A) 117
WORK TABLE - CUSTOM FAB CUSTOM (ITEM 27) 118
OVERSHELF - CUSTOM FAB CUSTOM (ITEM 27A) 119
FAUCET - FISHER 60704 (ITEM 27B) 121
PAPER TOWEL - GAPACIF EMOTION (ITEM 27C) 123
ELECTRONIC FAUCET - T&S BRASS EC-3100-120X (ITEM 27D) 124
SOAP DISPENSER - BYVEN BY VENDOR (ITEM 27E) 126
WASTE BASKET - RUBBERMAID FG254300BLA (ITEM 27F) 127
WALK IN COOLER - AMERICAN PANEL CUSTOM (ITEM 28) 129
COOLER EVAPORATOR COIL - AMERICAN PANEL CTA38-88 (ITEM 28A) 131
COOLER CONDENSOR - AMERICAN PANEL FJAF-0106-CAV-020 (ITEM 28B) 132
PLASTIC SHELVING UNIT - METRO 5X367GX3 (ITEM 29) 133
(ITEM 30-32) 138
PLASTIC WITH METAL FRAME SHELVING - METRO MX1854G (ITEM 33) 139
SNEEZE GUARD - CUSTOM CUSTOM (ITEM 34A) 144
DROP-IN FROST TOP - ATLAS METAL WF-4 (ITEM 34B) 145
COLD SERVING COUNTER - MULTITERIA CLS96 COLD (ITEM 34C) 148
SNEEZE GUARD - CUSTOM CUSTOM (ITEM 34C) 149
DROP-IN HOT WELL - WELLS MOD-400TDM/AF (ITEM 34D) 150
HOT SERVING COUNTER - MULTITERIA HLS66 HOT (ITEM 34H) 153
CASHIER STATION - MULTITERIA DTS (ITEM 35) 155
CHEST FREEZER - BYOWNER TFM-41AL (ITEM 36) 156
MILK COOLER - BYOWNER EXISTING (ITEM 37) 157

RJS | BARBER ASSOCIATES

RJS | Barber Associates

Integrated Food Service Design

9/6/2013

ITEM# 1 - MOP SINK (1 REQ'D)

Advance Tabco 9-OP-28

Mop Sink, floor mounted, 28" L-R, 20" F-B, 6" high water level, free flow drain with 2" IPS outlet, stainless steel construction

WATER

	HOT SIZE	HOT AFF	HOT GPH	COLD SIZE	COLD AFF	FILTERED SIZE	FILTERED AFF	CONDENSER INLET SIZE	CONDENSER OUTLET SIZE
1									

WASTE

	INDIRECT SIZE	DIRECT SIZE
1		2"

STAINLESS STEEL

FABRICATED SERVICE & MOP SINKS

ADVANCE TABCO®
SMART FABRICATION™

Item #: _____ ***Qty #:*** _____

Model #: _____

Project #: _____

9-OP-20 Shown

9-OP-40DF Shown

9-OP-40 Shown

Notched Out Front Allows
Ease of Emptying Mop Bucket

FLOOR UNITS

FEATURES:

Floor mounted unit eliminates the need of lifting heavy containers.

Tile edge furnished on the rear.

Bowls rectangular in design for increased capacity.

CONSTRUCTION:

All TIG welded.

Welded areas blended to match adjacent surfaces and to a satin finish.

MATERIAL:

16 Gauge type “304" series stainless steel sink bowl.

18 Gauge type “304" series stainless steel sink apron.

STANDING UNITS

FEATURES:

Leg mounted design.

High back splash.

CONSTRUCTION:

All TIG welded.

Welded areas blended to match adjacent surfaces and to a satin finish.

MATERIAL:

Heavy gauge type “304" series stainless steel.

Conventional

8-OP-16

Economy

4-OP-18

16” HIGH SIDE & BACK SPLASHES FOR 9-OP SERIES MOP SINKS

16 Gauge, 300 Series Stainless Steel
Available with Back & Left Side,
Back & Right Side or Back & Both Sides
(Mounting Hardware Included)

MODEL	Fits Units:	Height Above Finished Floor (A.F.F.)
K-288LorR	9-OP-20	26”
	9-OP-40	32”
K-290LorR	9-OP-28	26”
	9-OP-48	32”
Splashes Available on All 3 Sides		
K-298	9-OP-20	26”
	9-OP-40	32”
K-299	9-OP-28	26”
	9-OP-48	32”

SERVICE & MOP SINK ACCESSORIES

MOP DRAINAGE TRAY

- 16 Gauge, 300 Series Stainless Steel
- Includes Cast 1/2” Drain & Plastic Hose
- Wall Mounted (Hardware not Included)
- 2” Tray Height with 6” Rear Splash (Overall Height)

MODEL	L x W x H	Approx. Wt.
K-243	32” x 4” x 6”	13 lbs.

FLOW RATE
9.6 GPM/
36.3 LPM

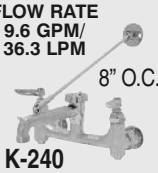

8” O.C.

K-240
SERVICE FAUCET

K-16 FLOOR MOP SINK REPLACEMENT DRAIN

K-242 MOP HANGER - 23” Wide

UTILITY SHELF - 8” WIDE

inches	mm	MODEL	Approx Wt	Approx Cubes
24”	610	K-245	12 lbs.	1
36”	914	K-246	15 lbs.	2

K-244 HOSE & HANGER

ADVANCE TABCO®
SMART FABRICATION™
www.advancetabco.com

Customer Service Available To Assist You 1-800-645-3166 8:30 am - 8:00 pm E.S.T.
Email Orders To: customer@advancetabco.com. For Smart Fabrication™ Quotes, Email To: smartfab@advancetabco.com or Fax To: 631-586-2933

NEW YORK	GEORGIA	TEXAS	NEVADA
Fax: (631) 242-6900	Fax: (770) 775-5625	Fax: (972) 932-4795	Fax: (775) 972-1578

DIMENSIONS

TOL Overall: ± .500"
Interior: ± .250"

ALL DIMENSIONS ARE TYPICAL

SUGGESTED INSTALLATION

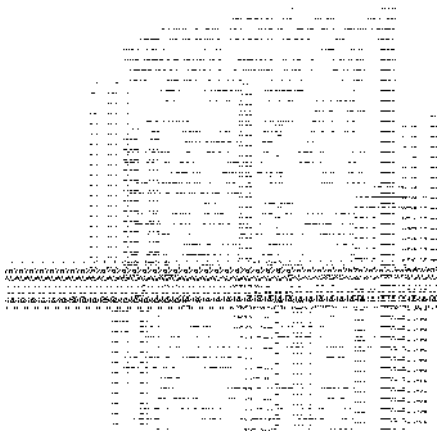

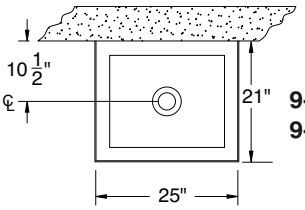

9-OP-20
9-OP-40

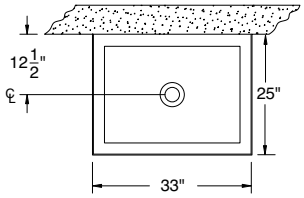

9-OP-28
9-OP-48

9-OP-20: 16" x 20" x 6" Bowl with 10" Overall Height. **Wt. 26 lbs.**
9-OP-28: 20" x 28" x 6" Bowl with 10" Overall Height. **Wt. 35 lbs.**
9-OP-40: 16" x 20" x12" Bowl with 16" Overall Height. **Wt. 45 lbs.**
9-OP-48: 20" x 28" x 12" Bowl with 16" Overall Height. **Wt. 63 lbs.**

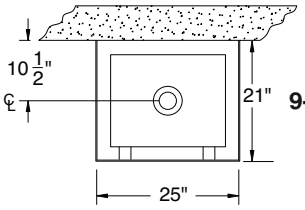

9-OP-40DF

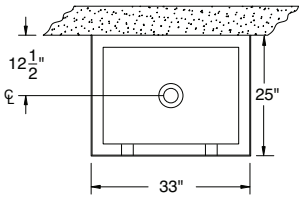

9-OP-48DF

9-OP-40DF: 16" x 20" x12" Bowl with 16" Overall Height. **Wt. 45 lbs.**
9-OP-48DF: 20" x 28" x 12" Bowl with 16" Overall Height. **Wt. 63 lbs.**

MOP SINK DRAIN ASSEMBLY

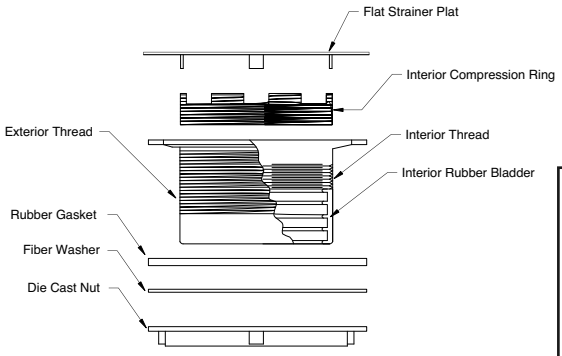

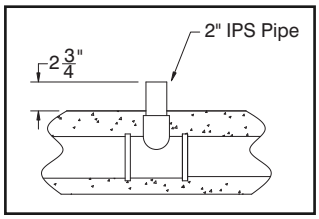

K-243 MOP DRAINAGE TRAY

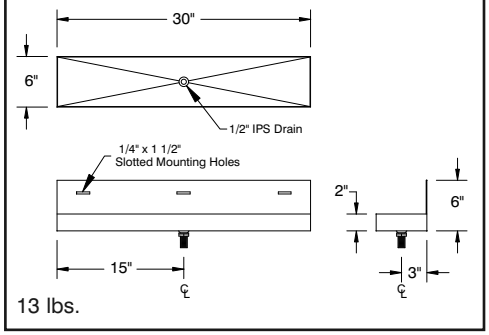

13 lbs.

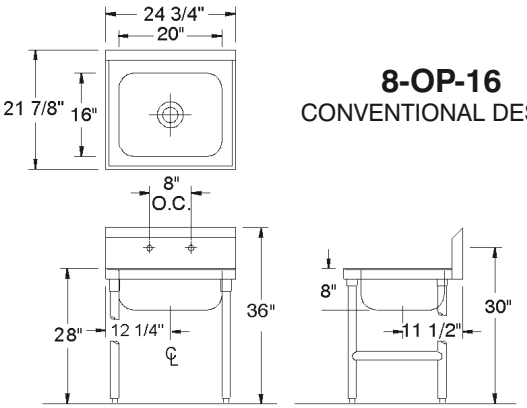

8-OP-16
CONVENTIONAL DESIGN

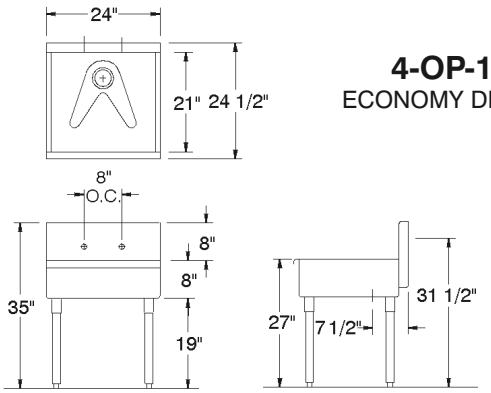

4-OP-18
ECONOMY DESIGN

1 1/2" IPS

ADVANCE TABCO
SMART FABRICATION

ADVANCE TABCO is constantly engaged in a program of improving our products. Therefore, we reserve the right to change specifications without prior notice.

200 Heartland Boulevard, Edgewood, NY 11717-8380
© ADVANCE TABCO, OCT 2012

RJS | BARBER ASSOCIATES

RJS | Barber Associates

Integrated Food Service Design

9/6/2013

ITEM# 1A - HOSE REEL (1 REQ'D)

Fisher 1801

Reel Rinse Control Unit, valves, gauges and connections are completely enclosed within a stainless steel cabinet, dual check backflow preventer, water hammer silencer, 90° panel lock, padlock hasp & finger latch, 1/2" NPT female inlets & outlets

WATER

	HOT SIZE	HOT AFF	HOT GPH	COLD SIZE	COLD AFF	FILTERED SIZE	FILTERED AFF	CONDENSER INLET SIZE	CONDENSER OUTLET SIZE
1	1/2"			1/2"					

WASTE

	INDIRECT SIZE	DIRECT SIZE
1		

SPEC. 1801 REV. B

APPLICATION:

PRODUCT NAME:

REEL RINSE CONTROL BOX ASSEMBLY

JOB NAME:

☐ _____ SPECIAL CONFIGURATION CHECK BASE MODEL AND OPTIONS

QUANTITY:

ITEM NO.

MODEL:

■ 1801

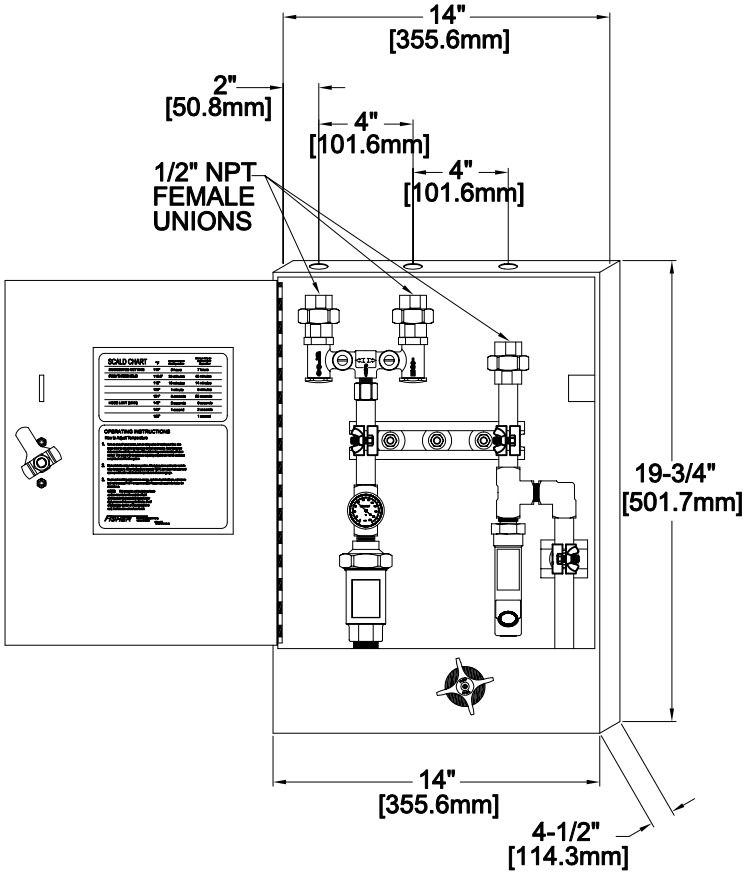

OPTIONS OR MODIFICATIONS:

☐ HANDLES (LEVER OR WRIST) CIRCLE STYLE

☐ VANDAL RESISTANT KIT

☐ OTHER _____

FEATURES:

* TEMPERATURE ADJUSTING VALVE
* THERMOMETER
* SHUT-OFF VALVE
* IN-LINE BACKFLOW PREVENTER
* PADLOCK HASP ON DOOR
* STAINLESS STEEL FRAME FOR RECESSED MOUNTING

SYSTEM LIMITS
* TEMP: 40°F MIN. TO 140°F MAX.
* PRESSURE 200 PSI MAX. STATIC

SHIPPING WEIGHT
* 36.25 LBS

ROUGH-IN's:

RECESSED MOUNTING

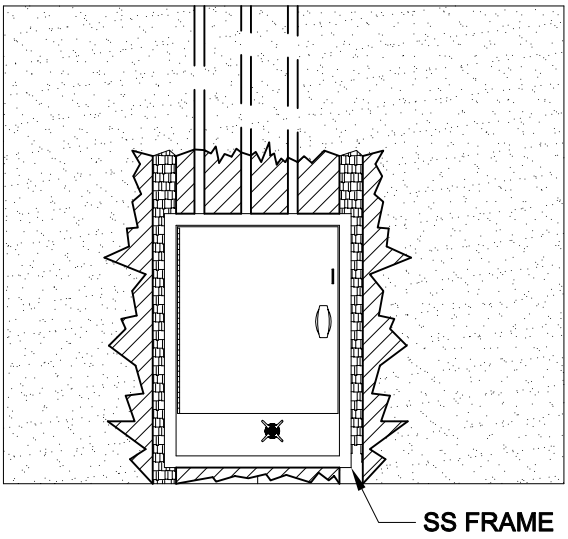

EXPOSED MOUNTING

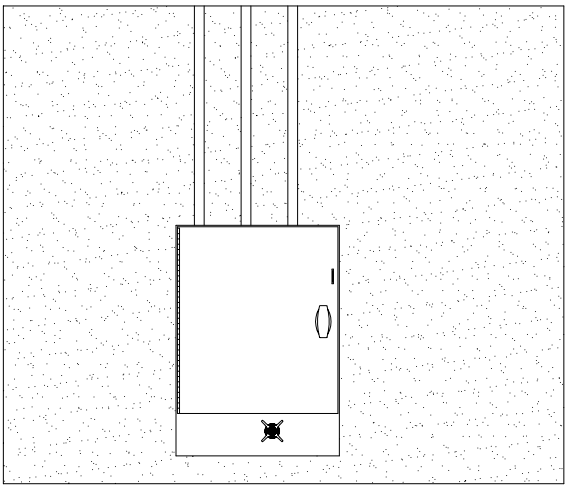

ANSI/A112.18.1M

FISHER
FISHER MANUFACTURING COMPANY
TOLL FREE: 800-421-6162 - FAX: 800-832-8238
information@fisher-mfg.com - www.fisher-mfg.com

RJS | BARBER ASSOCIATES

RJS | Barber Associates

Integrated Food Service Design

9/6/2013

ITEM# 1B - SERVICE FAUCET (1 REQ'D)

Advance Tabco K-240

Service Faucet

WATER

	HOT SIZE	HOT AFF	HOT GPH	COLD SIZE	COLD AFF	FILTERED SIZE	FILTERED AFF	CONDENSER INLET SIZE	CONDENSER OUTLET SIZE
1	1/2"			1/2"					

WASTE

	INDIRECT SIZE	DIRECT SIZE
1		

ADVANCE TABCO®
SMART FABRICATION™

SPLASH MOUNTED FAUCETS

12” Swing Spout

K-1

14” Swing Spout

K-11

3-1/2” Gooseneck

K-59

HEAVY DUTY Gooseneck

T&S

K-69

8” Swing Spout

K-101

HEAVY DUTY 14” Swing Spout

K-105

HEAVY DUTY 14” Swing Spout (T&S)

T&S

K-111

HEAVY DUTY 12” Swing Spout (T&S)

T&S

K-112

HEAVY DUTY Pre-Rinse Faucet (T&S)

T&S

K-116

K-114
Replacement Spray Head & Handle

12” Swing Spout Add-A-Faucet

K-117

16” Swing Spout

K-119

Splash Mount Swivel Gooseneck

K-121

6” Extended Spout

K-123

K-206
with Wrist Handles

Eye Wash Attachment

K-170

AC/DC powered Hands-Free Gooseneck

AC & Battery Operated!

K-175

HEAVY DUTY Extra Long Faucet

K-211

Service Faucet

K-240

Wrist handle Gooseneck

K-316

Wrist Handles Only

K-316-LU

Hands-Free Wand

K-400

HEAVY DUTY Pre-Rinse Faucet

DTA-53

K-114
Replacement Spray Head & Handle

Repair Kit For K-1, K-11, K-101, K-112, K-119 & K-211

Repair Kit can only be used on faucets purchased after 12/03

K-00

Faucet Wall Mounting Bracket

K-30

Faucet Mounting Kit K-1, K-11, K-101, K-105, K-112, K-119 & K-211

K-06

ADVANCE TABCO®
SMART FABRICATION™
www.advancetabco.com

Customer Service Available To Assist You 1-800-645-3166 8:30 am - 8:00 pm E.S.T.
Email Orders To: customer@advancetabco.com. For Smart Fabrication™ Quotes, Email To: smartfab@advancetabco.com or Fax To: 631-586-2933

NEW YORK	GEORGIA	TEXAS	NEVADA
Fax: (631) 242-6900	Fax: (770) 775-5625	Fax: (972) 932-4795	Fax: (775) 972-1578

DIMENSIONS and SPECIFICATIONS

TOL ± .125” ALL DIMENSIONS ARE TYPICAL

SPLASH MOUNTED FAUCETS

Swing Spout Faucet

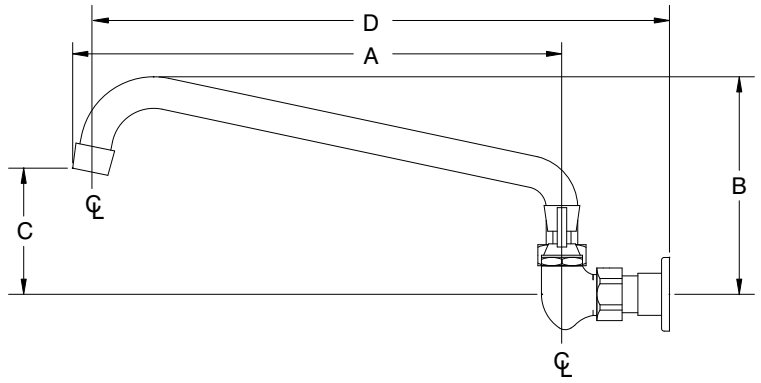

Gooseneck Faucet

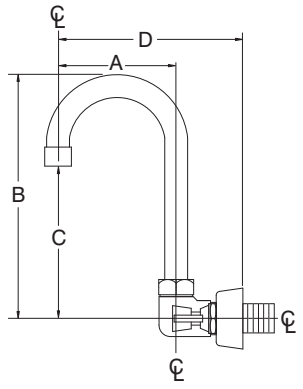

Standard Faucet conforms to NSF 61 Standard 9. An optional faucet upgrade is required for compliance to AB 1953 Standards.

For Replacement Faucets & Upgrades, Drains & Accessories visit our website at www.advancetabco.com

ALL FAUCET AERATORS CONFORM TO ASTM.A112.18.1M 2.0 GPM/7.56 LPM THREAD: 55/64 - 27 FEMALE

K-240 SERVICE FAUCET 9.6 GPM/36.3 LPM 3/4” HOSE END SPOUT

K-170 - Eye Wash Detail

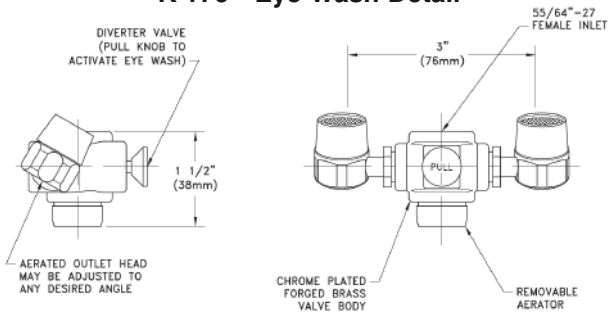

MODEL #	Description	A LENGTH	B HEIGHT	C	D	On Center Dimensions
K-00	Repair Kit For K-1, K-11, K-101, K-119 & 211	N/A	N/A	N/A	N/A	N/A
K-06	Faucet Mt. Kit for K-1, K-11, K-101, K-119 & K-211	N/A	N/A	N/A	N/A	N/A
K-1	12” Swing Spout Faucet	12”	5”	2 1/2”	14”	8” O.C.
K-11	14” Swing Spout Faucet	14”	5 1/2”	3”	16”	8” O.C.
K-59	3 1/2” Gooseneck Faucet	3 1/2”	8”	5”	6”	4” O.C.
K-69	Heavy Duty Gooseneck Faucet	3”	5”	2 3/4”	5 1/2”	4” O.C.
K-101	8” Swing Spout Faucet	8”	4 1/4”	2 1/4”	10”	8” O.C.
K-105	Heavy Duty 14” Swing Spout Faucet	14”	5”	3”	16”	8” O.C.
K-111	Heavy Duty 14” Swing Spout (T&S) Faucet	14”	8 1/4”	5 1/2”	16 1/2”	8” O.C.
K-112	Heavy Duty 12” Swing Spout Faucet	12”	5”	3”	14”	8” O.C.
K-116	Heavy Duty Pre-Rinse (T&S) Faucet	13”	34 1/2”	13 1/2”	15 3/8”	8” O.C.
K-117	Add-A-Faucet with 12” Spout Faucet	12”	N/A	N/A	N/A	N/A
K-119	16” Swing Spout Faucet	16”	6”	4”	18 1/2”	8” O.C.
K-121	Splash Mount Swivel Gooseneck Faucet	3 1/2”	8”	5 1/2”	5 3/4”	Single Hole
K-123	6” Extended Spout Faucet	6”	5”	2 1/2”	8”	4” O.C.
K-170	Eye Wash Attachment (See Above Detail)	N/A	N/A	N/A	N/A	N/A
K-175	Hands Free AC/DC Operated Faucet 6' Cord. INPUT: 100-240VAC 47-6Hz. < 1 Amp Draw. UL LISTED	4 1/2”	7”	3 3/4”	5 1/2”	Single Hole
K-206	6” Extended Spout Faucet with Wrist Handles	6”	5”	2 1/2”	8”	4” O.C.
K-211	Heavy Duty Extra Long Spout Faucet	18”	7 3/4”	5”	21”	8” O.C.
K-240	Service Faucet	6 1/2”	2 1/2”	1 3/8”	9”	8” O.C.
K-316	Wrist Handle Gooseneck Faucet	3 1/2”	8”	5”	6”	4” O.C.
K-400	Hands Free Wand	N/A	N/A	N/A	N/A	N/A
DTA-53	Heavy Duty Pre-Rinse Faucet	15”	34”	5”	34”	8” O.C.

N/A = Not Applicable To Faucet

ADVANCE TABCO SMART FABRICATION™

ADVANCE TABCO is constantly engaged in a program of improving our products. Therefore, we reserve the right to change specifications without prior notice.

200 Heartland Boulevard, Edgewood, NY 11717-8380
© ADVANCE TABCO, JANUARY 2013

RJS | BARBER ASSOCIATES

RJS | Barber Associates

Integrated Food Service Design

9/6/2013

ITEM# 1C - SHELF (1 REQ'D)
Advance Tabco K-245
Utility Shelf, 8" wide x 24" long

STAINLESS STEEL

FABRICATED SERVICE & MOP SINKS

ADVANCE TABCO®
SMART FABRICATION™

Item #: _____ ***Qty #:*** _____
Model #: _____
Project #: _____

9-OP-20 Shown

9-OP-40DF Shown

9-OP-40 Shown

Notched Out Front Allows
Ease of Emptying Mop Bucket

FLOOR UNITS

FEATURES:

Floor mounted unit eliminates the need of lifting heavy containers.

Tile edge furnished on the rear.

Bowls rectangular in design for increased capacity.

CONSTRUCTION:

All TIG welded.

Welded areas blended to match adjacent surfaces and to a satin finish.

MATERIAL:

16 Gauge type “304" series stainless steel sink bowl.

18 Gauge type “304" series stainless steel sink apron.

STANDING UNITS

FEATURES:

Leg mounted design.

High back splash.

CONSTRUCTION:

All TIG welded.

Welded areas blended to match adjacent surfaces and to a satin finish.

MATERIAL:

Heavy gauge type “304" series stainless steel.

Conventional

8-OP-16

Economy

4-OP-18

16” HIGH SIDE & BACK SPLASHES FOR 9-OP SERIES MOP SINKS

16 Gauge, 300 Series Stainless Steel
Available with Back & Left Side,
Back & Right Side or Back & Both Sides
(Mounting Hardware Included)

MODEL	Fits Units:	Height Above Finished Floor (A.F.F.)
K-288LorR	9-OP-20	26”
	9-OP-40	32”
K-290LorR	9-OP-28	26”
	9-OP-48	32”
Splashes Available on All 3 Sides		
K-298	9-OP-20	26”
	9-OP-40	32”
K-299	9-OP-28	26”
	9-OP-48	32”

SERVICE & MOP SINK ACCESSORIES

MOP DRAINAGE TRAY

- 16 Gauge, 300 Series Stainless Steel
- Includes Cast 1/2” Drain & Plastic Hose
- Wall Mounted (Hardware not Included)
- 2” Tray Height with 6” Rear Splash (Overall Height)

MODEL	L x W x H	Approx. Wt.
K-243	32” x 4” x 6”	13 lbs.

FLOW RATE
9.6 GPM/
36.3 LPM

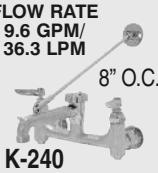

8” O.C.

K-240
SERVICE FAUCET

K-16 FLOOR MOP SINK REPLACEMENT DRAIN

K-242 MOP HANGER - 23” Wide

UTILITY SHELF - 8” WIDE

inches	mm	MODEL	Approx Wt	Approx Cubes
24”	610	K-245	12 lbs.	1
36”	914	K-246	15 lbs.	2

K-244 HOSE & HANGER

ADVANCE TABCO®
SMART FABRICATION™
www.advancetabco.com

Customer Service Available To Assist You 1-800-645-3166 8:30 am - 8:00 pm E.S.T.
Email Orders To: customer@advancetabco.com. For Smart Fabrication™ Quotes, Email To: smartfab@advancetabco.com or Fax To: 631-586-2933

NEW YORK	GEORGIA	TEXAS	NEVADA
Fax: (631) 242-6900	Fax: (770) 775-5625	Fax: (972) 932-4795	Fax: (775) 972-1578

DIMENSIONS

TOL Overall: ± .500"
Interior: ± .250"

ALL DIMENSIONS ARE TYPICAL

SUGGESTED INSTALLATION

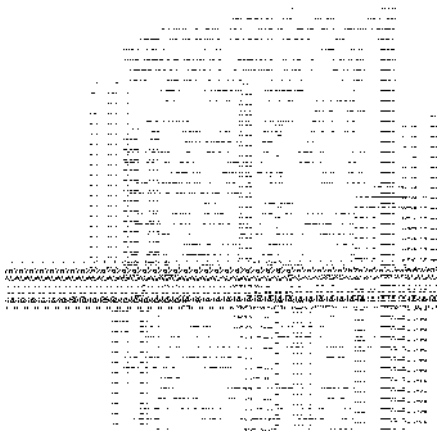

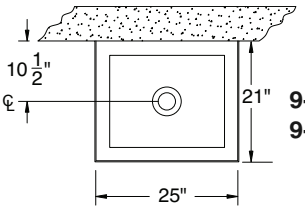

9-OP-20
9-OP-40

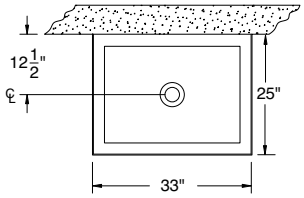

9-OP-28
9-OP-48

9-OP-20: 16" x 20" x 6" Bowl with 10" Overall Height. **Wt. 26 lbs.**
9-OP-28: 20" x 28" x 6" Bowl with 10" Overall Height. **Wt. 35 lbs.**
9-OP-40: 16" x 20" x12" Bowl with 16" Overall Height. **Wt. 45 lbs.**
9-OP-48: 20" x 28" x 12" Bowl with 16" Overall Height. **Wt. 63 lbs.**

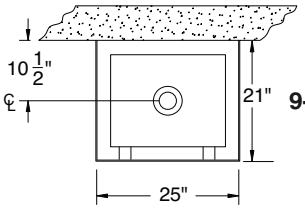

9-OP-40DF

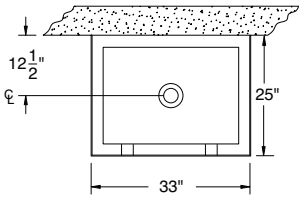

9-OP-48DF

9-OP-40DF: 16" x 20" x12" Bowl with 16" Overall Height. **Wt. 45 lbs.**
9-OP-48DF: 20" x 28" x 12" Bowl with 16" Overall Height. **Wt. 63 lbs.**

MOP SINK DRAIN ASSEMBLY

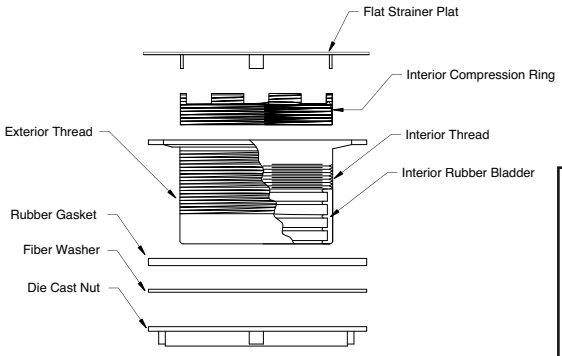

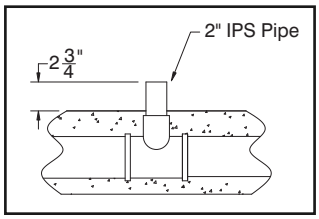

K-243 MOP DRAINAGE TRAY

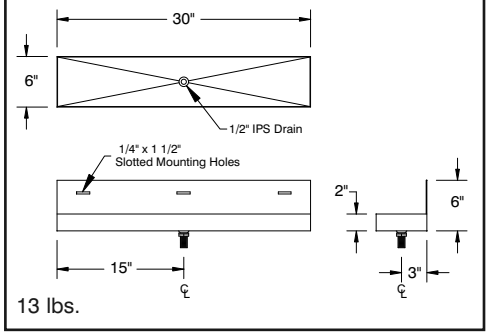

13 lbs.

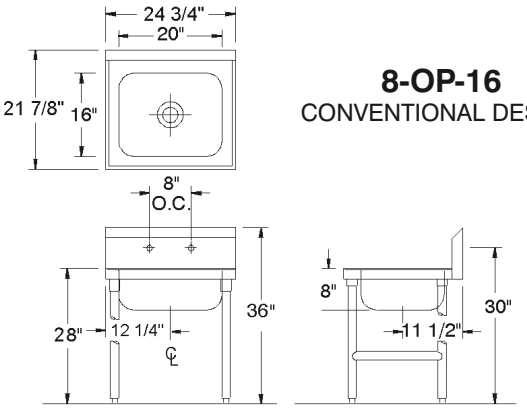

8-OP-16
CONVENTIONAL DESIGN

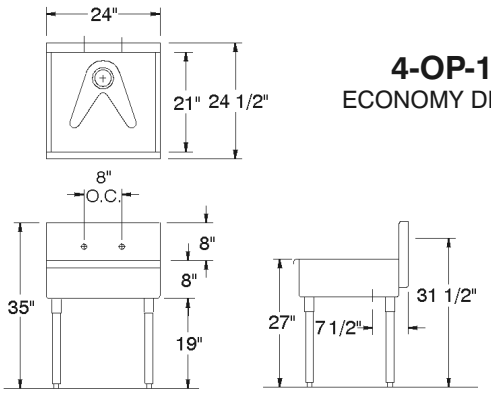

4-OP-18
ECONOMY DESIGN

1 1/2" IPS

ADVANCE TABCO
SMART FABRICATION

ADVANCE TABCO is constantly engaged in a program of improving our products. Therefore, we reserve the right to change specifications without prior notice.

200 Heartland Boulevard, Edgewood, NY 11717-8380
© ADVANCE TABCO, OCT 2012

RJS | BARBER ASSOCIATES

RJS | Barber Associates

Integrated Food Service Design

9/6/2013

ITEM# 1D - HOSE REEL (1 REQ'D)

Fisher 2980

Hose Reel Assembly, exposed reel rinse with spray valve, reel is white powder coated finish, 35 feet of 3/8" ID, 3 ply, 2 braid hose, working pressure of 200 PSI, withstands 140° F water temperature, 1/2" NPT female

WATER

	HOT SIZE	HOT AFF	HOT GPH	COLD SIZE	COLD AFF	FILTERED SIZE	FILTERED AFF	CONDENSER INLET SIZE	CONDENSER OUTLET SIZE
1	1/2"								

WASTE

	INDIRECT SIZE	DIRECT SIZE
1		

SPEC. 2980 REV. D

APPLICATION:

JOB NAME:

QUANTITY:

ITEM NO.

PRODUCT NAME:

EXPOSED REEL RINSE WALL
MOUNTED WITH SPRAY VALVE

☐ _____ SPECIAL CONFIGURATION
CHECK BASE MODEL AND OPTIONS

MODEL:

■ 2980

OPTIONS OR MODIFICATIONS:

☐ BRUSH

☐ OTHER _____

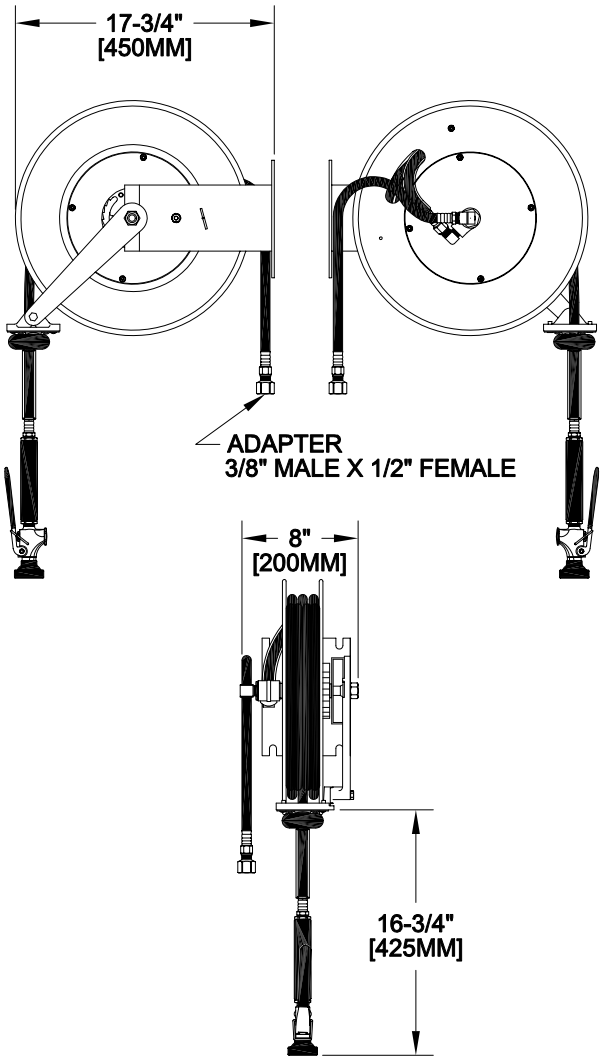

ROUGH-IN: SEE MOUNTING PLATE BELOW

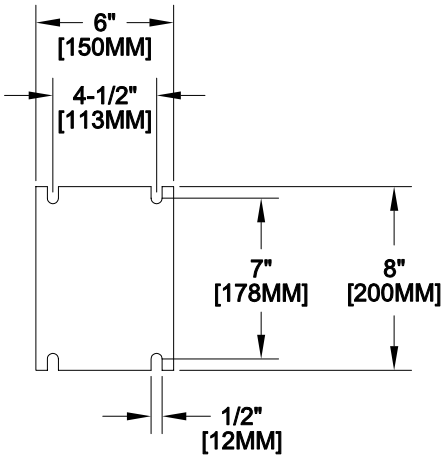

FEATURES

REEL
* SELF-LOCKING
* EXPOSED HOSE
* 35' LENGTH REEL HOSE
* 19" LENGTH INLET HOSE
* 3 PLY FIBER REINFORCED RUBBER HOSE
* ADJUSTABLE BALL STOP

PRO SPRAY VALVE
* NOZZLE THREADED INTO VALVE
* 2.65 GPM AT 80 PSI
* SHOWER SPRAY PATTERN

SYSTEM LIMITS
* TEMP: 40°F MIN. TO 140°F MAX.
* PRESSURE: 200 PSI MAX. STATIC

SHIPPING WEIGHT
* 34.0 LBS

ANSI/A112.18.1M

FISHER
FISHER MANUFACTURING COMPANY
TOLL FREE: 800-421-6162 - FAX: 800-832-8238
information@fisher-mfg.com - www.fisher-mfg.com

RJS | BARBER ASSOCIATES

RJS | Barber Associates

Integrated Food Service Design

9/6/2013

ITEM# 2 - GARBAGE CAN (3 REQ'D)

Rubbermaid 1792339

Glutton® Recycling Station, two stream sortation, 46 gallon, hinged lid, includes item-specific top, symbol label pack, word label pack in English, Spanish, French, impact resistant plastic, blue

Glutton® Recycling Stations

Support your facility's recycling program, help reduce labor costs, and improve worker well-being.

- High-capacity, all-in-one centralized solutions for efficient waste sortation
- Includes designated, item-specific tops, symbol label pack, and word label pack in English, French, and Spanish that provide visual cues and encourage compliance
- Hinged lid allows easy access during emptying

Recycle Label Kit pg. 193

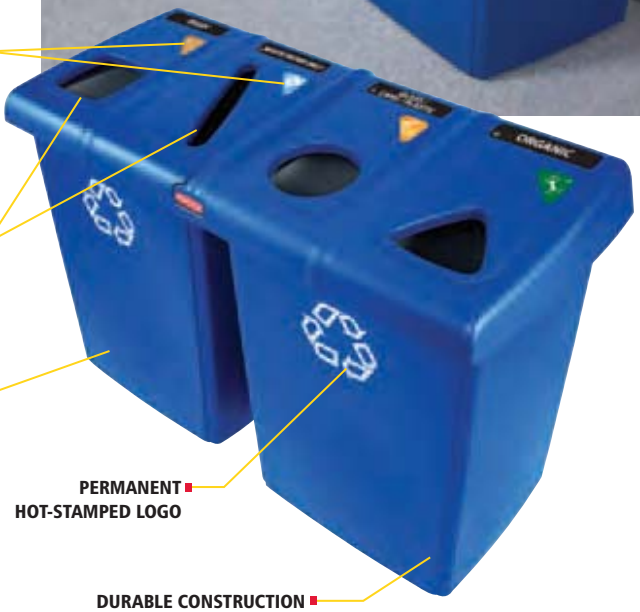

FLEXIBLE LABELING
Includes separate color-coded symbol and word labels for customizing the Recycling Station based on facility needs.

MULTIPLE STREAM SORTATION
Use any combination of the restrictive-opening tops to sort up to four separate waste streams. Tops snap securely into lid.

HIGH-CAPACITY COLLECTION
Improves productivity by reducing the frequency of trips to empty the filled containers. Holds up to 92 gallons of waste.

PERMANENT HOT-STAMPED LOGO

DURABLE CONSTRUCTION
Features traditional Rubbermaid Commercial Products strength and durability in easy-to-clean, impact-resistant post-consumer plastic.

TWO STREAM GLUTTON® RECYCLING STATION
1792340

New!

FOUR STREAM GLUTTON® RECYCLING STATION
1792372

EASY TO EMPTY
Center hinge allows the lid to be opened from either side for easy access to waste. Eliminates the need to remove the lid during emptying and helps reduce worker strain and trip-and-fall hazards.

No.	Color	Description	U.S. Dimensions	Metric Dimensions	Capacity (Gal)	Capacity (Liters)	Pack
1792339	BLUE	Two Stream Glutton® Recycling Station	26.8" l x 23.6" w x 35.5" h	68.1 cm x 59.9 cm x 90.2 cm	46	174.1	1
1792340	GREEN	Two Stream Glutton® Recycling Station	26.8" l x 23.6" w x 35.5" h	68.1 cm x 59.9 cm x 90.2 cm	46	174.1	1
1792371	BEIGE	Two Stream Glutton® Recycling Station	26.8" l x 23.6" w x 35.5" h	68.1 cm x 59.9 cm x 90.2 cm	46	174.1	1
1792372	BLUE	Four Stream Glutton® Recycling Station	53" l x 24" w x 35.5" h	134.6 cm x 61 cm x 90.2 cm	92	348.3	1
1792373	GREEN	Four Stream Glutton® Recycling Station	53" l x 24" w x 35.5" h	134.6 cm x 61 cm x 90.2 cm	92	348.3	1
1792374	BEIGE	Four Stream Glutton® Recycling Station	53" l x 24" w x 35.5" h	134.6 cm x 61 cm x 90.2 cm	92	348.3	1
1792975	N/A	Recycle Label Kit	N/A	N/A	N/A	N/A	8

RJS | BARBER ASSOCIATES

RJS | Barber Associates

Integrated Food Service Design

9/6/2013

ITEM# 3 - LOCKER (3 REQ'D)

Nexel CS186AS

Capital Locker, double tier, (2) doors, 12"Wx18"Dx72"H opening, 36"W O.A., 4-knuckle hinges w/welded door frame, recessed handle, pad lockable friction hasp, 2 sets of louvers, steel w/powder coat finish, 6" legs, assembled

ACCESSORIES

Mfr	Qty	Model	Spec
Nexel	3		Tan
Nexel	3	FB12	Front Base, 12"W, to enclose base on lockers
Nexel	3	EB18	End Base, 18"W, to enclose base on lockers
Nexel	3	ST1218	Slope Top Kit, 12"W x 18"D, includes 3 tops, 2 sides & 3 backs

LOCKERS

Capital Steel Lockers

Model CS151AST

Model CS186AST

FIVE KNUCKLE HINGES WITH LAPPED AND WELDED STEEL DOOR FRAME

COAT ROD

HAT SHELF AND COAT HOOKS

CATCH-FREE RECESSED HANDLE

Our Capital lockers provide performance and reliability. Reinforced, welded frame-and-door assemblies ensure maximum security. Doors are styled with a catch-free recessed handle and padlockable friction hasp for quiet operation and ventilated with 2 sets of louvers. Durable powder coat finish resists wear and scratches for years of attractive service. Legs add 6" to height. Includes blank number plates. Optional locks, numbered plate kits and bases sold separately. Choose from tan or gray and assembled or ready-to-assemble styles. **Single Tier** lockers include a hat shelf and double and single-prong coat hooks (the 18" deep model also includes coat rod). **Double Tier** lockers include double and single-prong coat hooks. **Assembled lockers are not returnable.**

Opening W" x D" x H"	Overall Width"	Doors	Wt.	READY TO ASSEMBLE Model	ASSEMBLED Model
Single Tier					
12 x 15 x 72	12	1	50	CS151KD	CS151AS
12 x 15 x 72	36	3	147	CS153KD	CS153AS
12 x 18 x 72	12	1	53	CS181KD	CS181AS
12 x 18 x 72	36	3	162	CS183KD	CS183AS
Double Tier					
12 x 15 x 36	12	2	52	CS152KD	CS152AS
12 x 15 x 36	36	6	149	CS156KD	CS156AS
12 x 18 x 36	12	2	55	CS182KD	CS182AS
12 x 18 x 36	36	6	162	CS186KD	CS186AS

Specify color suffix Gray (G) or Tan (T)

Model CS153ASG

Accessories

CLOSED BASES

Encloses the area between the locker legs for a clean appearance and easier maintenance. Order by locker width and depth. Available in tan or gray.

Model	Description
FB12	12"W Front Base
EB15	15"D End Base
EB18	18"D End Base

Specify color suffix Gray (G) or Tan (T)

SLOPE TOP KITS

Up to 3 lockers wide. Includes 3 tops, 2 sides and 3 backs

Model	Opening Width"	Depth"
ST1212	12	12
ST1215	12	15
ST1218	12	18
ST1518	15	18

Specify color suffix Gray (G) or Tan (T)

NUMBERED PLATE KITS

Numbered aluminum plates. Includes rivets. Model NPK100 includes rivet gun.

Model	Description
NPK100	Numbered 1–100
NPK200	Numbered 101-299
NPK300	Numbered 300-499

LOCKS

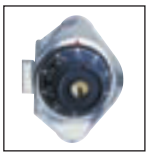

Available in 2 styles: Built in Combination Lock includes a preset combination.

Mode	Description
BCL1930	Built-in Combo Lock Six tier
BCL1931	Built-in Combo Lock Single/Double/Triple tier

RJS | BARBER ASSOCIATES

RJS | Barber Associates

Integrated Food Service Design

9/6/2013

ITEM# 3A - ADA EMPLOYEE LOCKER (1 REQ'D)

Grainger 6ZTE4

Handicapped Accessible Locker Accessories:

1. Where metal lockers are indicated with the international symbol of accessibility, comply with the following:

a. Provide not less than one shelf located no higher than 48 inches above the finished floor.

b. Provide one shelf located at the bottom of the locker no lower than 15 inches above the finished floor.

c. Where hooks, coat rods, or additional shelves are provided, locate no higher than 48 inches above the floor.

d. Apply a decal with the international symbol of accessibility to the face of the locker door.

e. Provide hardware that does not require tight grasping, pinching, or twisting of the wrist, and that operates with a force of not more than 5 lbf, as follows:

1) Provide a battery operated one-touch button lock.

2) Include a user button key that will unlock the deadbolt for 10 seconds before automatically relocking the vertical locking bar.

a) Include a time-set button key to allow for re-setting of time delay.

3) Include a time management button key that allows access to all locks in the system.

4) Include a programming button key for registering user and management button keys.

5) Subject to compliance with requirements, provide “Digilock T-Series” by Digilock, in model of suitable for locker type.

SPECIALTY LOCKERS / LOCKER BENCHES

LYON Workspace Products

Note: Specifications for lockers on this page are available upon request.

ADA Lockers
provide compliant access. Contact Lyon Workspace for availability of ADA compliant features on other locker types and sizes.

Deluxe Club Locker
Includes; door trays, mirror, towel bar in addition to large, roomy interiors for apparel, footwear, equipment and personal belongings. Lockable inside compartment and double-hung doors include padlock attachments, may also be fitted with built-in key locks or combination locks and number plates. Available: 24" w, and 18" and 21" d, and 60"h or 72" h.

Add 6" to height for legs when desired.

Two Person Lockers
are only 15" wide, with two full length coat compartments and two separate compartments at top. Doors are hinged in the center allowing simultaneous access for both users.

Locker Sizes *(per opening)*

W"	x	D"	x	H"
15	x	12	x	60
15	x	15	x	60
15	x	18	x	60
15	x	21	x	60
15	x	12	x	72
15	x	15	x	72
15	x	18	x	72
15	x	21	x	72

SPECIFICATION SUMMARY

Laminated Hardwood Top – shall have clear hardwood tops 9-1/2" wide by 1-1/4" thick finished with two coats of acrylic finish and available in lengths from 3' to 12'.

Plastic Laminate Top – shall be color matched plastic laminate, or wood-grain plastic laminate, over laminated hardwood core. Long sides shall have full 180° soft edge. Tops shall be 12'w x 1-3/4"h and available in lengths from 3' to 12'.

Steel Pedestals – Spaced on not more than 6' centers. Overall height shall be 17-3/4". Finish of pedestals shall be same color as lockers. Steel pedestal base shall be 14-gauge steel with 1-5/8" tubing uprights.

Heavy-Duty Pedestals – Single piece cast iron construction. Spaced on maximum 6' centers. 2-1/4" diameter post with 6" diameter top and bottom. 3/16" material thickness.

Aluminum Bench Top – 1-1/4"h x 9.5" wide aluminum alloy with a clear anodic coating.

Aluminum Bench Pedestals – Pedestals shall be two pieces of anodized aluminum extrusion (6105-T5) 2-1/4" x 3/4" formed and unit-welded. Base measures 12-5/8"w x 14-5/8"h. Optional rubber feet and/or concrete wedge anchor.

Note: Each pedestal shall be attached to top by screws and shall be anchored to floor by suitable anchors.

Laminated Hardwood Top
9-1/2" deep x 18" high, from 3 to 12 feet in length in 1 foot increments, deliver all the versatility and performance required for varying floor plans and locker arrangements.

Plastic Laminate Top
Plastic laminate over hardwood core. 12" wide x 18" high, and 3' to 12' long in 1 ft. increments.

PEDESTALS FOR LAMINATED HARDWOOD AND PLASTIC LAMINATE TOPS

Steel Pedestals

Heavy-Duty Pedestals

Aluminum Pedestals

ALUMINUM BENCH

Anodized Aluminum Design
Rustproof, anodized aluminum is light, yet incredibly strong and easy to maintain in almost any environment. One piece bench stands are secured to pedestal base with adjustable clamps. Rounded edges and center traces provide comfortable, skid resistant seating. Use as portable bench or install as a fixed position unit.

Aluminum Pedestals

RJS | BARBER ASSOCIATES

RJS | Barber Associates

Integrated Food Service Design

9/6/2013

ITEM# 4 - HAND SINK (1 REQ'D)

Advance Tabco 7-PS-41

Physically Challenged Hand Sink, wall model, 14" long x 16" front-to-back x 6-1/4" deep, 18 gauge stainless steel construction, electronic faucet (battery & 110v options both supplied), deck mounted soap dispenser (pump), undermounted paper towel dispenser, basket drain, wall brackets, NSF and CSA listed

ELECTRICAL

	VOLTS	CYCLE	PHASE	CONN	AFF	NEMA	AMPS	KW	HP	MCA	MOCP
1	110	60	1								

WATER

	HOT SIZE	HOT AFF	HOT GPH	COLD SIZE	COLD AFF	FILTERED SIZE	FILTERED AFF	CONDENSER INLET SIZE	CONDENSER OUTLET SIZE
1	1/2"			1/2"					

WASTE

	INDIRECT SIZE	DIRECT SIZE
1		1-1/2"

ADVANCE TABCO®
SMART FABRICATION™

STAINLESS STEEL

HAND SINKS

A.D.A COMPLIANT LAVATORIES

7-PS-25

7-PS-75

7-PS-26

Item #: _____ *Qty #:* _____

Model #: _____

Project #: _____

FEATURES:

One piece **Deep Drawn** sink bowl design.

Sink bowl is 16" x 14" x 5".

All sink bowls have a large liberal radii with a minimum dimension of 2" and are rectangular in design for increased capacity.

Keyhole wall mount bracket.

1 1/2" stainless steel drain with strainer plate.

Additional Specific Features:

7-PS-25 6" Extended deck mounted gooseneck faucet with wrist handles & deck mounted liquid soap dispenser.

7-PS-26 includes a "Hands Free" AC/DC operated gooseneck faucet & deck mounted, liquid soap dispenser.

7-PS-75 Sink Only. Faucet not included. Three 1-3/8"dia. Holes Punched.

7-PS-41 includes a "Hands Free" AC/DC operated gooseneck faucet & deck mounted, liquid soap dispenser.

Front loading paper towel dispenser (Standard C-Fold Towels).

Stainless Steel Skirt with Removable Access Panel and enclosed bottom for storage. Optional **TA-14** lock available.

7-PS-46 6" Extended splash mounted gooseneck faucet with wrist handles & deck mounted liquid soap dispenser.

Front loading paper towel dispenser (Standard C-Fold Towels).

Stainless Steel Skirt with Removable Access Panel and enclosed bottom for storage. Optional **TA-14** lock available.

CONSTRUCTION:

All TIG welded.

Welded areas blended to match adjacent surfaces and to a satin finish.

Die formed Countertop Edge with a 3/8" No-Drip offset.

Bowl made from One sheet of stainless steel - No Seams.

MATERIAL:

Heavy gauge type 304 series stainless steel.

Wall mounting bracket is Galvanized and of offset design.

All fittings are brass / chrome plated unless otherwise indicated.

MECHANICAL:

Faucet supply is 1/2" IPS male thread hot and cold.

FRONT LOADING
PAPER TOWEL DISPENSER UNITS

7-PS-41

7-PS-46

Optional A.D.A. Compliant Bubbler can be added to the 7-PS-25, 7-PS-26 & 7-PS-75 Only Use Model # K-47

Standard Faucet conforms to NSF 61 Standard 9. An optional faucet upgrade is required for compliance to AB 1953 Standards.

For Replacement Faucets & Upgrades, Drains & Accessories visit our website at www.advancetabco.com

ADVANCE TABCO®
SMART FABRICATION™
www.advancetabco.com

Customer Service Available To Assist You 1-800-645-3166 8:30 am - 8:00 pm E.S.T.
Email Orders To: customer@advancetabco.com. For Smart Fabrication™ Quotes, Email To: smartfab@advancetabco.com or Fax To: 631-586-2933

NEW YORK	GEORGIA	TEXAS	NEVADA
Fax: (631) 242-6900	Fax: (770) 775-5625	Fax: (972) 932-4795	Fax: (775) 972-1578

DIMENSIONS and SPECIFICATIONS

TOL Overall: ± .500" Interior: ± .250" **FITTINGS SUPPLIED AS SHOWN** **ALL DIMENSIONS ARE TYPICAL**

7-PS-25

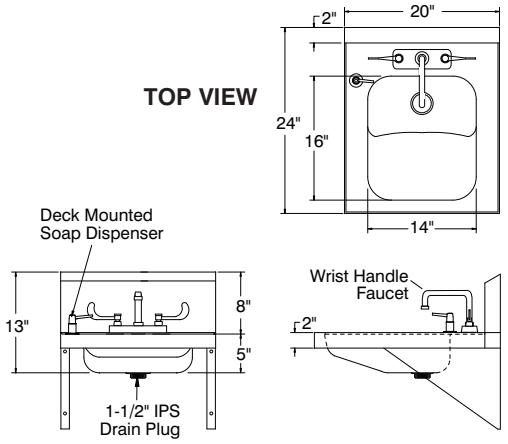

25 lbs.

7-PS-26

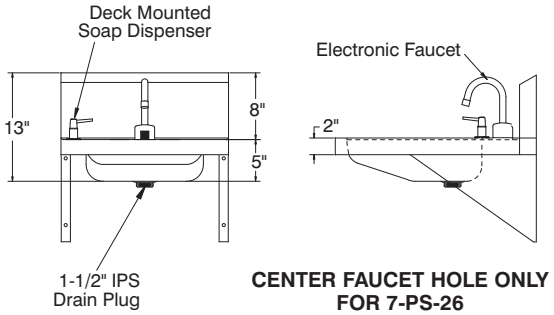

CENTER FAUCET HOLE ONLY FOR 7-PS-26

25 lbs.

7-PS-75

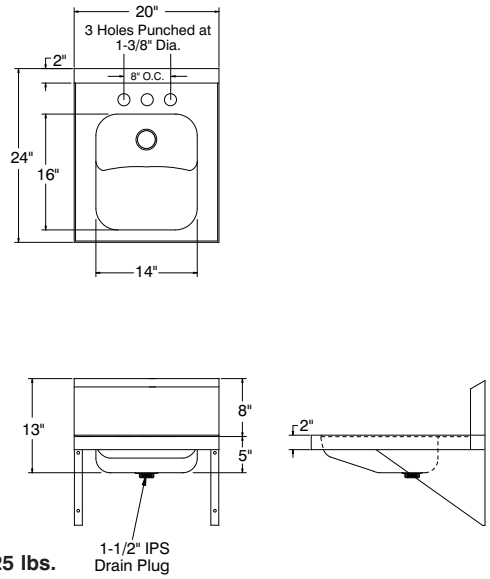

25 lbs.

Optional 8" O.C. Faucets Available

Heavy Duty 5-1/2" Gooseneck

K-132

Heavy Duty 9" Swing Spout

K-133

7-PS-41

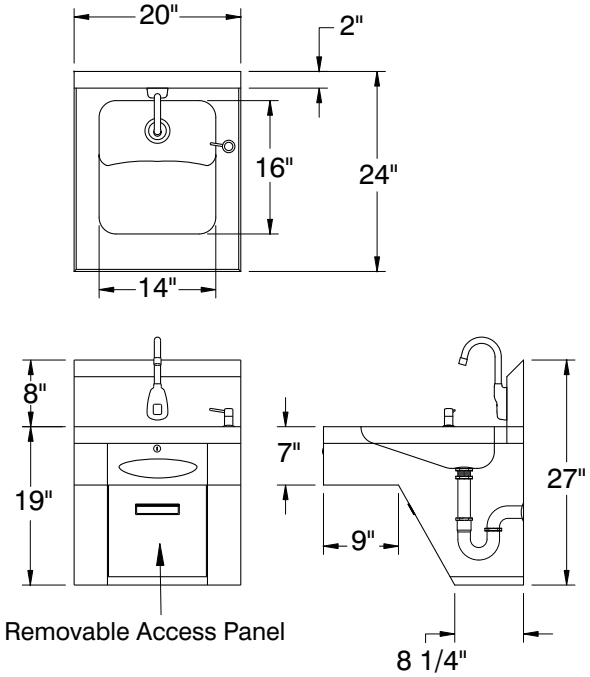

43 lbs.

7-PS-46

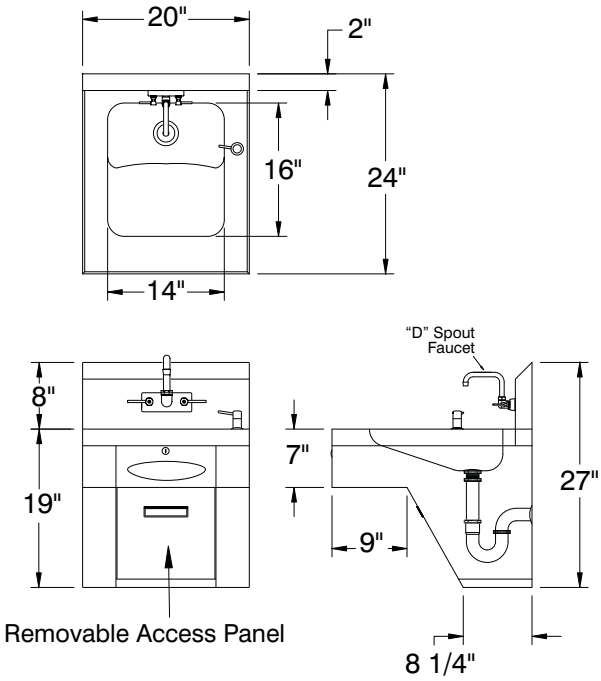

43 lbs.

ADVANCE TABCO
SMART FABRICATION™

ADVANCE TABCO is constantly engaged in a program of improving our products. Therefore, we reserve the right to change specifications without prior notice.

RJS | BARBER ASSOCIATES

RJS | Barber Associates

Integrated Food Service Design

9/6/2013

ITEM# 5 - CLEAN DISHTABLE (1 REQ'D)

Custom Fab CUSTOM

Straight-Clean Dishtable, right-to-left, 10-1/2" backsplash, 3" rolled front & side rims, stainless steel legs, with stainless steel crossrails, 72" long, 14/304 stainless steel

RJS | BARBER ASSOCIATES

RJS | Barber Associates

Integrated Food Service Design

9/6/2013

ITEM# 5A - DISHTABLE SORTING SHELF (1 REQ'D)

Custom Fab CUSTOM

Sorting Shelf, traditional solid design, 58" long with drain.

RJS | BARBER ASSOCIATES

RJS | Barber Associates

Integrated Food Service Design

9/6/2013

ITEM# 6 - DISHWASHER, DOOR TYPE (1 REQ'D)

Hobart AM15T-2

Dishwasher, door type, Tall Chamber, hot water/chemical sanitizing, 58-65 racks/hour, straight-thru or corner, solid-state controls with digital status, with booster heater, electric tank heat, auto-fill, stainless steel tank, frame, doors & feet, 208-240/60/3, sheet pan rack, ENERGY STAR®

ACCESSORIES

Mfr	Qty	Model	Spec
Hobart	1		Standard warranty - 1-Year parts, labor & travel time during normal working hours within the USA
Hobart	1	DWT-AM15	Drain water tempering kit
Hobart	1		On-site DWT installation (by local Hobart Service Office if within 50 mile radius and done during normal business hours), only with machine purchase (if purchased separately local installation rates will apply)
Hobart	1	PRESREG-3/40BR	3/4" brass pressure regulator
Hobart	1	SPEC-KIT	Single point electrical connect AM15 kit (field installation required) (3 phase booster machines only)

ELECTRICAL

	VOLTS	CYCLE	PHASE	CONN	AFF	NEMA	AMPS	KW	HP	MCA	MOCP
1	208-240	60	3	Direct			20.4	8.5			
2	208-240	60	3	Direct			45.4	5	2		

ELECTRICAL 1 REMARKS

Booster heater

ELECTRICAL 2 REMARKS

Tank heat & motor

WATER

	HOT SIZE	HOT AFF	HOT GPH	COLD SIZE	COLD AFF	FILTERED SIZE	FILTERED AFF	CONDENSER INLET SIZE	CONDENSER OUTLET SIZE
1	3/4"		42.9/48.1	1/2"					

WASTE

	INDIRECT SIZE	DIRECT SIZE
1	1-1/2"	

Item # _____

Quantity _____

C.S.I. Section 11400

HOBART
701 S Ridge Avenue, Troy, OH 45374
1-888-4HOBART • www.hobartcorp.com

AM SELECT TALL DISHWASHER

STANDARD FEATURES

- .74 gallons per rack final rinse water
- 58 racks per hour – hot water sanitizing
- 65 racks per hour – chemical sanitizing
- NSF pot and pan listed for 2-, 4- & 6- minute cycles
- Timed wash cycles for 1, 2, 4 or 6 minutes
- 27" door opening for 18" x 26" sheet pans or 60 quart mixing bowl
- Solid state, integrated controls with digital status indicators
- Self-draining, high efficiency stainless steel pump and stainless steel impeller
- Stainless steel drawn tank, tank shelf, chamber, trim panels, frame and feet
- Spring counterbalanced chamber with polyethylene guides
- Revolving, interchangeable upper and lower anti-clogging wash arms
- Revolving, interchangeable upper and lower rinse arms
- Slanted, self-locating, one-piece scrap screen and basket system
- Automatic fill
- Door actuated start
- Automatic drain closure
- Vent fan control
- External booster activation
- Delime cycle
- Service diagnostics
- NAFEM Data Protocol capable
- Straight-through or corner installation
- Hot water or chemical sanitation
- Sheet pan rack

VOLTAGE

- ❑ 208-240/60/1
- ❑ 208-240/60/3
- ❑ 480/60/3
- ❑ 200-240/50/3*
- ❑ 380-415/50/3*

*Not submitted for UL/CUL Listing

MODEL

- ❑ AM15T

OPTIONS AT EXTRA COST

- ❑ Gas heat
- ❑ Sense-A-Temp™ 70°F rise electric booster heater
- ❑ Single point electrical connection for booster equipped machines (3 phase only)

ACCESSORIES

- ❑ ¾" pressure regulator valve
- ❑ Peg rack
- ❑ Combination rack
- ❑ Sheet pan rack
- ❑ Splash shield for corner installations
- ❑ Flanged and seismic feet
- ❑ End of cycle audible alarm (field activated)
- ❑ Delime notification (field activated)
- ❑ Drain water tempering kit

Specifications, Details and Dimensions on Inside and Back.

HOBART

AM SELECT TALL DISHWASHER

AM SELECT TALL DISHWASHER – ELECTRIC

HOBART
701 S Ridge Avenue, Troy, OH 45374
1-888-4HOBART • www.hobartcorp.com

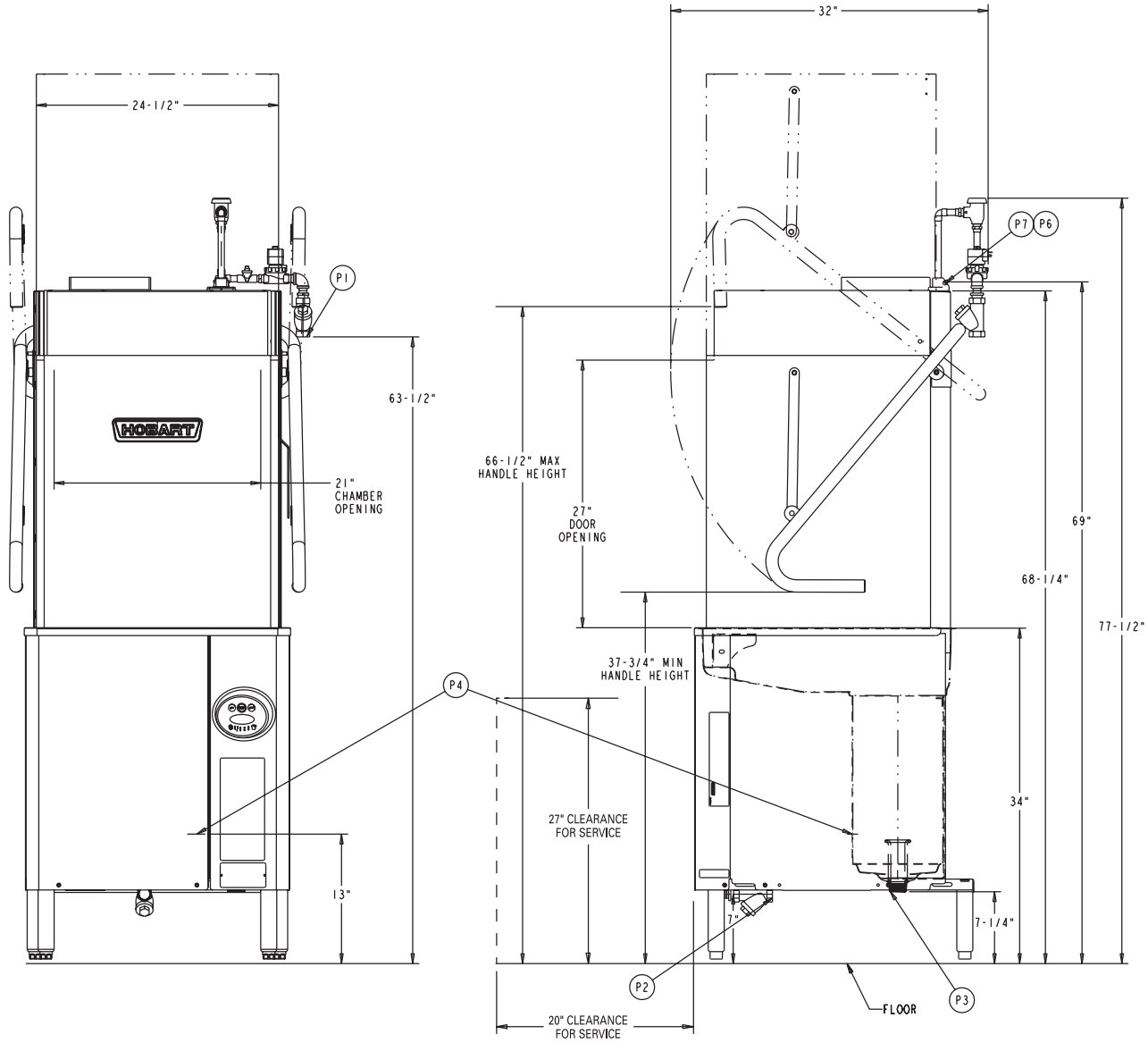

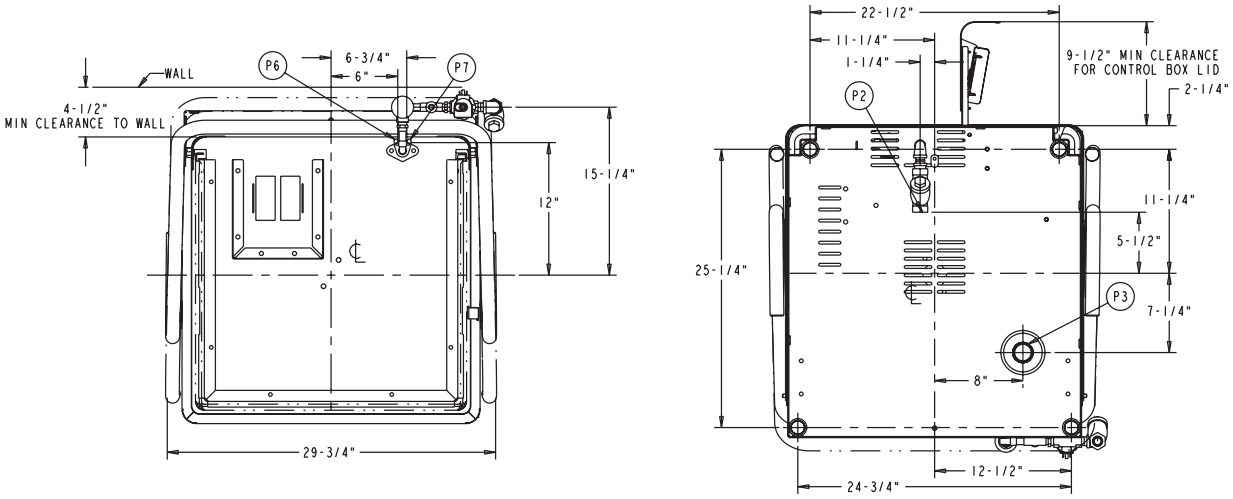

HOBART
701 S Ridge Avenue, Troy, OH 45374
1-888-4HOBART • www.hobartcorp.com

AM SELECT TALL DISHWASHER – ELECTRIC

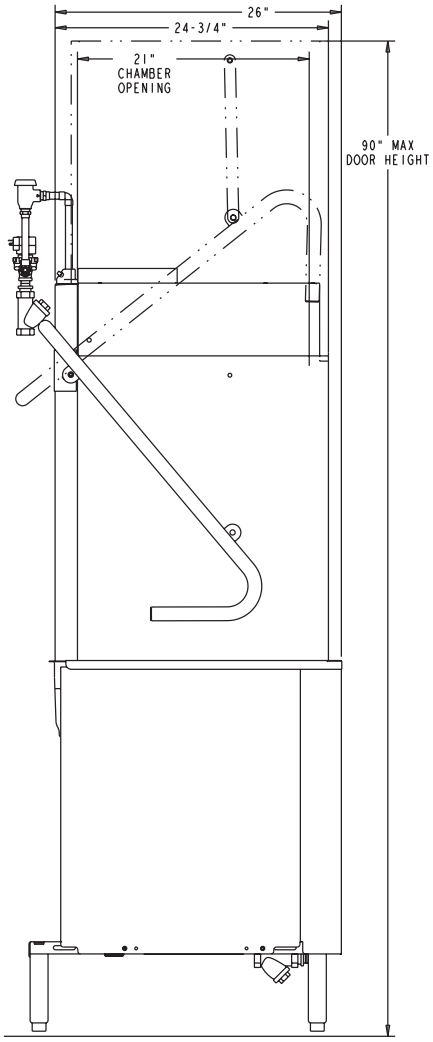

WARNING

ELECTRICAL AND GROUNDING CONNECTIONS MUST COMPLY WITH THE APPLICABLE PORTIONS OF THE NATIONAL ELECTRICAL CODE AND/OR OTHER LOCAL ELECTRICAL CODES.

PLUMBING CONNECTIONS MUST COMPLY WITH APPLICABLE SANITARY, SAFETY, AND PLUMBING CODES.

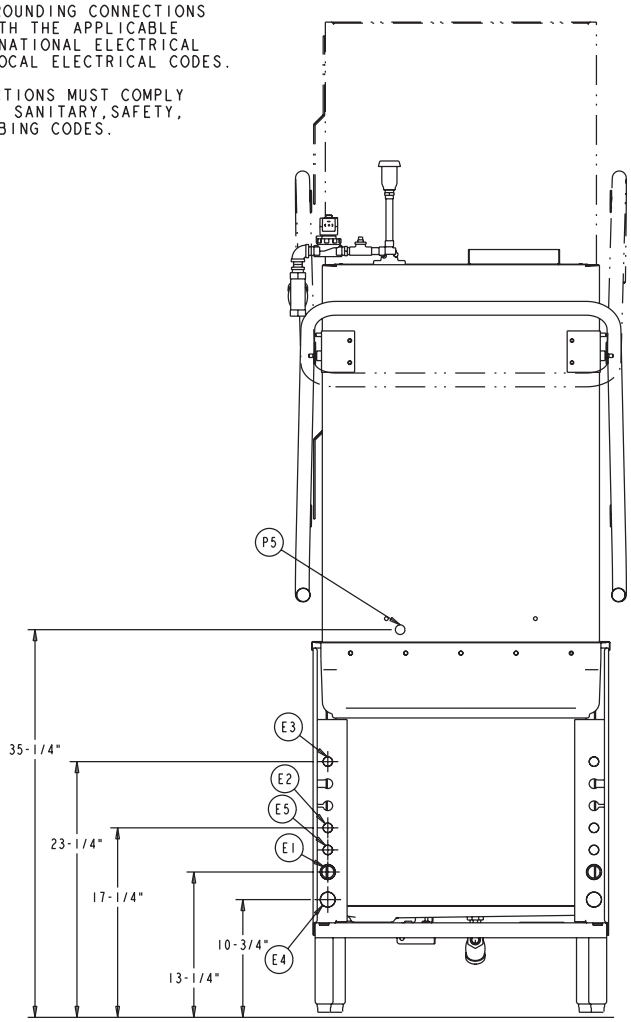

CONNECTION INFORMATION
(*AFF - ABOVE FINISHED FLOOR)

LEGEND *(see page 6 for further details)*

E1 ELECTRICAL CONNECTION: MOTORS & CONTROLS (INCLUDING ELETRIC HEAT). 1" OR 3/4" CONDUIT HOLE.

E2 ELECTRICAL CONNECTION: VENT FAN CONTROL, 1/2" CONDUIT HOLE. (VFC1 & VFC2) 1.5 AMPS @ NAMEPLATE SUPPLY VOLTAGE, "ON"

E3 ELECTRICAL CONNECTION: RINSE AGENT & SANITIZER FEEDERS, 1/2" CONDUIT HOLE. (DPS1 & DPS2) 1.5 AMPS @ NAMEPLATE SUPPLY VOLTAGE, (RPS1 & RPS2) 1.5 AMPS @ NAMEPLATE SUPPLY VOLTAGE

E4 ELECTRICAL CONNECTION: ELECTRIC BOOSTER, (NOT AVAILABLE WITH GAS HEAT MACHINE) 1" CONDUIT HOLE.

E5 ELECTRICAL CONNECTION: EXTERNAL BOOSTER CONTROL 1/2" CONDUIT HOLE. (BSTR1 & BSTR2) 0.1 AMPS @ 120 VAC

P1 COMMON WATER CONNECTION: (W/O ELECTRIC BOOSTER) (180°F COMMON WATER CONNECTION: (W/O ELECTRIC BOOSTER) (120°F WATER MIN. CHEMICAL SANITIZING) 3/4" FPT.

P2 COMMON WATER CONNECTION: (W/ELECTRIC BOOSTER) (110°F WATER MIN. HOT WATER SANITIZING); 3/4" FPT.

P3 DRAIN: 1-1/2" MPT.

P4 DETERGENT PROBE SENSOR: REMOVE CAP AND STUD ASSEMBLY TO ACCESS 7/8" HOLE.

P5 DETERGENT FEEDER: REMOVE CAP PLUG TO ACCESS 7/8" HOLE.

P6 RINSE AGENT FEEDER: 1/8" NPT, REMOVE 1/8" NPT PIPE PLUG TO ACCESS TAPPED HOLE.

P7 SANITIZER FEEDER: (LOW TEMP MODE) 1/8" NPT, REMOVE 1/8" NPT PIPE PLUG TO ACCESS TAPPED HOLE.

AM-15T WITH ELECTRIC HEAT			
ELEC. SPECS.	RATED AMPS	MINIMUM SUPPLY CIRCUIT CONDUCTOR AMPACITY	MAXIMUM OVERCURRENT PROTECTIVE DEVICE
208-240/60/1	43.0	50	50
208-240/60/3	24.9	30	30
480/60/3	13.4	15	15
*200-240/50/3	25.2	35	35
*380-415/50/3	12.5	15	15

MACHINE ELECTRICAL SPECIFICATIONS

208-240/60/1

208-240/60/3

480/60/3

* 200-240/50/3
* 380-415/50/3
* THESE ELECTRICAL SPECIFICATIONS ARE NOT SUBMITTTED FOR UL OR CUL LISTING

BOOSTER AMPACITY RATINGS 8.5KW (NOT AVAILABLE WITH GAS HEAT)			
ELEC. SPECS.	RATED AMPS.	MINIMUM SUPPLY CIRCUIT CONDUCTOR AMPACITY	MAXIMUM OVERCURRENT PROTECTIVE DEVICE
208-240/60/1	35.4	50	50
208-240/60/3	20.4	30	30
480/60/3	10.2	15	15
*200-240/50/3	20.4	30	30
*380-415/50/3	11.8	15	15

BOOSTER ELECTRICAL SPECIFICATIONS

208-240/60/1
208-240/60/3
480/60/3

* 200-240/50/3
* 380-415/50/3
* THESE ELECTRICAL SPECIFICATIONS ARE NOT SUBMITTED FOR UL OR CUL LISTING

MODEL:
AM-15T W/ELECTRIC HEAT
00-893960
REV. A

AM SELECT TALL DISHWASHER – GAS

HOBART
701 S Ridge Avenue, Troy, OH 45374
1-888-4HOBART • www.hobartcorp.com

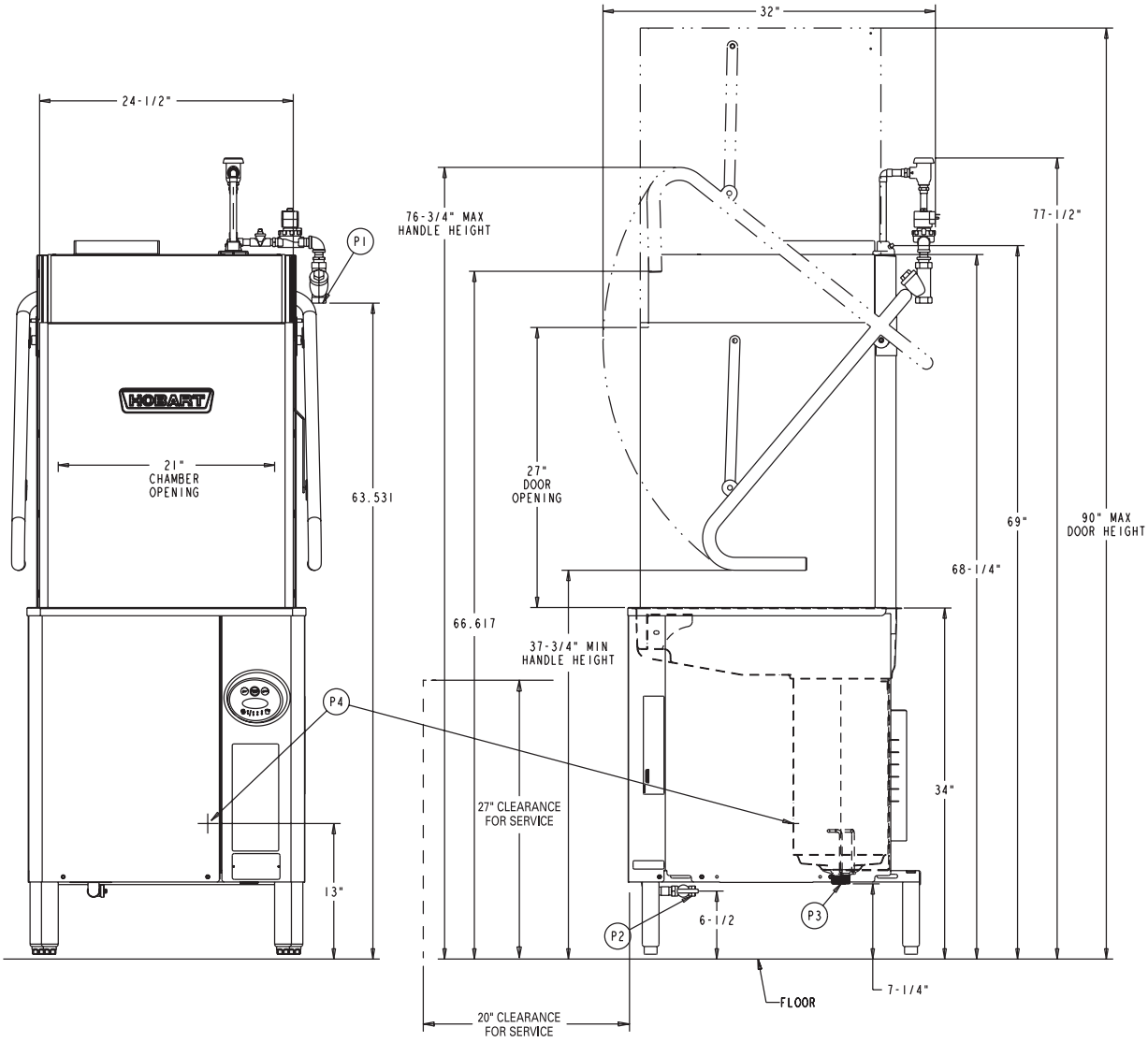

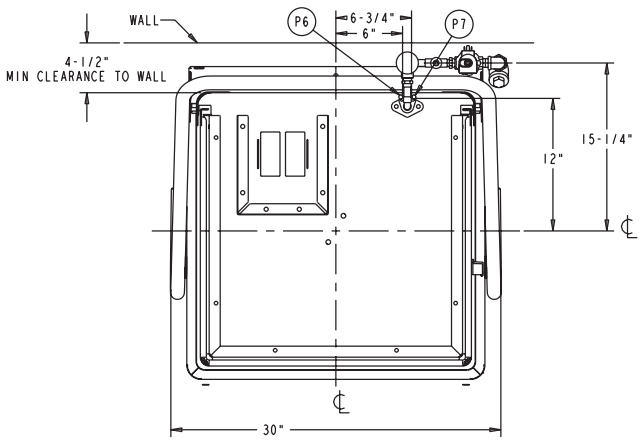

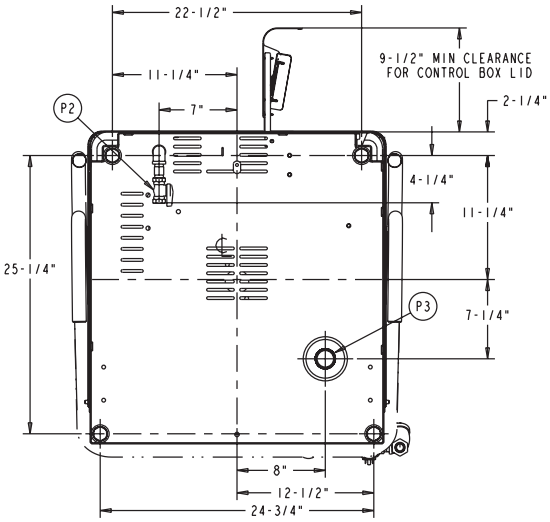

HOBART
701 S Ridge Avenue, Troy, OH 45374
1-888-4HOBART • www.hobartcorp.com

AM SELECT TALL DISHWASHER – GAS

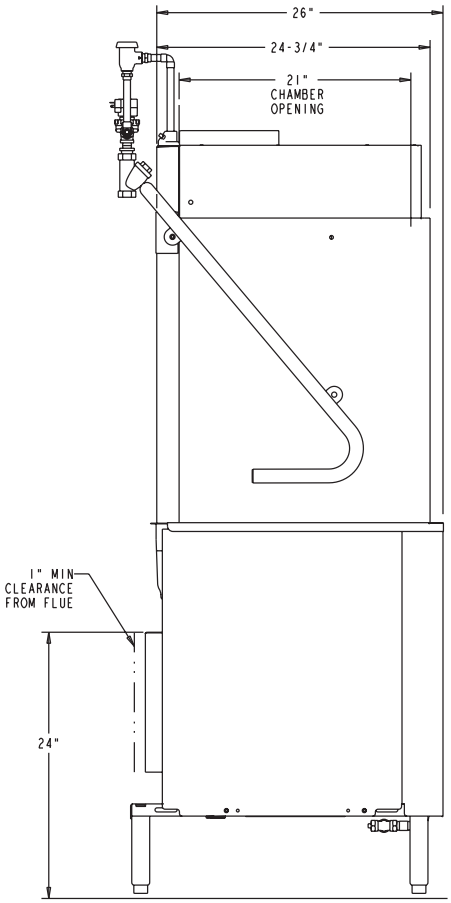

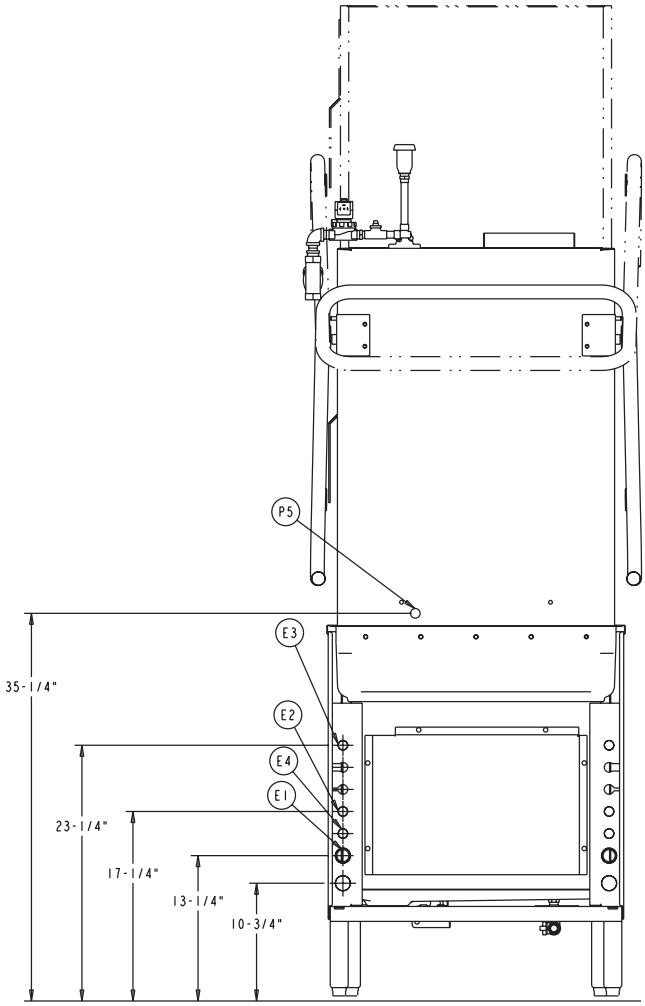

CONNECTION INFORMATION
(•AFF - ABOVE FINISHED FLOOR)

WARNING

ELECTRICAL AND GROUNDING CONNECTIONS MUST COMPLY WITH THE APPLICABLE PORTIONS OF THE NATIONAL ELECTRICAL CODE AND/OR OTHER LOCAL ELECTRICAL CODES.

PLUMBING CONNECTIONS MUST COMPLY WITH APPLICABLE SANITARY, SAFETY, AND PLUMBING CODES.

AM-15T WITH GAS HEAT			
ELEC. SPECS.	RATED AMPS	MINIMUM SUPPLY CIRCUIT CONDUCTOR AMPACITY	MAXIMUM OVERCURRENT PROTECTIVE DEVICE
208-240/60/1	15.5	20	20
208-240/60/3	10	15	15
480/60/3	6.3	15	15

MACHINE ELECTRICAL SPECIFICATIONS

208-240/60/1

208-240/60/3

480/60/3

LEGEND *(see page 6 for further details)*

E1 ELECTRICAL CONNECTION: MOTORS & CONTROLS. 1" OR 3/4" CONDUIT HOLE.

E2 ELECTRICAL CONNECTION: VENT FAN CONTROL, 1/2" CONDUIT HOLE. (VFC1 & VFC2) 1.5 AMPS @ NAMEPLATE SUPPLY VOLTAGE, "ON" WHEN MACHINE IS ON.

E3 ELECTRICAL CONNECTION: RINSE AGENT & SANITIZER FEEDERS, 1/2" CONDUIT HOLE. (DPS1 & DPS2) 1.5 AMPS @ NAMEPLATE SUPPLY VOLTAGE, (RPS1 & RPS2) 1.5 AMPS @ NAMEPLATE SUPPLY VOLTAGE.

E4 ELECTRICAL CONNECTION: EXTERNAL BOOSTER CONTROL, 1/2" CONDUIT HOLE. (BSTR1 & BSTR2) 0.1 AMPS @ 120 VAC

P1 COMMON WATER CONNECTION:
(180°F WATER MIN. HOT WATER SANITIZING)
(120°F WATER MIN. CHEMICAL SANITIZING)
3/4" FPT.

P2 GAS CONNECTION - NAT. OR L.P. (WHEN ORDERED): 1/2" FPT.

P3 DRAIN: 1-1/2" MPT.

P4 DETERGENT PROBE SENSOR: REMOVE CAP AND STUD ASSEMBLY TO ACCESS 7/8" HOLE.

P5 DETERGENT FEEDER: REMOVE CAP PLUG TO ACCESS 7/8" HOLE.

P6 RINSE AGENT FEEDER: 1/8" NPT, REMOVE 1/8" NPT PIPE PLUG TO ACCESS TAPPED HOLE.

P7 SANITIZER FEEDER: 1/8" NPT, REMOVE 1/8" NPT PIPE PLUG TO ACCESS TAPPED HOLE.

MODEL:
AM-15T W/GAS HEAT
00-893960
REV. A

AM SELECT TALL DISHWASHER

HOBART
701 S Ridge Avenue, Troy, OH 45374
1-888-4HOBART • www.hobartcorp.com

ELECTRIC TANK HEAT

PLUMBING NOTES:

WATER HAMMER ARRESTOR (MEETING ASSE-1010 STANDARD OR EQUIVALENT) TO BE SUPPLIED (BY OTHERS) IN COMMON WATER SUPPLY LINE AT SERVICE CONNECTION.

RECOMMENDED WATER HARDNESS TO BE 4-6 GRAINS FOR BEST RESULTS.

RECOMMENDED BUILDING FLOWING WATER PRESSURE TO THE DISHWASHER IS 15-25 PSI. IF PRESSURES HIGHER THAN 25 PSI ARE PRESENT, A PRESSURE REGULATING VALVE WITH INTERNAL THERMAL EXPANSION BY PASS, MUST BE SUPPLIED (BY OTHERS) IN THE WATER LINE TO THE DISHWASHER.

FOR CONVENIENCE WHEN CLEANING, WATER TAP SHOULD BE INSTALLED NEAR MACHINE WITH HEAVY DUTY HOSE AND SQUEEZE VALVE.

MISCELLANEOUS NOTES:

ALL DIMENSIONS TAKEN FROM FLOOR LINE MAY INCREASE 3/4" OR DECREASE 1/2" DEPENDING ON LEG ADJUSTMENT.

NET WEIGHT OF MACHINE: 299 LBS. W/O BOOSTER
DOMESTIC SHIPPING WEIGHT: 388 LBS. W/O BOOSTER

NET WEIGHT OF MACHINE: 329 LBS. W/BOOSTER
DOMESTIC SHIPPING WEIGHT: 418 LBS. W/BOOSTER

SIZE OF RACKS - 19-3/4" X 19-3/4"

DRAIN LEVER LOCATED INSIDE TANK.

VENT HOOD (IF REQUIRED) TO PROVIDE A MINIMUM 450 CFM EXHAUST (REF INSTALLATION INSTRUCTIONS).

DO NOT CONNECT EXHAUST DUCT TO VENT OPENING ON TOP OF MACHINE

SINGLE POINT ELECTRICAL CONNECTION AVAILABLE ON 3 PH MACHINES ONLY WITH INTEGRATED BOOSTER HEATER

OPTIONAL AM SELECT SINGLE POINT ELECTRICAL SERVICE CONNECTION AS SHOWN BELOW			
ELEC. SPECS	RATED AMPS	MINIMUM SUPPLY CONDUCTOR AMPACITY	MAXIMUM PROTECTIVE DEVICE
208-240/60/3	45.4	60	60
480/60/3	23.7	30	30
*200-240/50/3	45.4	60	60
*380-415/50/3	25.2	30	30

GAS TANK HEAT

GAS HEATED DISHWASHERS

FOR NATURAL GAS, PRESSURE TO THE BURNER (CUSTOMER CONNECTION) SHOULD NOT EXCEED 7" W.C.

FOR LIQUIFIED PETROLEUM GAS, PRESSURE TO THE BURNER (CUSTOMER CONNECTION) SHOULD NOT EXCEED 11" W.C.

IF GAS PRESSURE IS HIGHER THAN 7"(NATURAL GAS) OR 11"(L.P.) W.C., A PRESSURE REGULATING VALVE MUST BE INSTALLED(BY OTHERS) IN THE GAS LINE TO THE DISHWASHER.

GAS HEAT BTU INPUT - 25,000 NATURAL
25,000 PROPANE

PLUMBING NOTES:

WATER HAMMER ARRESTOR (MEETING ASSE-1010 STANDARD OR EQUIVALENT) TO BE SUPPLIED (BY OTHERS) IN COMMON WATER SUPPLY LINE AT SERVICE CONNECTION.

RECOMMENDED WATER HARDNESS TO BE 4-6 GRAINS FOR BEST RESULTS.

RECOMMENDED BUILDING FLOWING WATER PRESSURE TO THE DISHWASHER IS 15-25 PSI. IF PRESSURES HIGHER THAN 25 PSI ARE PRESENT, A PRESSURE REGULATING VALVE WITH INTERNAL THERMAL EXPANSION BY PASS, MUST BE SUPPLIED (BY OTHERS) IN THE WATER LINE TO THE DISHWASHER.

FOR CONVENIENCE WHEN CLEANING, WATER TAP SHOULD BE INSTALLED NEAR MACHINE WITH HEAVY DUTY HOSE AND SQUEEZE VALVE.

MISCELLANEOUS NOTES:

ALL DIMENSIONS TAKEN FROM FLOOR LINE MAY INCREASE 3/4" OR DECREASE 1/2" DEPENDING ON LEG ADJUSTMENT.

NET WEIGHT OF MACHINE: 331 LBS.
DOMESTIC SHIPPING WEIGHT: 420 LBS.

SIZE OF RACKS - 19-3/4" X 19-3/4"

DRAIN LEVER LOCATED INSIDE TANK.

VENT HOOD (IF REQUIRED) TO PROVIDE A MINIMUM 450 CFM EXHAUST (REF INSTALLATION INSTRUCTIONS).

	AM Select Tall	
	Hot Water Sanitizing	**Chemical Sanitizing**
Machine Ratings (Mechanical) Racks per Hour (Max.)	58	65
Dishes per Hour (Average 25 per rack)	1,459	1,625
Glasses per Hour (Average 45 per rack)	2,610	2,925
Table to Table - Inside Tank at Table Connection (Inches)	25¼"	25¼"
Overall Dimensions - (H x W x D) (Inches)	77.5" x 27" x 28.5"	
Wash Motor H.P.	2	2
Wash Tank Capacity - Gallons	14	14
Wash Pump Capacity - Gallons per Minute - Weir Test	160	160
Heating Equipment - (For keeping power wash water hot) Gas Burner (Regulated) Natural/LP Gas BTU/Hr.	25,000	25,000
Electric Heating Unit (Regulated)	5 kw	5 kw
Rinse - Minutes operated during hour of capacity operation	9.66	10.83
Seconds of rinse per rack	10	10
Rate of Rinse Flow - Gallons per Minute - at 20 lbs. Flow Pressure	4.4	4.4
Rinse Consumption - Gallons per Hour - **Maximum -** at 20 lbs. Flow Pressure	42.9	48.1
Rinse Cycle - Gallons per Rack - at 20 PSI Flow	.74 - 180°F Min.	.74 - 140°F Min.
Steam Booster, if used based on 20 PSI steam - 20 PSI water flowing 130°F entering water raised to 180°F min. (50°F rise) - Lbs. per Hour	40	40
Peak Rate of Drain Flow - Gallons per Minute (Initial rate with full tank)	14	14
Exhaust Requirements	450	450
Shipping Weight Crated - Approx. lbs. - Unit only, with booster	388 w/o Booster 418 w/Booster	388

HOBART
701 S Ridge Avenue, Troy, OH 45374
1-888-4HOBART • www.hobartcorp.com

AM SELECT TALL DISHWASHER

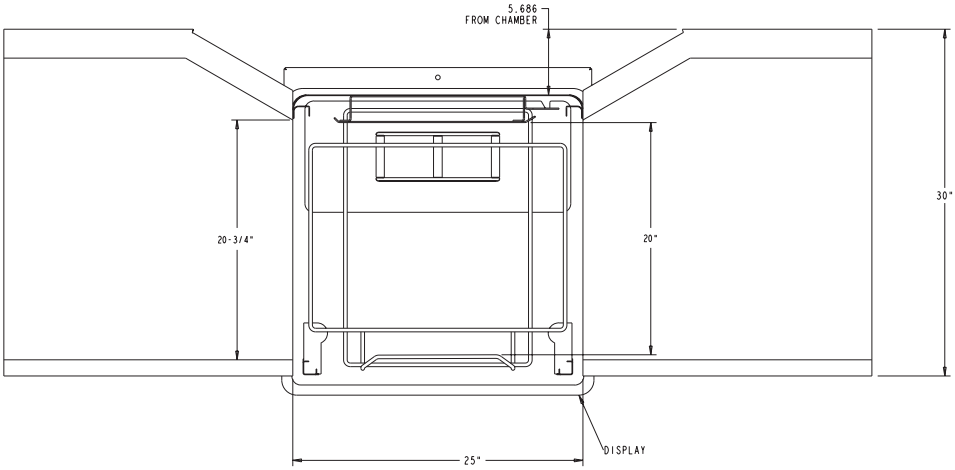

PASS THRU INSTALLATION

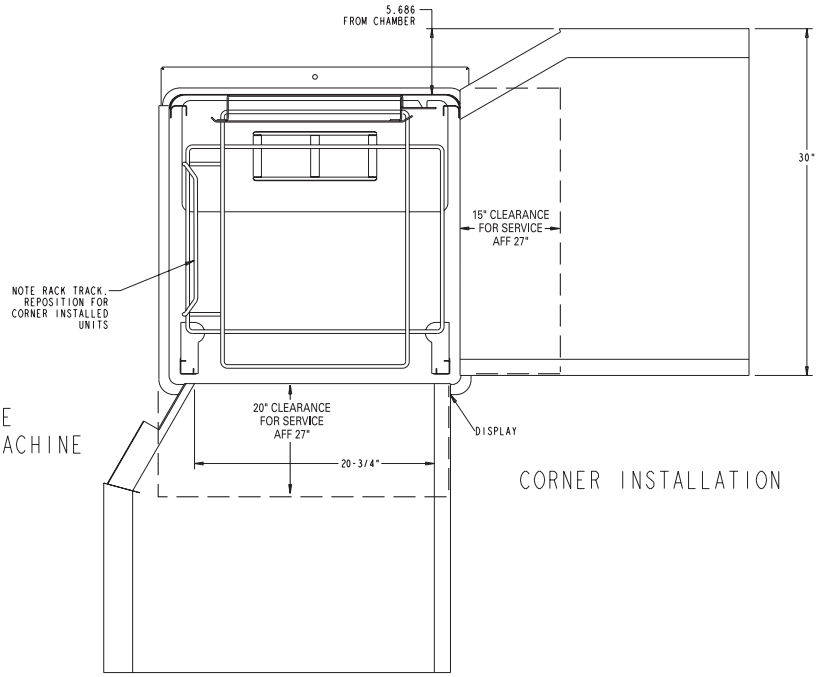

TOP INSIDE VIEW OF MACHINE

CORNER INSTALLATION

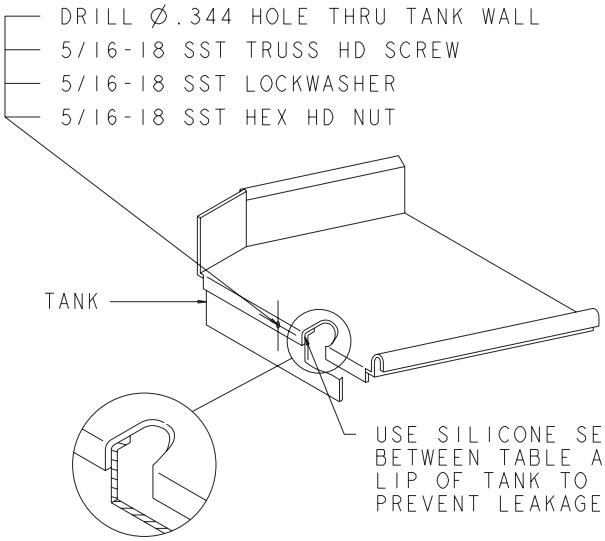

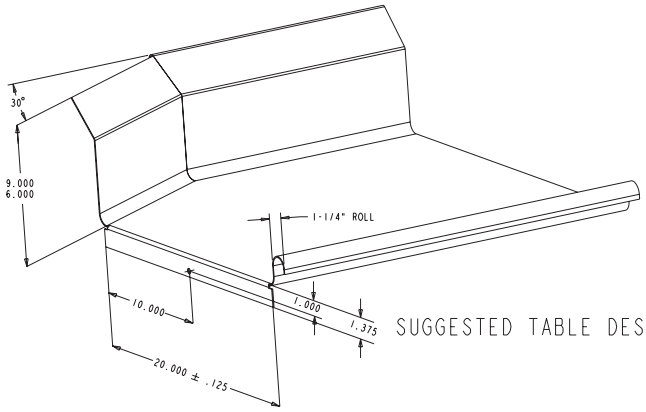

SUGGESTED TABLE DESIGN

AM SELECT TALL DISHWASHER

HOBART
701 S Ridge Avenue, Troy, OH 45374
1-888-4HOBART • www.hobartcorp.com

The microcomputer-based control system is built into the AM Select dishwasher. It is available in standard electrical specifications of 208-240/60/1, 208-240/60/3, 480/60/3, 200-240/50/3, 380-415/50/3 and is equipped with a reduced voltage pilot circuit transformer.

***CAUTION: CERTAIN MATERIALS, INCLUDING SILVER, ALUMINUM AND PEWTER ARE ATTACKED BY SODIUM HYPOCHLORITE (LIQUID BLEACH) IN THE CHEMICAL SANITIZING DISHWASHER MODE OF OPERATION. WATER HARDNESS MUST BE CONTROLLED TO 4-6 GRAINS FOR BEST RESULTS.**

CONSTRUCTION: Drawn tank, tank shelf and feet constructed of 16 gauge stainless steel. Wash chamber and front trim panel above motor compartment are polished, satin finish. Frame is 12 gauge stainless steel, chamber is 18 gauge, and removable trim panels are 20 gauge.

CHAMBER: Stainless steel chamber with large 20¾" W x 27" H opening will accommodate 18" x 26" sheet pans or a 60-quart mixing bowl.

CHAMBER LIFT: Chamber coupled by stainless steel handle, spring counterbalanced. Chamber guided for ease of operation and long life.

PUMP: With stainless steel pump and impeller, integral with motor assures alignment and quiet operation. Pump shaft seal with stainless steel parts and a carbon ceramic sealing interface. Easily removable impeller housing permits ease of inspection. Capacity 160 GPM. Pump is completely self-draining.

MOTOR: Built for Hobart, 2 H.P., with inherent thermal protection, grease-packed ball bearings, splash-proof design, ventilated. Single-phase is capacitor-start, induction-run type. Three-phase is squirrel-cage, induction type.

MICROCOMPUTER CONTROL SYSTEM: Hobart micro-computer controls, assembled within water-resistant enclosure, provide built-in performance and reliability.

The microcomputer control, relays and contactors are housed behind a stainless steel enclosure, hinged to provide easy access for servicing. The line voltage electrical components are completely wired with 105°C, 600V thermoplastic insulated wire with stranded conductors and routed through listed electrical conduit. Electrical components are wired with type ST cord. Line disconnect switch NOT furnished.

CYCLE OPERATION: The microcomputer-timing program is started by closing the doors, which actuates the door cycle switch. The microcomputer energizes the wash pump motor contactor during the wash portion of the program. After the wash, a dwell permits the upper wash manifold to drain. At the end of the dwell, the final rinse solenoid valve is energized. After the final rinse valve closes, Sani-Dwell (Hot Water Mode only) permits sanitization to continue. The Rinse display remains on during this period, completing the program. If the micro-computer is interrupted during a cycle by the door-cycle switch, the microcomputer is reset to the beginning of the program. **Hot Water Sanitizing (58 racks per hour) – 57 seconds:** 38 Second Wash, 2 Second Dwell, 10 Second Rinse, 7 Second Sani-Dwell. **Chemical Sanitizing (65 racks per hour) – 50 Seconds:** 38 Second Wash, 2 Second Dwell, 10 Second Rinse. Other programs can be pre-selected by your Hobart service technician.

Manual wash cycle selector also provides selection of 2-, 4- or 6-minute wash cycles for heavier washing applications.

WASH: Hobart revolving stainless steel wash arms with unrestricted openings above and below provide thorough distribution of water jets to all dishware surfaces. Arms are easily removable for cleaning and are interchangeable. Stainless steel tubing manifold connects upper and lower spray system.

RINSE: Rotating rinse arms, both upper and lower, feature 14 rinse nozzles. The stainless steel upper and lower rinse arms are easily removable without tools for inspection and are interchangeable. Diaphragm-type rinse control solenoid valve mounted outside machine. Machine is equipped with special hot water vacuum breaker on downstream side of rinse valve – mounted 6" above uppermost rinse opening. Easy open brass line strainer furnished.

FILL: Microcomputer controlled fill valve installed on upstream side of rinse vacuum breaker. Ratio fill method is used giving the correct fill at any flowing water pressure. (20 PSIG minimum necessary for proper rinsing.)

DRAIN AND OVERFLOW: Large bell type automatic overflow and drain valve controlled from inside of machine. Drain automatically closed by lowering chamber. Drain seal is large diameter, high temperature “O” ring. Cover for overflow is integral part of the stand pipe.

STRAINER SYSTEM: Equipped with large, exclusive self-flushing, easily removable perforated stainless steel, one-piece strainer and large capacity scrap basket. Submerged scrap basket minimizes frequent removal and cleaning.

HEATING EQUIPMENT: Standard tank heat is 5KW electric immersion heating element. Regulated power infrared gas immersion tube system is optional at extra cost. A solid-state igniter board controls the gas valve and provides flame ignition. A transformer steps the control circuit voltage down to 24 volts to power the igniter board and gas valves.

Gas Heated Dishwasher: For natural gas, gas pressure (customer connection) not to exceed 7" W.C. For liquefied petroleum, gas pressure to burner (customer connection) not to exceed 11" W.C. If gas pressure is higher than 7" W.C. natural or 11" W.C. LP, a pressure regulating valve must be supplied (by others) in the gas line to the dishwasher. Water temperature regulation is controlled by thermistor sensor in combination with microcomputer controls. The tank heat and positive low water protection microcomputer circuits are automatically activated when the main power switch is turned “on”. If tank is accidentally drained, low water protection device automatically turns heat off. Gas immersion tube is additionally protected by a high limit device mounted on the surface of the tube. These features are standard with the Hobart Microcomputer Control System.

OPTIONAL EQUIPMENT AT EXTRA COST – ELECTRIC BOOSTER HEATER: Electric booster with Sense-A-Temp™ technology adequately sized to raise 110°F inlet water to 180°F (not available on gas heat machines).

ACCESSORIES: 19¾" x 19¾" peg and combination dish racks. Sheet pan rack. Splash shield for corner installations. End of cycle audible alarm (field activated). Delime notification (field activated). Desirable functional accessories can be furnished at added cost. See listed options and accessories on this specification sheet. Write to the factory for special requirements not listed above.

As continued product improvement is a policy of Hobart, specifications are subject to change without notice.

RJS | BARBER ASSOCIATES

RJS | Barber Associates

Integrated Food Service Design

9/6/2013

ITEM# 6A - CONDENSATE HOOD (1 REQ'D)

Halton Co. CH

Type II Hood 1 Hood Length (In): 48 Inches
Hood Width (In): 48 Inches
Hood Height (In): 24 Inches
Hood Material: All 300 Stainless
Mesh Filter Option for CH: Yes
Switch Plate: Yes
Ceiling Closure Height (In): 18
Ceiling Closure Length (In): 144 (conduit by others) NO FAN

RJS | BARBER ASSOCIATES

RJS | Barber Associates

Integrated Food Service Design

9/6/2013

ITEM# 7 - SOILED DISHTABLE (1 REQ'D)

Custom Fab CUSTOM

Straight-Soil Dishtable, right-to-left, 10-1/2" backsplash, with pre-rinse sink, stainless steel legs, with crossrails, 102" long, 14/304 stainless steel. Scrap Trough, welded to table to extend to trough collector.

WATER

	HOT SIZE	HOT AFF	HOT GPH	COLD SIZE	COLD AFF	FILTERED SIZE	FILTERED AFF	CONDENSER INLET SIZE	CONDENSER OUTLET SIZE
1									

WASTE

	INDIRECT SIZE	DIRECT SIZE
1	1-1/2"	

RJS | BARBER ASSOCIATES

RJS | Barber Associates

Integrated Food Service Design

9/6/2013

ITEM# 7A - PRE-RINSE (1 REQ'D)

Fisher 53473

Pre-Rinse Unit, spring, 8" adjustable wall mount, Add-On-Faucet with 12" swing spout, stainless steel

WATER

	HOT SIZE	HOT AFF	HOT GPH	COLD SIZE	COLD AFF	FILTERED SIZE	FILTERED AFF	CONDENSER INLET SIZE	CONDENSER OUTLET SIZE
1	1/2"			1/2"					

WASTE

	INDIRECT SIZE	DIRECT SIZE
1		

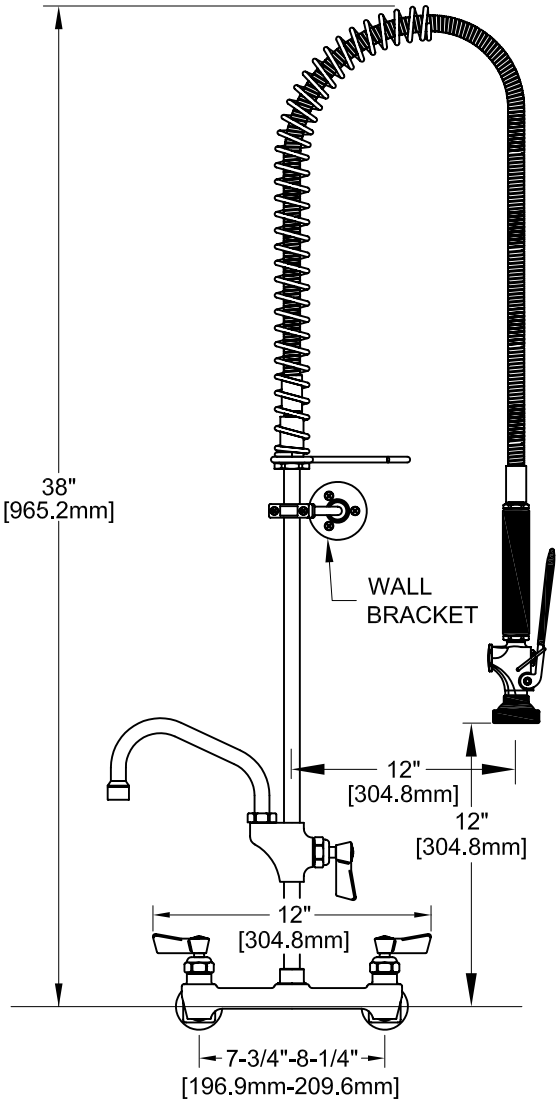

7-1/2" - 8-1/2" ADJ. WALL

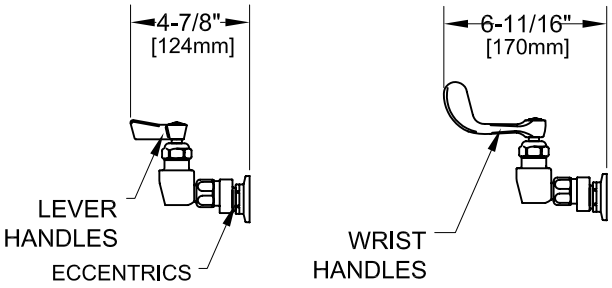

ROUGH-IN:

ADJ. WALL

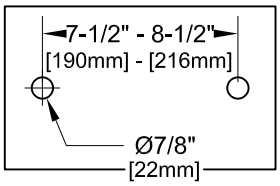

ANSI/A112.18.1-2005

PRODUCT NAME: STAINLESS STEEL
8" ADJ. WALL PRE-RINSE WITH ADD-ON

SPEC. 53449

MODEL:

- ☐ 53449 6" SWING SPOUT W/ LEVER HANDLES
- ☐ 53457 8" SWING SPOUT W/ LEVER HANDLES
- ☐ 53465 10" SWING SPOUT W/ LEVER HANDLES
- ☐ 53473 12" SWING SPOUT W/ LEVER HANDLES
- ☐ 54631 14" SWING SPOUT W/ LEVER HANDLES
- ☐ 53503 16" SWING SPOUT W/ LEVER HANDLES
- ☐ 74020 6" SWING SPOUT W/ WRIST HANDLES
- ☐ 74039 8" SWING SPOUT W/ WRIST HANDLES
- ☐ 74047 10" SWING SPOUT W/ WRIST HANDLES
- ☐ 74055 12" SWING SPOUT W/ WRIST HANDLES
- ☐ 74063 14" SWING SPOUT W/ WRIST HANDLES
- ☐ 74071 16" SWING SPOUT W/ WRIST HANDLES

FEATURES:

MAIN CONTROL VALVE
* WALL MOUNT
* ECCENTRICS ADJUST FROM 7-1/2" TO 8-1/2"
* INTERNAL SPRING LOADED CHECK VALVES
* SWIVELLING SEAT DISKS
* HOT SIDE STEM - RIGHT HAND CHECK
* COLD SIDE STEM - LEFT HAND CHECK
* STAINLESS STEEL SEATS, SEAT SCREWS AND HANDLE SCREWS

ADD-ON CONTROL VALVE
* STEM - RIGHT HAND SWIVEL
* HOT INDEX BUTTON
* SWIVELLING SEAT DISKS
* STAINLESS STEEL SEATS, SEAT SCREWS AND HANDLE SCREWS.

HOSE
* 36" LENGTH
* STAINLESS STEEL END FITTINGS
* STAINLESS STEEL EXTERNAL JACKET
* 3-PLY FIBER REINFORCED INTERNAL RUBBER HOSE
* REPAIRABLE IN FIELD WITH SIMPLE TOOLS

ULTRA SPRAY VALVE
* LOWEST ENERGY USER - 1.15 GPM @ 60 PSI
* CLEANS FASTER - TEST PROVEN
* ENGINEERED TO LAST - NO 'O' RINGS TO LEAK
* INTERCHANGEABLE - FITS ALL BRANDS

WALL BRACKET
* ADJUSTS FROM 2" TO 12"

SYSTEM LIMITS
* TEMP: 40°F MIN. TO 140°F MAX. STATIC
* PRESSURE 200 PSI MAX. STATIC
* SHIPPING WEIGHT: 15.0 LBS

* NSF 61-9 APPROVED & LISTED
www.truesdail.com

FISHER
FISHER MANUFACTURING COMPANY
TOLL FREE: 800-421-6162 - FAX: 800-832-8238
information@fisher-mfg.com - www.fisher-mfg.com

RJS | BARBER ASSOCIATES

RJS | Barber Associates

Integrated Food Service Design

9/6/2013

ITEM# 7B - WASTE COLLECTOR (1 REQ'D)

Salvajor S419

Trough Collector, trough conveyor & collecting system (widely accepted in areas where disposers are restricted), with trough diffuser, salvage basin & silverware trap, 3/4 HP corrosion-resistant pump, stainless steel construction, start/stop pushbutton control panel, with safety line disconnect & automatic shut off timer

ACCESSORIES

Mfr	Qty	Model	Spec
Salvajor	1		208v/60hz/3-ph, 3.2 amps
Salvajor	1	992013	Scrap basket
Salvajor	1	988001	Gusher head assembly for TVL, TVR & S419
Salvajor	1	1219	Trough Collector rack guide

ELECTRICAL

	VOLTS	CYCLE	PHASE	CONN	AFF	NEMA	AMPS	KW	HP	MCA	MOCP
1	208	60	3	Direct			3.2	1.153	3/4		

WATER

	HOT SIZE	HOT AFF	HOT GPH	COLD SIZE	COLD AFF	FILTERED SIZE	FILTERED AFF	CONDENSER INLET SIZE	CONDENSER OUTLET SIZE
1	1/2"			1/2"					

WASTE

	INDIRECT SIZE	DIRECT SIZE
1		2"

PLUMBING 1 REMARKS

3⁄4" hot and cold water supply and reduce to 1⁄2" at connection.

Trough Collector

Salvajor®

Job: _____ **Item No.:** _____

Model S419

A Trough Conveying and Food Waste Collecting System

Widely accepted in areas that restrict the use of food waste disposers.

Recirculated Water used for scrapping typically reduces water and sewer costs dramatically. The Trough Collector consumes only 2 gallons of new water per minute.

Trough Water Velocity with the Trough Collector is 70 gallons per minute. This velocity swiftly propels food waste down the trough and into the Collector with no additional hand movement, leaving both hands free for high-volume scrapping. The Trough Collector will let you keep up with large conveyor or flight dishmachines.

Design Flexibility is offered by the Collector as troughs can turn one or more corners and have wider troughs for soaking problem dishes.

Wider and Longer Troughs can be designed because of the Collectors high water velocity which allows you to soak problem dishes or add gusher heads to pre-rinse compartmental trays.

T Y P I C A L I N S T A L L A T I O N S

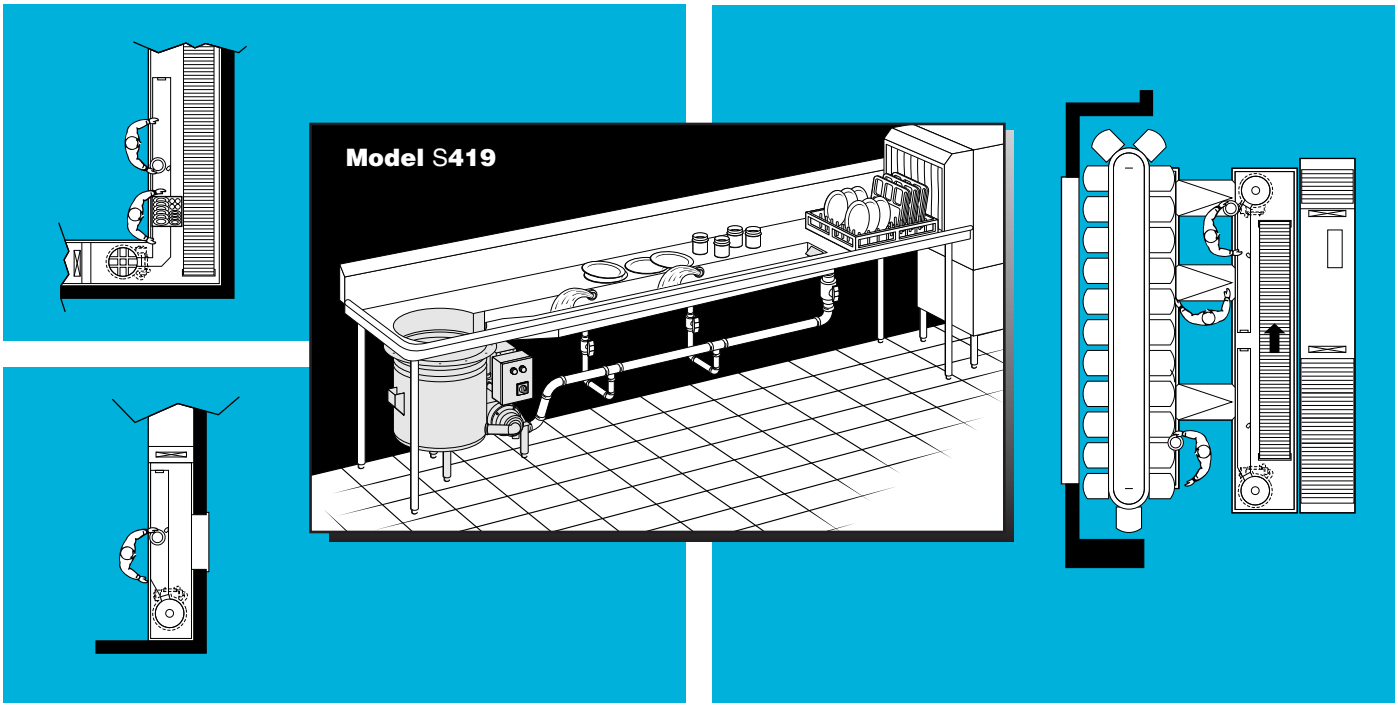

Trough Collector Model S419

Trough Collector Legend

- **A** Tank drain 2” NPT
- **B** 1/2” conduit knockout electrical connection
- **C** Hot/cold shutoff valves 1/2” NPT
- **D** Removable Top

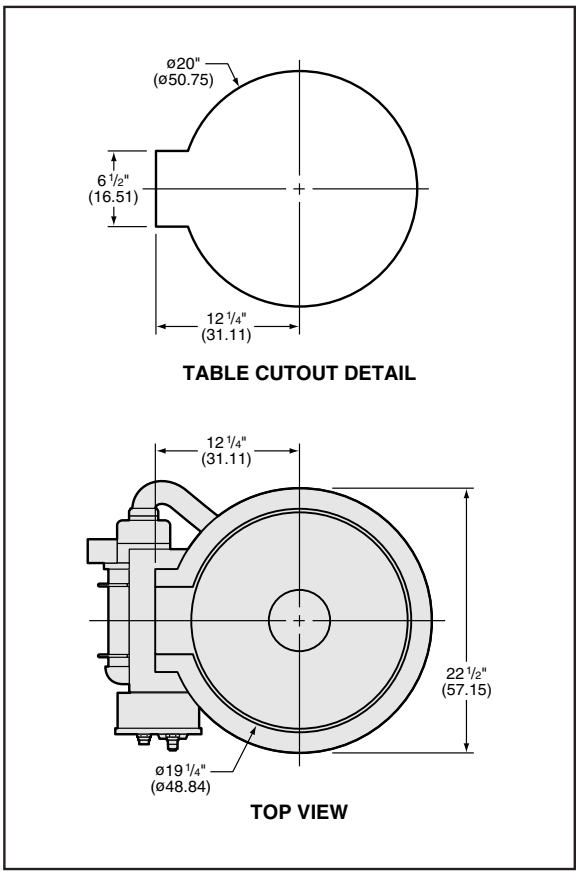

DETAIL "C" RECIRCULATION PLUMBING

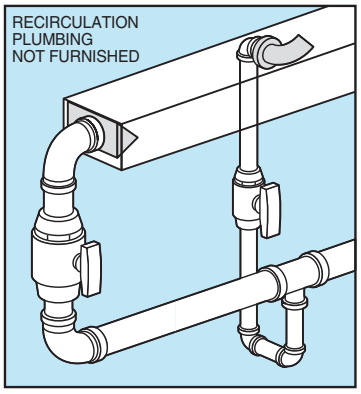

Note: Add 6” from back of trough to wall for recirculation piping.

DETAIL "A" – WATER DIFFUSER

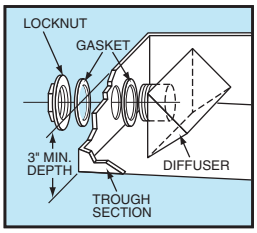

DETAIL "B"–TROUGH CONNECTION FLANGE

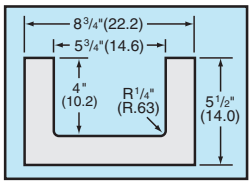

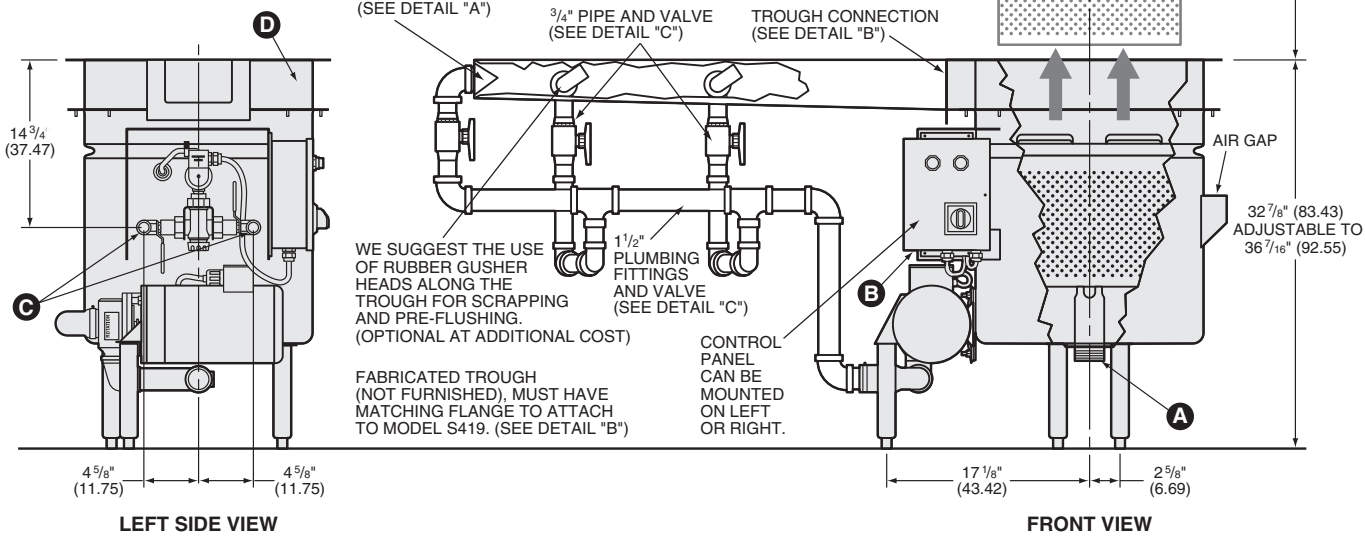

Trough Collector Model S419

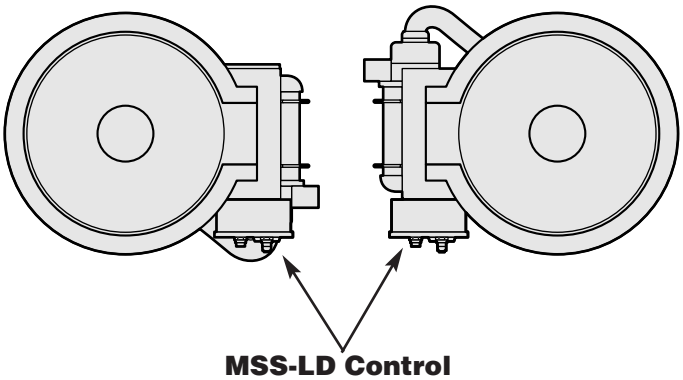

MSS-LD Control

The MSS-LD control can be mounted on either side of the Collector with existing fasteners, mounting holes and wiring for left or right hand operation.

#980104

MSS-LD Mounting Bracket

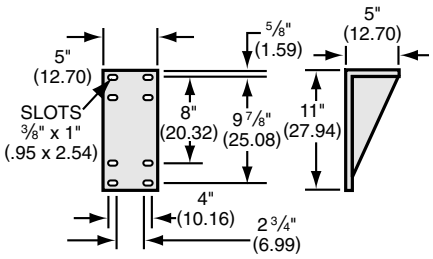

The control can be mounted remotely using optional mounting bracket.

Note: additional field wiring is necessary.

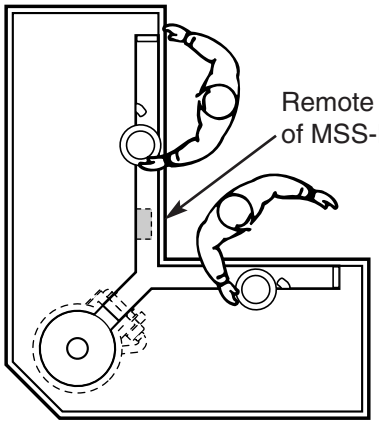

Upon request, the Collector top may be shipped separately to an alternate location for fabrication.

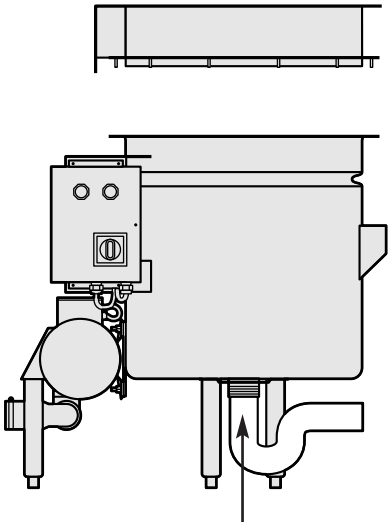

2" TANK DRAIN
(Piping not furnished)

ALL CONNECTIONS ARE TO BE MADE BY QUALIFIED PERSONNEL WHO WILL OBSERVE ALL LOCAL AND NATIONAL CODES.

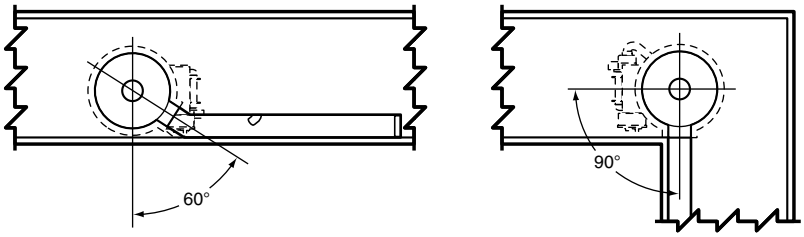

The Trough Collector top can be rotated in 15 degree increments to ease common installations as well as improve design flexability without the need of costly tank modifications.

NOTE: Dimensions in parenthesis are in centimeters

Salvajor Trough Collector

MODEL S419

S P E C I F I C A T I O N S

CONSTRUCTION

- Tank - 2 Piece Stainless Steel
- Adjustable Legs - Stainless Steel
- Control Panel - Stainless Steel
- Salvage Basin - High Impact Polymer
- Scrap Basket - High Impact Polymer

ELECTRICAL

- Pre-wired NEMA 4 Control Panel
- Watertight Conduit/Fittings
- Separate Component Grounding
- Thermally Protected Motor
- Safety Line Disconnect

PLUMBING

- Corrosion Resistant Components
- Automatic Water Blender
- Solenoid Valve
- Unions
- Check Valves
- Incoming Water Valves
- Non-clogging Pump Design
- Backflow Prevention Device

ACCESSORIES

- ☐ Remote Start-Stop
- ☐ Remote Mounting Bracket
- ☐ Correctional Package
- ☐ MSS-LD Mounting Bracket
- ☐ Additional Scrap Basket

VOLTAGES AVAILABLE

(SPECIFY EXACT OPERATING VOLTAGE)

☐ 115V ☐ 208V ☐ 230V, 60 Cycle, 1 Phase

☐ 208V ☐ 230V ☐ 460V, 60 Cycle, 3 Phase

Pump Motor 3/4 HP

FULL LOAD AMPS

(SPECIFY EXACT OPERATING VOLTAGE)

1 PHASE			3 PHASE		
115V	208V	230V	208V	230V	460V
11	5.5	5.5	3.2	3	1.5

UTILITIES REQUIRED

1. Electric service
2. 3/4" hot and cold water supply and reduce to 1/2" at connection.
3. 2" tank drain.

(Specifications subject to change without notice.)

SAMPLE SPECIFICATIONS

Unit shall be a Salvajor Trough Collector, a complete scrapping, pre-flushing and food waste collecting system with recirculating water as manufactured by Salvajor.

Model S**419**,____Volts, 60Hz, ___Phase.

Furnished with a pre-wired control panel and stainless steel NEMA 4 watertight enclosure.

The Salvajor Company 4530 East 75th Terrace Kansas City, Missouri 64132-2081, USA
1-800-SALVAJOR (816) 363-1030 FAX: 1-800-832-9373
www.salvajor.com Email: sales@salvajor.com service@salvajor.com

Manufacturers of Commercial Food Waste Disposing Systems since 1944

Printed in USA
Form No S419-9-BH

RJS | BARBER ASSOCIATES

RJS | Barber Associates

Integrated Food Service Design

9/6/2013

ITEM# 8 - THREE (3) COMPARTMENT SINK (1 REQ'D)

Custom Fab CUSTOM

Custom Sink, three compartment, w/left & right-hand drainboards, 24" front-to-back x 18" W compartment, 14" deep, with 11" high splash, s/s open frame base, boxed crossrails, 24" drainboards, s/s bullet feet, 14/304 stainless steel, overall 31" F/B x 109" L/R

ACCESSORIES

Mfr	Qty	Model	Spec
Custom Fab	1	CUSTOM	Drain, lever operated with built in overflow, 2" NPT and 1-1/2" IPS outlet connections
Custom Fab	1	CUSTOM	Support Bracket, for lever drains on sinks

WATER

	HOT SIZE	HOT AFF	HOT GPH	COLD SIZE	COLD AFF	FILTERED SIZE	FILTERED AFF	CONDENSER INLET SIZE	CONDENSER OUTLET SIZE
1									

WASTE

	INDIRECT SIZE	DIRECT SIZE
1	(3) 1-1/2"	

RJS | BARBER ASSOCIATES

RJS | Barber Associates

Integrated Food Service Design

9/6/2013

ITEM# 8A - PRE-RINSE (1 REQ'D)

Fisher 54631

Pre-Rinse Unit, spring, 8" adjustable wall mount, Add-On-Faucet with 14" swing spout, stainless steel

WATER

	HOT SIZE	HOT AFF	HOT GPH	COLD SIZE	COLD AFF	FILTERED SIZE	FILTERED AFF	CONDENSER INLET SIZE	CONDENSER OUTLET SIZE
1	1/2"			1/2"					

WASTE

	INDIRECT SIZE	DIRECT SIZE
1		

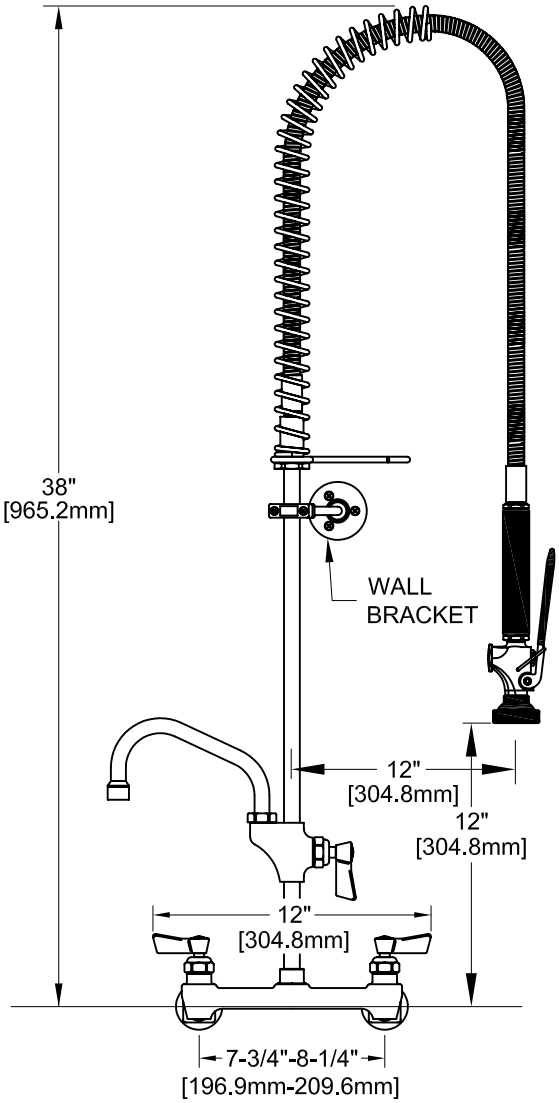

7-1/2" - 8-1/2" ADJ. WALL

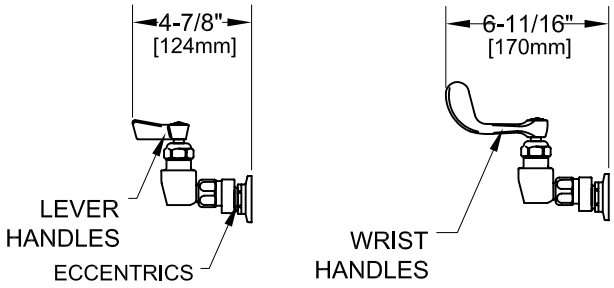

ROUGH-IN:

ADJ. WALL

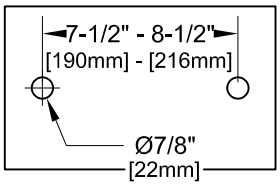

ANSI/A112.18.1-2005

PRODUCT NAME: STAINLESS STEEL
8" ADJ. WALL PRE-RINSE WITH ADD-ON

SPEC. 53449

MODEL:

- ☐ 53449 6" SWING SPOUT W/ LEVER HANDLES
- ☐ 53457 8" SWING SPOUT W/ LEVER HANDLES
- ☐ 53465 10" SWING SPOUT W/ LEVER HANDLES
- ☐ 53473 12" SWING SPOUT W/ LEVER HANDLES
- ☐ 54631 14" SWING SPOUT W/ LEVER HANDLES
- ☐ 53503 16" SWING SPOUT W/ LEVER HANDLES
- ☐ 74020 6" SWING SPOUT W/ WRIST HANDLES
- ☐ 74039 8" SWING SPOUT W/ WRIST HANDLES
- ☐ 74047 10" SWING SPOUT W/ WRIST HANDLES
- ☐ 74055 12" SWING SPOUT W/ WRIST HANDLES
- ☐ 74063 14" SWING SPOUT W/ WRIST HANDLES
- ☐ 74071 16" SWING SPOUT W/ WRIST HANDLES

FEATURES:

MAIN CONTROL VALVE
* WALL MOUNT
* ECCENTRICS ADJUST FROM 7-1/2" TO 8-1/2"
* INTERNAL SPRING LOADED CHECK VALVES
* SWIVELLING SEAT DISKS
* HOT SIDE STEM - RIGHT HAND CHECK
* COLD SIDE STEM - LEFT HAND CHECK
* STAINLESS STEEL SEATS, SEAT SCREWS AND HANDLE SCREWS

ADD-ON CONTROL VALVE
* STEM - RIGHT HAND SWIVEL
* HOT INDEX BUTTON
* SWIVELLING SEAT DISKS
* STAINLESS STEEL SEATS, SEAT SCREWS AND HANDLE SCREWS.

HOSE
* 36" LENGTH
* STAINLESS STEEL END FITTINGS
* STAINLESS STEEL EXTERNAL JACKET
* 3-PLY FIBER REINFORCED INTERNAL RUBBER HOSE
* REPAIRABLE IN FIELD WITH SIMPLE TOOLS

ULTRA SPRAY VALVE
* LOWEST ENERGY USER - 1.15 GPM @ 60 PSI
* CLEANS FASTER - TEST PROVEN
* ENGINEERED TO LAST - NO 'O' RINGS TO LEAK
* INTERCHANGEABLE - FITS ALL BRANDS

WALL BRACKET
* ADJUSTS FROM 2" TO 12"

SYSTEM LIMITS
* TEMP: 40°F MIN. TO 140°F MAX. STATIC
* PRESSURE 200 PSI MAX. STATIC
* SHIPPING WEIGHT: 15.0 LBS

* NSF 61-9 APPROVED & LISTED
www.truesdail.com

FISHER

FISHER MANUFACTURING COMPANY
TOLL FREE: 800-421-6162 - FAX: 800-832-8238
information@fisher-mfg.com - www.fisher-mfg.com

RJS | BARBER ASSOCIATES

RJS | Barber Associates

Integrated Food Service Design

9/6/2013

ITEM# 8B - FAUCET (1 REQ'D)

Fisher 5414

Faucet, splash-mounted, 8" centers, 14" swing spout, 3/4" inlets

WATER

	HOT SIZE	HOT AFF	HOT GPH	COLD SIZE	COLD AFF	FILTERED SIZE	FILTERED AFF	CONDENSER INLET SIZE	CONDENSER OUTLET SIZE
1	3/4"			3/4"					

WASTE

	INDIRECT SIZE	DIRECT SIZE
1		

SPEC. 5412 REV. D

APPLICATION:

JOB NAME:

QUANTITY: ITEM NO.

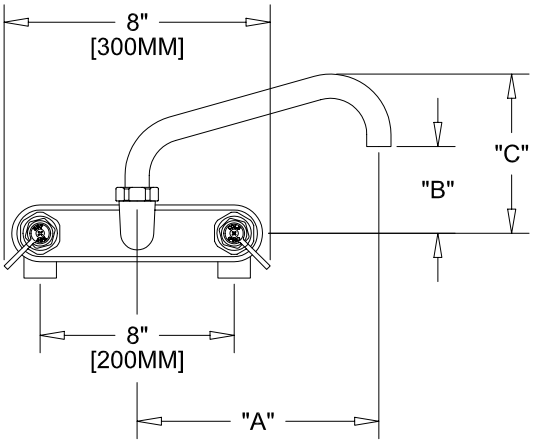

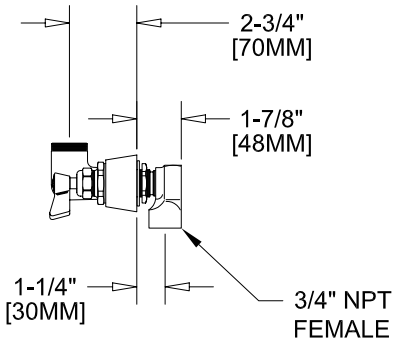

MODEL	DIM "A"	DIM "B"	DIM "C"
5412	10" [250MM]	3-5/8" [92MM]	6-5/8" [168MM]
5414	14" [350MM]	4-3/4" [120MM]	7-3/4" [197MM]

ROUGH-IN:

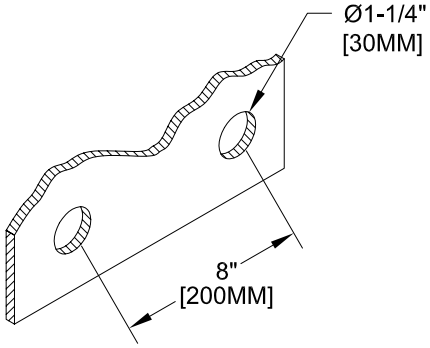

ANSI/A112.18.1M

PRODUCT NAME:

8" C/C BACKSPLASH FAUCET

☐ _____ SPECIAL CONFIGURATION
CHECK BASE MODEL AND OPTIONS

MODEL:
☐ 5412 WITH 10" SWING SPOUT
☐ 5414 WITH 14" SWING SPOUT

OPTIONS OR MODIFICATIONS:
☐ HANDLES (CROSS OR WRIST) CIRCLE STYLE
☐ VANDAL RESISTANT KIT
☐ OTHER _____

FEATURES

* 8" BACKSPLASH
* SWIVELLING SEAT DISKS
* HOT SIDE STEM - LEFT HAND
* COLD SIDE STEM - RIGHT HAND
* STAINLESS STEEL SEATS
* STAINLESS STEEL SEAT SCREWS
* STAINLESS STEEL HANDLE SCREWS
* CLOSE ELBOWS

RECOMMENDED SETTINGS
* 110°F AT 80 PSI

SYSTEM LIMITS
* TEMP: 40°F MIN. TO 140°F MAX.
* PRESSURE: 200 PSI MAX. STATIC
* 37 GPM AT 80 PSI

SHIPPING WEIGHT
* 9.0 LBS

FISHER
FISHER MANUFACTURING COMPANY
TOLL FREE: 800-421-6162 - FAX: 800-832-8238
information@fisher-mfg.com - www.fisher-mfg.com

RJS | BARBER ASSOCIATES

RJS | Barber Associates

Integrated Food Service Design

9/6/2013

ITEM# 9 - WALK IN FREEZER (1 REQ'D)

American Panel Corporation CUSTOM

WALK-IN FREEZER

7'- 0.25" X 9'- 0" X 9'- 6" high -10° F Freezer

Exposed Exterior: 20 gao stainless steel, #3 fmish

Interior Walls: .040 USDA white smooth alum.

Unexposed Exterior: 26 gao stucco acrylume

Interior Ceiling: .040 USDA white smooth alum

All panels are NSF 4" foamed-in-place urethane, UL classified with flame spread rating of20.

ACCESSORIES

Mfr	Qty	Model	Spec
American Panel Corporation	1	HINGED WALK-IN DOOR(S)	1 36" X 77" flush mount magnetic infitting door with cam-rise hinges, padlockable deadbolt handle (exterior doors only), door closer, brushed hardware, fully programmable WALK-IN MONITORING SYSTEM 100 featuring audio/visual temperature alarm with digital thermometer, high & low set points, 115V output, energy saving door frame heater wire, vapor proof light & switch with pilot light.
American Panel Corporation	1		Heated Pressure Relief Vent, Model 1825 (3" diam.), 120 volt
American Panel Corporation	1		3/4" Plywood Underlayment in Floor Panel (not available with 2" floors)
American Panel Corporation	1		High Security Mortise Cylinder Deadbolt Lock (Kason 10944-5)
American Panel Corporation	1		System 200 W-I Mon. Sys. (repl. Sys. 100), SD Mem. Card Interface, HACCP Compliant & Batt. Back-Up
American Panel Corporation	1		Panic Alarm for use with System 200 Walk-In Monitoring System (quoted separately)
American Panel Corporation	1		Relay to Enable Dry Contacts Connection on System 100 (pre-wired)
American Panel Corporation	1		PC Commun. (2-way) for System 200 Walk-In Monitoring System (quoted separately)
American Panel Corporation	1		Light Switch, CAL-OSHA, special 3-way per door with System 100 or 200 Controller
American Panel Corporation	1		CCI Clear Vu 2-pc Swing Door Curtain, 34" (or 36") x 80" opening
American Panel Corporation	1		(3) Spring-Loaded Hinges per Door
American Panel Corporation	1		Vision Window, 14" x 14" heated
American Panel Corporation	2		Door Kickplate, 14 gao SIS, 36" High, <37" Door
American Panel Corporation	1		Door bumper bar, 114" x 3" alum. (APC), int. only, requires int. KP (not incl.)
American Panel Corporation	1		Foot Treadle
American Panel Corporation	2		Trim Strips, 3" x 3", 20 gao Stainless Steel
American Panel Corporation	34		Closure Panel to 1 0' ceiling, 20 gao Stainless

		Steel
American Panel Corporation	1	Fluorescent Light Fixture, Freezer 48" double bulb (-20°F operating temp.)
American Panel Corporation	14	Bumper Rail, 4" x 18 gao SIS with wood insert & Hidden Top Mounting
American Panel Corporation	1	Motion sensor wi light activator & shut off, coolers & freezers (Kason 1901) up to 20' ceiling ht.
American Panel Corporation	1	1/8" Stainless Steel Threshold Plate (36" wide doors and below)
American Panel Corporation	1	Custom Length and Width Upcharge

ELECTRICAL

	VOLTS	CYCLE	PHASE	CONN	AFF	NEMA	AMPS	KW	HP	MCA	MOCP
1	120	60	1								

RJS | BARBER ASSOCIATES

RJS | Barber Associates

Integrated Food Service Design

9/6/2013

ITEM# 9A - FREEZER EVAPORATOR COIL (1 REQ'D)

American Panel Corporation CTE36-69

FREEZER Evaporator Coil - 208/60/1 Refer to FS-W Drawing for all mechanical information and connection points

<Included>

ELECTRICAL

	VOLTS	CYCLE	PHASE	CONN	AFF	NEMA	AMPS	KW	HP	MCA	MOCP
1	208/230	60	1				13.4/1.2				

WATER

	HOT SIZE	HOT AFF	HOT GPH	COLD SIZE	COLD AFF	FILTERED SIZE	FILTERED AFF	CONDENSER INLET SIZE	CONDENSER OUTLET SIZE
1									

WASTE

	INDIRECT SIZE	DIRECT SIZE
1	3/4"	

RJS | BARBER ASSOCIATES

RJS | Barber Associates

Integrated Food Service Design

9/6/2013

ITEM# 9B - FREEZER CONDENSOR (1 REQ'D)

American Panel Corporation A V A25IOZXTXC

FREEZER: -10/2.50 HP hermetic Air Cooled refrigeration system, 208/230/60/1

Both include center mount evapator coil, 5-year compressor warranty.

BY K.E.C. INSTALL PANEL & REFRIGERATION SYSTEMS AND ALLOW FOR DISTANCE AND LENGTH OF RUNS IN PROPERLY SIZING REFRIGERATION COMPONENTS.

Refer to FS-W Drawing for all mechanical information and connection points

ACCESSORIES

Mfr	Qty	Model	Spec
American Panel Corporation	1		Galv Weather Cover
American Panel Corporation	1		Steel Compressor Mounting Stand
American Panel Corporation	1		LASA Winterization Controls, Package

RJS | BARBER ASSOCIATES

RJS | Barber Associates

Integrated Food Service Design

9/6/2013

ITEM# 10-12 -

<Spare>

RJS | BARBER ASSOCIATES

RJS | Barber Associates

Integrated Food Service Design

9/6/2013

ITEM# 13 - PLASTIC SHELVING UNIT (6 REQ'D)

Metro 5X357GX3

MetroMax i™ Starter Shelving Unit, (5) open grid polymer shelves with Microban® antimicrobial protection, (4) posts, 74" H, 18" W, 48" L, includes (2) "S" hooks per shelf, built in Microban® antimicrobial protection, KD

Item # _____

Job _____

METROMAX i™ POLYMER SHELVING

with *Microban Antimicrobial Product Protection

Part of the innovative MetroMax iQ™ Storage System, MetroMax i™ is a lifetime storage solution. The product is corrosion proof, easy to clean, strong like wire shelving, and provides a very efficient use of storage space. MetroMax i™ is integrated with online space planning tools and tutorials. **www.metro.com/iQ**

- **Lifelong performance and corrosion proof:** All-polymer and Type 304 stainless design offers a lifetime warranty against rust and corrosion.
- **Strong and Durable:** Strong as steel, MetroMax i™ shelves hold as much weight as Metro's wire shelving and are impact resistant. Weight capacity for evenly distributed loads:
  800 lbs. (363kg) per shelf for lengths of 24" to 48" (610 to 1220mm)
  600 lbs. (275kg) per shelf for lengths of 54" (1370mm) or longer
  2,000 lbs. (907kg) maximum per stationary unit.
- **Easiest to clean and maintain:** Smooth surfaces easily wipe clean. Polymer mats can be easily removed and cleaned in a sink or dish machine. Microban antimicrobial product protection is built into the high contact areas of the shelf including the mats, frames, and posts to protect the product from bacteria, mold, mildew, and fungus that cause odors and product degradation. Microban protection keeps the product "cleaner between cleanings".
- **Smooth, Protective Surfaces:** Smooth, flat surfaces protect packaged shelf contents from unwanted rips, tears, or damage.
- **Robust Open Grid and Solid Mat Options:** Open grid shelves promote air circulation and light penetration. One-piece solid mats contain spills and are ideal to protect items on the bottom shelf from dirt or backsplashes from cleaning floors. Shelf mats are sturdy and safely support concentrated loads from instrumentation and equipment.
- **Interchangeable:** Part of the MetroMax iQ™ Storage System, corrosion proof MetroMax i™ shelves and posts are compatible with corrosion resistant MetroMax Q™ shelves and posts.
- **Efficient, Organized Storage:** Premium MetroMax iQ™ accessories efficiently organize, contain, and compartmentalize ***all*** space between shelves.
- **Fast, Easy Assembly:** MetroMax i™ assembles easily in minutes, without tools. Shelves can be adjusted at 1" (25mm) increments along the post. Shelf wedges have a window to locate your desired position.

MetroMax i™ Mobile Unit

NSF

MetroMax i™ with Accessories

*MICROBAN® and the MICROBAN® symbol are registered trademarks of the Microban Products Company, Huntersville, NC.

InterMetro Industries Corporation
North Washington Street
Wilkes-Barre, PA 18705
www.metro.com

EMERSON

METRO MetroMax i™ Polymer Shelving

9.20

METROMAX i™ POLYMER SHELVING

Specifications

- **Longitudinal Beams and Posts:** Pultrusions — continuous glass fibers and thermoset resin composite with built-in Microban® antimicrobial product protection.
- **End Beams, Adjustable Foot and Socket:** Injection molded polyester thermoplastic resin with glass reinforcement
- **Shelf Wedge Connector:** reinforced nylon
- **Mats, Open and Solid:** Mineral reinforced polypropylene. Mats contain Microban® antimicrobial.
- **Post Cap and Center Beam Cap:** High-density polyethylene.
- **"S" Hook Tab Hole Plug:** Vinyl.
- **Collar and "S" Hook:** Type 304 Stainless Steel.
- **Bonding of Longitudinal Beams to End Beams:** High temperature polyamide adhesive and stainless steel screws.
- **Continuous Temperature —** MetroMax i™ can be used continuously within a range of -20/120° F (-29/49° C) with intermittent exposure to 212° F (100° C) for cleaning.

Standard Shelves

- Part number includes shelf with removable mats and one bag of wedges

Nominal Width (in.)	(mm)	Nominal Length (in.)	(mm)	Shelf with Grid Mat Model No.	Approx. Pkd. Wt. (lbs.)	(kg)	Shelf with Solid Mat Model No.	Approx. Pkd. Wt. (lbs.)	(kg)
18	457	24	610	MX1824G	8.7	4.0	MX1824F	12.7	5.8
18	457	30	760	MX1830G	10.5	4.7	MX1830F	14.5	6.6
18	457	36	914	MX1836G	12.2	5.5	MX1836F	17.2	7.8
18	457	42	1060	MX1842G	13.9	5.3	MX1842F	20.1	9.1
18	457	48	1220	MX1848G	15.7	7.1	MX1848F	23.1	10.5
18	457	54	1372	MX1854G	17.5	7.9	MX1854F	21.5	9.7
18	457	60	1524	MX1860G	19.2	8.7	MX1860F	23.2	10.5
18	457	72	1829	MX1872G	22.5	10.2	MX1872F	27.5	12.5
24	610	24	610	MX2424G	12.2	5.5	MX2424F	14.2	6.4
24	610	30	760	MX2430G	13.9	6.3	MX2430F	15.9	7.2
24	610	36	914	MX2436G	15.6	7.1	MX2436F	19.6	8.9
24	610	42	1060	MX2442G	17.5	7.9	MX2442F	21.5	9.8
24	610	48	1220	MX2448G	19.3	8.7	MX2448F	25.3	11.5
24	610	54	1372	MX2454G	21.0	9.5	MX2454F	25.0	11.3
24	610	60	1524	MX2460G	22.8	10.5	MX2460F	26.8	12.1
24	610	72	1829	MX2472G	26.0	11.8	MX2472F	31.0	14.1

Actual Dimensions:
Width: Add 1/4" (6mm) to nominal size.
Length: Subtract 9/32" (7mm) from nominal size.

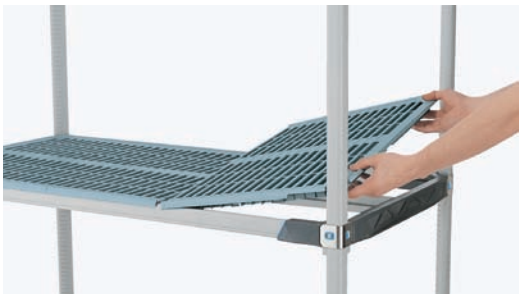

MetroMax i Open Grid Shelf

MetroMax i™ Solid Shelf

Heavy-Duty Dunnage Shelves

- Open grid and solid mat options.
- Compatible for use on MetroMax i™ and MetroMax Q shelving units.
- Weight capacity per shelf evenly distributed: 1,200 lbs. (544kg) on shelves up to and including 48" (1220mm) long; 900 lbs. (408kg) for shelves 60" (1524mm) long.
- Dunnage shelves are recommended for use on units with four posts, not as part of an add-on unit with two posts.

Nominal Width (in.)	(mm)	Nominal Length (in.)	(mm)	Shelf with Grid Mat Model No.	Approx. Pkd. Wt. (lbs.)	(kg)	Shelf with Solid Mat Model No.	Approx. Pkd. Wt. (lbs.)	(kg)
18	457	36	914	MHP1836G	18	8.2	MHP1836F	22	10.0
18	457	48	1220	MHP1848G	22	10.0	MHP1848F	26	11.8
18	457	60	1524	MHP1860G	26	11.8	MHP1860F	30	13.6
24	610	36	914	MHP2436G	21	9.5	MHP2436F	25	11.3
24	610	48	1220	MHP2448G	27	12.2	MHP2448F	31	14.1
24	610	60	1524	MHP2460G	33	15.0	MHP2460F	37	16.8

Heavy-Duty Dunnage Shelf

METROMAX i™ POLYMER SHELVING

Polymer Posts

- Corrosion proof with built-in Microban antimicrobial product protection.
- Compatible for use with MetroMax i™ and MetroMax Q shelves.
- Stationary posts include an adjustable leveling foot to compensate for uneven floors. Leveling foot can be adjusted 1" (25mm).
- When mounting a shelving unit to a dolly base, stationary posts are used.
- Special height cut posts are available. Consult your Metro representative.

Nominal Height (in.)	(mm)	Approx. Pkd. Wt. (lbs.)	(kg)	Stationary Post with Leveling Foot Model No.	Actual Height* (in.)	(mm)	Post for Stem Caster Model No.	Actual Height (in.)	(mm)
9	228	0.3	0.15				MX9UP	9 1/4	235
13	370	0.5	0.2	MX13P	14 3/4	375	MX13UP	13 3/4	349
27	685	0.9	0.4	MX27P	26 3/4	730	MX27UP	27 3/4	705
33	875	1.0	0.5	MX33P	34 3/4	883	MX33UP	33 3/4	857
54	1370	1.6	0.7	MX54P	54 3/4	1391	MX54UP	53 3/4	1365
63	1585	1.8	0.8	MX63P	62 3/4	1594	MX63UP	61 3/4	1568
74	1690	2.2	1.0	MX74P	74 3/4	1899	MX74UP	73 3/4	1873
86	2195	2.5	1.1	MX86P	86 3/4	2203	MX86UP	85 3/4	2178

Replacement Leveling Foot: Model No. RPM3-FOOT

Replacement Post Cap: Model No. RPMX3-POSTCAP

Replacement MetroMax i™ Wedges: Model No. MX9985 Bag of 4

Polymer Stationary Post

Replacement Shelf Wedges MX9985

NOTE: Compatibility with existing Metro polymer mat shelving systems
- MetroMax i™ is interchangeable with MetroMax Q shelves (manufactured within or after April 2009) and MetroMax Q posts.
- MetroMax i™ shelves, posts, and wedges are NOT compatible with original MetroMax shelves, posts, and wedges manufactured before April 2009.

Post Clamp

Adds stability by joining posts of two separate units together. With it, each unit is supported by four posts and buttressed by the adjacent unit.
Model No. 9994X

Foot Plate

Use to add stability to the shelving unit or to bolt units to the floor.
Model No. Zinc 9993Z
Model No. Stainless Steel 9993S

Stem Casters

A variety of stem casters are offered for MetroMax i™ mobile applications.
Stem caster models include bumpers.
See Catalog Sheet 11.20 for stem casters.

Load Rating: 3 x Stem Caster Load Rating, maximum — 900 lbs. (363kg) per stem caster cart.

Replacement Bumper M9992DBX

9.20

MetroMax i™ Polymer Shelving

Job _____

METROMAX i™ POLYMER SHELVING

Starter and Add-On Units

- 4- and 5-tier models available. Consult the Metro catalog for models.
- Starter units: consist of shelves and (4) posts
- Add-on units: consist of shelves, (2) posts, and "S" Hooks (M9995)

"S" Hook: Used to "add on" one or multiple MetroMax i™ storage systems while eliminating the cost of two posts per unit. Can be used to join units end-to-end, back-to-back, at right angles, etc. Two "S" hooks are required for each shelf.
Model No. M9995

MetroMax i™ Intermediate "S" Hook Kit: Includes one intermediate bracket (pictured) and two "S" hooks. Snaps onto front or back of MetroMax i™ shelf when joining units at right angles. Order one kit per shelf.
Model No. MX9996

- Regular "S" Hook location
- Intermediate bracket location
- Post
- Post not required

END-TO END
"S" Hooks
M9995 — qty. 2

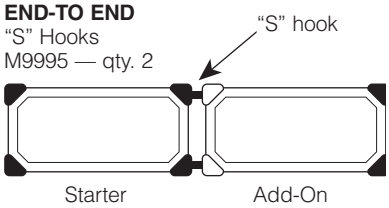

RIGHT ANGLES
Intermediate "S" Hook Kit
MX9996 — qty. 1

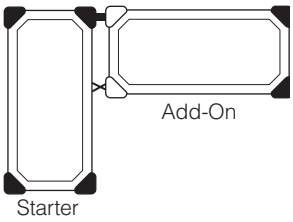

COMBINATION
Intermediate "S" Hook Kits
MX9996 — qty. 2

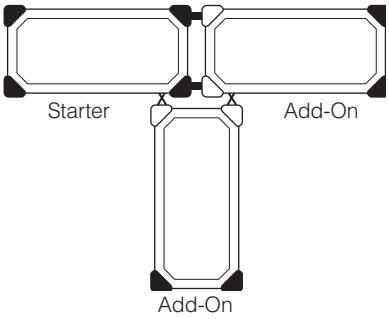

MetroMax i™ Carts

- 4- and 5-tier models
- All-grid and all-solid shelf models
- Units consist of shelves, (4) posts, (2) swivel, and (2) swivel brake casters.
- Consult the Metro catalog for models.

All Metro Catalog Sheets are available on our Web Site: **www.metro.com**

InterMetro Industries Corporation
North Washington Street, Wilkes-Barre, PA 18705
Phone: 570-825-2741
Fax: 570-825-2852

L02-177
Printed in U.S.A. 4/09

Information and specifications are subject to change without notice. Please confirm at time of order.

Copyright © 2009 InterMetro Industries Corp.

For Product Information:
U.S. and Canada: 1.800.433.2232
Latin America: 1.561.333.3824
Europe: +31.76.587.7550
Asia/Pacific: +65.6567.8003
Middle East/Africa: +971.4.811.8286

RJS | BARBER ASSOCIATES

RJS | Barber Associates

Integrated Food Service Design

9/6/2013

ITEM# 14 - PLASTIC SHELVING UNIT (3 REQ'D)

Metro 5X337GX3

MetroMax i™ Starter Shelving Unit, (5) open grid polymer shelves with Microban® antimicrobial protection, (4) posts, 74" H, 18" W, 36" L, includes (2) "S" hooks per shelf, built in Microban® antimicrobial protection, KD

Item # _____

Job _____

METROMAX i™ POLYMER SHELVING

with *Microban Antimicrobial Product Protection

Part of the innovative MetroMax iQ™ Storage System, MetroMax i™ is a lifetime storage solution. The product is corrosion proof, easy to clean, strong like wire shelving, and provides a very efficient use of storage space. MetroMax i™ is integrated with online space planning tools and tutorials. **www.metro.com/iQ**

- **Lifelong performance and corrosion proof:** All-polymer and Type 304 stainless design offers a lifetime warranty against rust and corrosion.
- **Strong and Durable:** Strong as steel, MetroMax i™ shelves hold as much weight as Metro's wire shelving and are impact resistant. Weight capacity for evenly distributed loads:
  800 lbs. (363kg) per shelf for lengths of 24" to 48" (610 to 1220mm)
  600 lbs. (275kg) per shelf for lengths of 54" (1370mm) or longer
  2,000 lbs. (907kg) maximum per stationary unit.
- **Easiest to clean and maintain:** Smooth surfaces easily wipe clean. Polymer mats can be easily removed and cleaned in a sink or dish machine. Microban antimicrobial product protection is built into the high contact areas of the shelf including the mats, frames, and posts to protect the product from bacteria, mold, mildew, and fungus that cause odors and product degradation. Microban protection keeps the product "cleaner between cleanings".
- **Smooth, Protective Surfaces:** Smooth, flat surfaces protect packaged shelf contents from unwanted rips, tears, or damage.
- **Robust Open Grid and Solid Mat Options:** Open grid shelves promote air circulation and light penetration. One-piece solid mats contain spills and are ideal to protect items on the bottom shelf from dirt or backsplashes from cleaning floors. Shelf mats are sturdy and safely support concentrated loads from instrumentation and equipment.
- **Interchangeable:** Part of the MetroMax iQ™ Storage System, corrosion proof MetroMax i™ shelves and posts are compatible with corrosion resistant MetroMax Q™ shelves and posts.
- **Efficient, Organized Storage:** Premium MetroMax iQ™ accessories efficiently organize, contain, and compartmentalize ***all*** space between shelves.
- **Fast, Easy Assembly:** MetroMax i™ assembles easily in minutes, without tools. Shelves can be adjusted at 1" (25mm) increments along the post. Shelf wedges have a window to locate your desired position.

MetroMax i™ Mobile Unit

NSF

MetroMax i™ with Accessories

*MICROBAN® and the MICROBAN® symbol are registered trademarks of the Microban Products Company, Huntersville, NC.

InterMetro Industries Corporation
North Washington Street
Wilkes-Barre, PA 18705
www.metro.com

EMERSON

METRO MetroMax i™ Polymer Shelving

9.20

METROMAX i™ POLYMER SHELVING

Specifications

- **Longitudinal Beams and Posts:** Pultrusions — continuous glass fibers and thermoset resin composite with built-in Microban® antimicrobial product protection.
- **End Beams, Adjustable Foot and Socket:** Injection molded polyester thermoplastic resin with glass reinforcement
- **Shelf Wedge Connector:** reinforced nylon
- **Mats, Open and Solid:** Mineral reinforced polypropylene. Mats contain Microban® antimicrobial.
- **Post Cap and Center Beam Cap:** High-density polyethylene.
- **"S" Hook Tab Hole Plug:** Vinyl.
- **Collar and "S" Hook:** Type 304 Stainless Steel.
- **Bonding of Longitudinal Beams to End Beams:** High temperature polyamide adhesive and stainless steel screws.
- **Continuous Temperature —** MetroMax i™ can be used continuously within a range of -20/120° F (-29/49° C) with intermittent exposure to 212° F (100° C) for cleaning.

Standard Shelves

- Part number includes shelf with removable mats and one bag of wedges

Nominal Width (in.)	(mm)	Nominal Length (in.)	(mm)	Shelf with Grid Mat Model No.	Approx. Pkd. Wt. (lbs.)	(kg)	Shelf with Solid Mat Model No.	Approx. Pkd. Wt. (lbs.)	(kg)
18	457	24	610	MX1824G	8.7	4.0	MX1824F	12.7	5.8
18	457	30	760	MX1830G	10.5	4.7	MX1830F	14.5	6.6
18	457	36	914	MX1836G	12.2	5.5	MX1836F	17.2	7.8
18	457	42	1060	MX1842G	13.9	5.3	MX1842F	20.1	9.1
18	457	48	1220	MX1848G	15.7	7.1	MX1848F	23.1	10.5
18	457	54	1372	MX1854G	17.5	7.9	MX1854F	21.5	9.7
18	457	60	1524	MX1860G	19.2	8.7	MX1860F	23.2	10.5
18	457	72	1829	MX1872G	22.5	10.2	MX1872F	27.5	12.5
24	610	24	610	MX2424G	12.2	5.5	MX2424F	14.2	6.4
24	610	30	760	MX2430G	13.9	6.3	MX2430F	15.9	7.2
24	610	36	914	MX2436G	15.6	7.1	MX2436F	19.6	8.9
24	610	42	1060	MX2442G	17.5	7.9	MX2442F	21.5	9.8
24	610	48	1220	MX2448G	19.3	8.7	MX2448F	25.3	11.5
24	610	54	1372	MX2454G	21.0	9.5	MX2454F	25.0	11.3
24	610	60	1524	MX2460G	22.8	10.5	MX2460F	26.8	12.1
24	610	72	1829	MX2472G	26.0	11.8	MX2472F	31.0	14.1

Actual Dimensions:
Width: Add 1/4" (6mm) to nominal size.
Length: Subtract 9/32" (7mm) from nominal size.

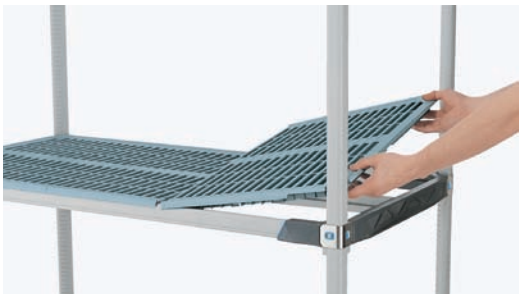

MetroMax i Open Grid Shelf

MetroMax i™ Solid Shelf

Heavy-Duty Dunnage Shelves

- Open grid and solid mat options.
- Compatible for use on MetroMax i™ and MetroMax Q shelving units.
- Weight capacity per shelf evenly distributed: 1,200 lbs. (544kg) on shelves up to and including 48" (1220mm) long; 900 lbs. (408kg) for shelves 60" (1524mm) long.
- Dunnage shelves are recommended for use on units with four posts, not as part of an add-on unit with two posts.

Nominal Width (in.)	(mm)	Nominal Length (in.)	(mm)	Shelf with Grid Mat Model No.	Approx. Pkd. Wt. (lbs.)	(kg)	Shelf with Solid Mat Model No.	Approx. Pkd. Wt. (lbs.)	(kg)
18	457	36	914	MHP1836G	18	8.2	MHP1836F	22	10.0
18	457	48	1220	MHP1848G	22	10.0	MHP1848F	26	11.8
18	457	60	1524	MHP1860G	26	11.8	MHP1860F	30	13.6
24	610	36	914	MHP2436G	21	9.5	MHP2436F	25	11.3
24	610	48	1220	MHP2448G	27	12.2	MHP2448F	31	14.1
24	610	60	1524	MHP2460G	33	15.0	MHP2460F	37	16.8

Heavy-Duty Dunnage Shelf

METROMAX i™ POLYMER SHELVING

Polymer Posts

- Corrosion proof with built-in Microban antimicrobial product protection.
- Compatible for use with MetroMax i™ and MetroMax Q shelves.
- Stationary posts include an adjustable leveling foot to compensate for uneven floors. Leveling foot can be adjusted 1" (25mm).
- When mounting a shelving unit to a dolly base, stationary posts are used.
- Special height cut posts are available. Consult your Metro representative.

Nominal Height (in.)	(mm)	Approx. Pkd. Wt. (lbs.)	(kg)	Stationary Post with Leveling Foot Model No.	Actual Height* (in.)	(mm)	Post for Stem Caster Model No.	Actual Height (in.)	(mm)
9	228	0.3	0.15				MX9UP	9 1/4	235
13	370	0.5	0.2	MX13P	14 3/4	375	MX13UP	13 3/4	349
27	685	0.9	0.4	MX27P	26 3/4	730	MX27UP	27 3/4	705
33	875	1.0	0.5	MX33P	34 3/4	883	MX33UP	33 3/4	857
54	1370	1.6	0.7	MX54P	54 3/4	1391	MX54UP	53 3/4	1365
63	1585	1.8	0.8	MX63P	62 3/4	1594	MX63UP	61 3/4	1568
74	1690	2.2	1.0	MX74P	74 3/4	1899	MX74UP	73 3/4	1873
86	2195	2.5	1.1	MX86P	86 3/4	2203	MX86UP	85 3/4	2178

Replacement Leveling Foot: Model No. RPM3-FOOT

Replacement Post Cap: Model No. RPMX3-POSTCAP

Replacement MetroMax i™ Wedges: Model No. MX9985 Bag of 4

Polymer Stationary Post

Replacement Shelf Wedges MX9985

NOTE: Compatibility with existing Metro polymer mat shelving systems
- MetroMax i™ is interchangeable with MetroMax Q shelves (manufactured within or after April 2009) and MetroMax Q posts.
- MetroMax i™ shelves, posts, and wedges are NOT compatible with original MetroMax shelves, posts, and wedges manufactured before April 2009.

Post Clamp

Adds stability by joining posts of two separate units together. With it, each unit is supported by four posts and buttressed by the adjacent unit.
Model No. 9994X

Foot Plate

Use to add stability to the shelving unit or to bolt units to the floor.
Model No. Zinc 9993Z
Model No. Stainless Steel 9993S

Stem Casters

A variety of stem casters are offered for MetroMax i™ mobile applications.
Stem caster models include bumpers.
See Catalog Sheet 11.20 for stem casters.

Load Rating: 3 x Stem Caster Load Rating, maximum — 900 lbs. (363kg) per stem caster cart.

Replacement Bumper M9992DBX

9.20

MetroMax i™ Polymer Shelving

Job _____

METROMAX i™ POLYMER SHELVING

Starter and Add-On Units

- 4- and 5-tier models available. Consult the Metro catalog for models.
- Starter units: consist of shelves and (4) posts
- Add-on units: consist of shelves, (2) posts, and "S" Hooks (M9995)

"S" Hook: Used to "add on" one or multiple MetroMax i™ storage systems while eliminating the cost of two posts per unit. Can be used to join units end-to-end, back-to-back, at right angles, etc. Two "S" hooks are required for each shelf.
Model No. M9995

MetroMax i™ Intermediate "S" Hook Kit: Includes one intermediate bracket (pictured) and two "S" hooks. Snaps onto front or back of MetroMax i™ shelf when joining units at right angles. Order one kit per shelf.
Model No. MX9996

- Regular "S" Hook location
- Intermediate bracket location
- Post
- Post not required

END-TO END
"S" Hooks
M9995 — qty. 2

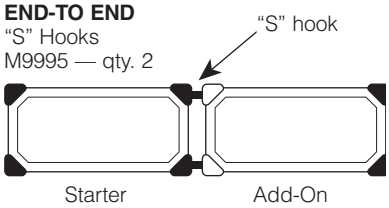

RIGHT ANGLES
Intermediate "S" Hook Kit
MX9996 — qty. 1

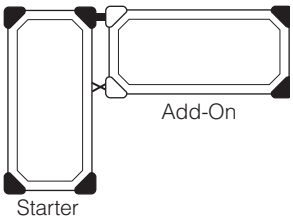

COMBINATION
Intermediate "S" Hook Kits
MX9996 — qty. 2

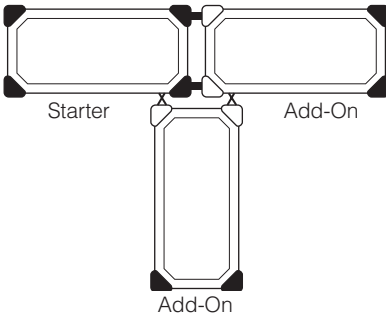

MetroMax i™ Carts

- 4- and 5-tier models
- All-grid and all-solid shelf models
- Units consist of shelves, (4) posts, (2) swivel, and (2) swivel brake casters.
- Consult the Metro catalog for models.

All Metro Catalog Sheets are available on our Web Site: **www.metro.com**

InterMetro Industries Corporation
North Washington Street, Wilkes-Barre, PA 18705
Phone: 570-825-2741
Fax: 570-825-2852

L02-177
Printed in U.S.A. 4/09

Information and specifications are subject to change without notice. Please confirm at time of order.

Copyright © 2009 InterMetro Industries Corp.

For Product Information:
U.S. and Canada: 1.800.433.2232
Latin America: 1.561.333.3824
Europe: +31.76.587.7550
Asia/Pacific: +65.6567.8003
Middle East/Africa: +971.4.811.8286

RJS | BARBER ASSOCIATES

RJS | Barber Associates

Integrated Food Service Design

9/6/2013

ITEM# 15 - EYE WASH SHOWER STATION (1 REQ'D)

Bradley Corp. S19-310JJ

Eye wash & drench shower station

ACCESSORIES

Mfr	Qty	Model	Spec
Bradley Corp.	1	S19-2100	Navigator EFX25 - Emergency Thermostatic Mixing Valve

WATER

	HOT SIZE	HOT AFF	HOT GPH	COLD SIZE	COLD AFF	FILTERED SIZE	FILTERED AFF	CONDENSER INLET SIZE	CONDENSER OUTLET SIZE
1	3/4"			3/4"-1-1/4"					

WASTE

	INDIRECT SIZE	DIRECT SIZE
1	1-1/2	

S19-310JJ
Chrome-Plated Brass Drench Shower/Eyewash Unit

- Complies with American National Standard Z358.1
- Combination Units may be Top-Supplied or Mid-Supplied
- Bright Mirror Finish
- Chrome-Plated Red Brass Pipe and Fittings
- Universal Identification Sign and Inspection Tag Included
- Full, One-Year Warranty
- Patent Pending
- Classified by Underwriters Laboratory Inc. to ANSI Z358.1

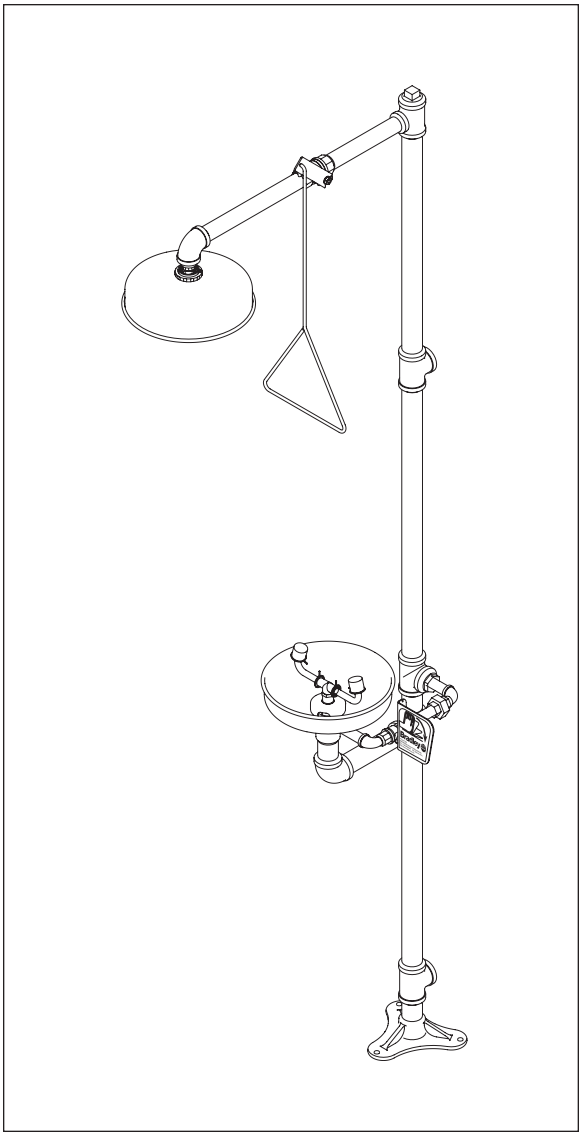

Specifications

Combination Drench Shower/Eyewash Unit saves space and fits easily into any work environment. Shower valve operates quickly by a pull rod with a triangular handle. Shower provides a superior washdown with a more even spray pattern. Eyewash operated by a large, highly visible push handle. Safe, steady water flow under varying water supply conditions from 30–90 PSI is assured by integral flow control in the sprayhead assembly. NOTE: The ANSI Z358.1 standard requires an uninterruptible supply of flushing fluid at a minimum 30 PSI flowing pressure.

This plumbing fixture is not intended to dispense water for human consumption through drinking or for preparation of food or beverages.

Local codes may require the installation of a backflow prevention valve to complete proper installation. Compliance with local codes is the responsibility of the installer. Valve must be tested annually to verify that it is functioning properly. Backflow prevention valves are not included with the fixture and may be supplied by the contractor or purchased from Bradley Corporation.

Model	Description
☐ **S19-310JJ**	Chrome-Plated Brass Drench Shower/Eyewash Unit
☐ **S19-2100**	Navigator EFX25 - Emergency Thermostatic Mixing Valve

Recommended Option:

Navigator S19-2100 EFX25
Emergency Thermostatic Mixing Valve

NAVIGATOR

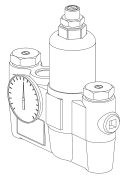

Satisfies ANSI Z358.1
tepid water requirements.

Emergency Fixtures
Document No. 4580

Page 1 of 2
This information is subject to change without notice.
2/10/2012

© 2012 Bradley
P.O. Box 309, Menomonee Falls, WI 53052-0309
Phone: 800.BRADLEY (800.272.3539) Fax: 262.251.5817
bradleycorp.com

S19-310JJ
Chrome-Plated Brass Drench Shower/Eyewash Unit

Standard Equipment

SpinTec™ Showerhead
3.1" (78.7mm) diameter highly visible yellow impact-resistant plastic includes a 10-3/4" [273mm] diameter corrosion-resistant stainless steel shroud. SpinTec drench showerhead features integral 26 GPM flow control, conserving water and helping to accurately size your tepid water system.

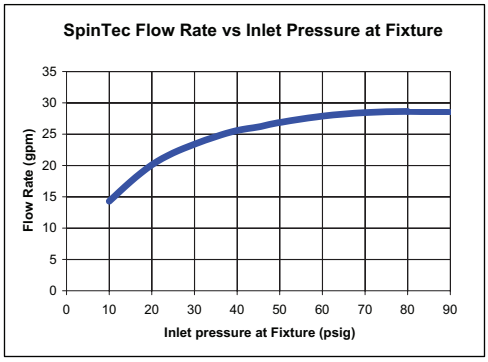

Eyewash Bowl
10¾" (273mm) diameter corrosion-resistant stainless steel.

Standard Sprayhead Assembly
Chrome-plated brass sprayhead with twin soft-flow eyewash heads and protective sprayhead covers. Safe, steady water flow under varying water supply conditions from 30–90 PSI is assured by integral flow control in the sprayhead assembly.

Shower Valve
Chrome-plated brass 1" NPT stay-open ball valve. Operated by a stainless steel pull rod with triangular handle.

Eyewash Valve
Chrome-plated brass ½" NPT stay-open ball valve. Hand operated by highly visible stainless steel push handle.

Pipe and Fittings
Chrome-plated red brass.

Water Supply
1¼" NPT.

All dimensions assume standard thread engagement. Variations in manufacturing allow for +/- ⅛" (3mm) per threaded joint. To find the tolerance of a dimension, add the number of thread joints in between a dimension and multiply it by ⅛" (3mm).

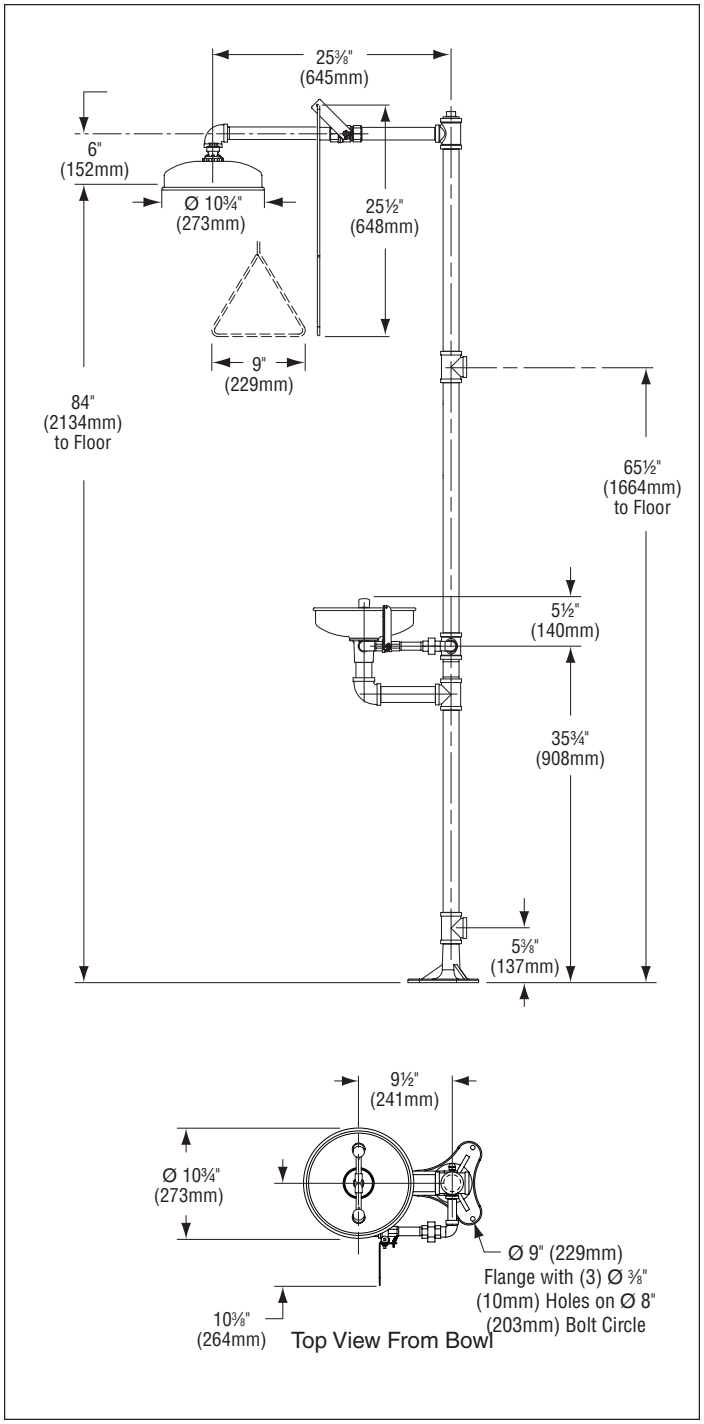

Emergency Fixtures
Document No. 4580

This information is subject to change without notice.
2/10/2012

© 2012 Bradley
P.O. Box 309, Menomonee Falls, WI 53052-0309
Phone: 800.BRADLEY (800.272.3539) Fax: 262.251.5817
bradleycorp.com

RJS | BARBER ASSOCIATES

RJS | Barber Associates

Integrated Food Service Design

9/6/2013

ITEM# 15A - FLOOR TROUGH (1 REQ'D)

IMC/Teddy FT-1224-SG

FT Floor Trough, 12" wide x 24" long x 4" deep, with drain & (SG) subway grating

WATER

	HOT SIZE	HOT AFF	HOT GPH	COLD SIZE	COLD AFF	FILTERED SIZE	FILTERED AFF	CONDENSER INLET SIZE	CONDENSER OUTLET SIZE
1									

WASTE

	INDIRECT SIZE	DIRECT SIZE
1		2"

Project_____Consultant_____Model Number_____Item Number_____

FT Floor Troughs
Standard Design

SPECIFICATION:

FT Model Floor Troughs are 14-gauge type 304 stainless steel, with large integral coves and pitched 1/4” per foot to a 6 1/2” OD waste outlet with 4” OD tailpiece. Perforated waste basket provided at each drain. Anchor straps welded to the sides secure trough to the floor.

Recessed flange and 1” deep ledge for IMC grating are integral with the unit. Trough is 4” deep overall.

Joints are TIG welded and leak-proof. Exposed surfaces finished brush satin.

PRODUCT GUIDE:

Use for Institutional and Public Buildings or large food prep facilities.

Integral coves, deep pitch and a large waste cup, assure quick and complete drainage.

Recessed flange supports floor tile and provides a grout pocket.

Setting frame for waterproof membrane and/or integral seepage flange with “weep” holes can be added for wet floor areas.

Extension arms and intersections available for multiple equipment layout.

OPTIONS:

- ☐ 12-gauge stainless steel
- ☐ Scrap collection tray
- ☐ Use with any style IMC trough grating
- ☐ Custom designs, sizes and waste location.
- ☐ Optional wastes and locations
- ☐ Seepage flange and “weep” holes.
- ☐ See Price Book for other options.
- ☐ Standard and stock sizes fit most applications.

*Price page 34

Specifications subject to change without notice.

IMC/TEDDY FOOD SERVICE EQUIPMENT

P.O. Box 206
Copiague, NY 11726-0206

800-221-5644/631-789-8881
Fax: 631-789-3633

www.imcteddy.com

FT-30 1007

FT Floor Troughs
Standard Design

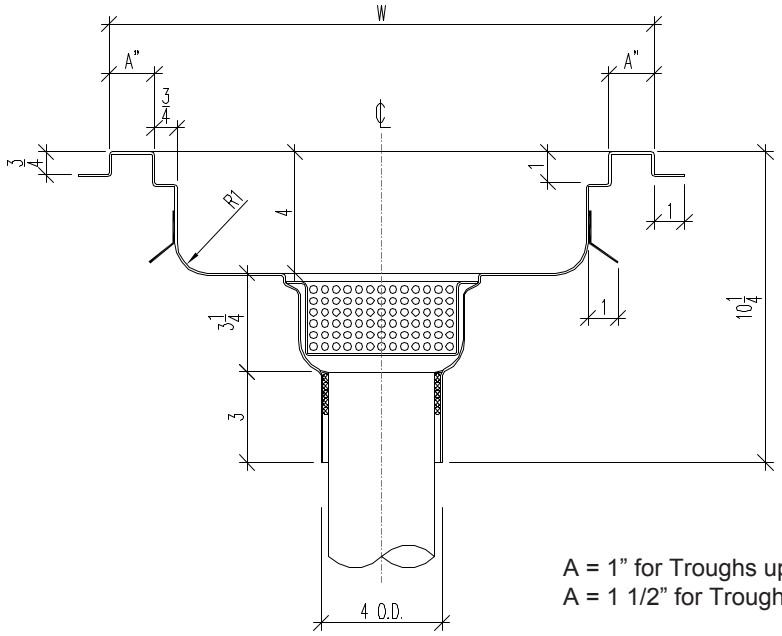

A = 1” for Troughs up to 15” Wide
A = 1 1/2” for Troughs over 15” Wide

FLOOR TROUGHS, STANDARD DESIGN - 4” Deep

MODEL	SIZE (W x L)	METRIC	WEIGHT		MODEL	SIZE (W x L)	METRIC	WEIGHT
FT-1224	12” x 24”	305 x 610	16		FT-2424	24” x 24”	610 x 610	28
FT-1236	12” x 36”	305 x 914	24		FT-2436	24” x 36”	610 x 914	42
FT-1248	12” x 48”	305 x 1219	32		FT-2448	24” x 48”	610 x 1219	56
FT-1260	12” x 60”	305 x 1524	40		FT-2460	24” x 60”	610 x 1524	70
FT-1272	12” x 72”	305 x 1829	48		FT-2472	24” x 72”	610 x 1829	84
FT-1284	12” x 84”	305 x 2134	56		FT-2484	24” x 84”	610 x 2134	98
FT-1296	12” x 96”	305 x 2438	64		FT-2496	24” x 96”	610 x 2438	112
FT-12108	12” x 108”	305 x 2743	72		FT-24108	24” x 108”	610 x 2743	126
FT-12120	12” x 120”	305 x 3048	80		FT-24120	24” x 120”	610 x 3048	140
FT-1824	18” x 24”	458 x 610	20		FT-3024	30” x 24”	762 x 610	42
FT-1836	18” x 36”	458 x 914	30		FT-3036	30” x 36”	762 x 914	63
FT-1848	18” x 48”	458 x 1219	40		FT-3048	30” x 48”	762 x 1219	84
FT-1860	18” x 60”	458 x 1524	50		FT-3060	30” x 60”	762 x 1524	105
FT-1872	18” x 72”	458 x 1829	60		FT-3072	30” x 72”	762 x 1829	126
FT-1884	18” x 84”	458 x 2134	70		FT-3084	30” x 84”	762 x 2134	147
FT-1896	18” x 96”	458 x 2438	80		FT-3096	30” x 96”	762 x 2438	168
FT-18108	18” x 108”	458 x 2743	90		FT-30108	30” x 108”	762 x 2743	189
FT-18120	18” x 120”	458 x 3048	100		FT-30120	30” x 120”	762 x 3048	210

Note - Standard troughs up to 96” have one (1) waste at center. Over 96”, troughs have two (2) wastes equidistant.

*See Price book page 34, 38, 42, 46, 52, 54, 56-59 for additional sizes and options.

Specifications subject to change without notice.

IMC/TEDDY
FOOD SERVICE EQUIPMENT

P.O. Box 206
Copiague, NY 11726-0206

800-221-5644/631-789-8881
Fax: 631-789-3633

www.imcteddy.com

FT-30 1007

RJS | BARBER ASSOCIATES

RJS | Barber Associates

Integrated Food Service Design

9/6/2013

ITEM# 16 - AIR CURTAIN (1 REQ'D)

Mars Air Systems PH1048-1EBB-PW

Phantom 10 Series Air Door, for 48 wide door, Electric Heated, (1) 1/2 HP motor, 208vv/60/1-ph, cETLus, Pearl White powder coated cabinet

ACCESSORIES

Mfr	Qty	Model	Spec
Mars Air Systems	1		18 month warranty, standard
Mars Air Systems	1		Pearl white, standard finish; contact factory for other colors
Mars Air Systems	1	J0034	Level 2 control package, line voltage control, door limit switch, adjustable time delay, (1 sec-17 min)
Mars Air Systems	1	HL2SPD	Two Speed motor, with Hi/Lo switch located on control panel

RJS | BARBER ASSOCIATES

RJS | Barber Associates

Integrated Food Service Design

9/6/2013

ITEM# 17 - ADA WORK TABLE, 120" LONG (1 REQ'D)

Custom CUSTOM

Work Table, 36" wide top with splash at rear only, 96" long, with s/s legs, side & rear s/s crossrails, 14 gauge, type 304 stainless steel top, no backsplash, s/s bullet feet to meet ADA Standards

ACCESSORIES

Mfr	Qty	Model	Spec
Custom	1	CUSTOM	Sink Welded Into Table Top, 14" X 16" X(6-1/2" max depth) - Provide off-set drain to meet ADA Standards. Refer to elevation drawings for details
Zurn Industries	1	Z6915	AquaSense® Electronic Faucet, deck mount, 4" centerset, 7-1/8" centerline spout w/sensor module, 30 second time out, in-line filter, 1.5 gallons per minute vandal-resistant aerator, battery operated

ELECTRICAL

	VOLTS	CYCLE	PHASE	CONN	AFF	NEMA	AMPS	KW	HP	MCA	MOCP
1	120/1			Direct			1.5				

WATER

	HOT SIZE	HOT AFF	HOT GPH	COLD SIZE	COLD AFF	FILTERED SIZE	FILTERED AFF	CONDENSER INLET SIZE	CONDENSER OUTLET SIZE
1	1/2"			1/2"					

WASTE

	INDIRECT SIZE	DIRECT SIZE
1	1-1/2"	

ZURN®

AquaSense®

TAG _____

AquaSense Sensor Faucet

Suffix Options (Check/Specify Appropriate Options)

____	**-A**	2.0 GPM Vandal Resistant Aerator
____	**-C**	2.2 GPM Laminar Flow Control
____	**-F**	.5 GPM Vandal Resistant Aerator
____	**-IA3**	Inlet Adaptor (3/8"[10] compression)
____	**-MJ**	Mini Junction Box
____	**-MT**	Mixing Tee
____	**-MV**	Temperature Mixing Valve
____	**-SH**	Supply Hoses for Mixing Valve
____	**-SSH**	Single Supply Hose
____	**-TMV**	Thermostatic Mixing Valve for Multiple Faucets
____	**-TMV-1**	Thermostatic Mixing Valve for Single Faucets
____		Other

☐ Z6915 AquaSense Battery Powered Faucet

ENGINEERING SPECIFICATION: The Z6915 sensor faucet is a battery powered sensor faucet with an integral four inch cover plate for retrofit and new construction. The faucet incorporates an infrared convergence-type proximity sensor into the chrome plated cast brass spout. The faucet is furnished complete with sensor module, spout module and in-line filter, 4 "AA" batteries, a 1.5 GPM vandal resistant aerator and an inlet for a 1/2"[13] ball riser supply hose. Sensor range is factory set for optimum performance.

☐ Z6915-ACA AquaSense Plug-In Powered Faucet

ENGINEERING SPECIFICATION: The Z6915-ACA sensor faucet is a plug-in powered electronic sensor faucet with an integral four inch cover plate for retrofit and new construction. The faucet incorporates an infrared convergence-type proximity sensor into the chrome plated cast brass spout. The faucet is furnished complete with sensor module, spout module, in-line filter, a 1.5 GPM vandal resistant aerator, 6 VDC plug-in power converter and an inlet for a 1/2"[13] ball riser or supply hose. Also included are 4 'AA' batteries that provide battery backup power to the faucet during power outages. Sensor range is factory set for optimum performance.

☐ Z6915-CWB AquaSense Hardwire Powered Faucet

ENGINEERING SPECIFICATION: The Z6915-CWB sensor faucet is a hardwired electronic sensor faucet with an integral four inch cover plate for retrofit and new construction. The faucet incorporates an infrared convergence-type proximity sensor into the chrome plated cast brass spout. The faucet is furnished complete with sensor module, spout module, in-line filter, a 1.5 GPM vandal resistant aerator, connecting wire to power converter and an inlet for a 1/2"[13] ball riser or supply hose. Also included are 4 'AA' batteries that provide battery backup power to the faucet during power outages. Sensor range is factory set for optimum performance.

NOTE: For Hardwire applications furnish P6900-HW6 power converter. The P6900-HW6 will power up to 8 sensor faucets. Order P6900-HW6 power converter seperately.

ZURN INDUSTRIES, INC. ♦ COMMERCIAL BRASS OPERATION ♦ 5900 ELWIN BUCHANAN DRIVE ♦ SANFORD NC 27330
Phone: 1-800-997-3876 ♦ Fax: 919-775-3541 ♦ World Wide Web: www.zurn.com
In Canada: ZURN INDUSTRIES LIMITED ♦ 3544 Nashua Drive ♦ Mississauga, Ontario L4V1L2 ♦ Phone: 905-405-8272 Fax: 905-405-1292

AquaSense® is a registered trademark of Zurn Industries, Inc.

Rev.
Dwg. No. 80689

Date: 6/9/04
Product No. Z6915

TYPICAL Z6915 AquaSense Battery Powered Faucet

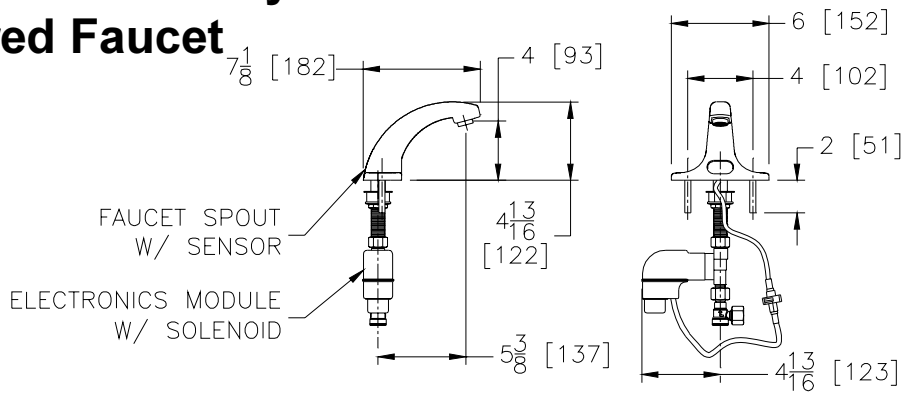

Optional Mixing Valves

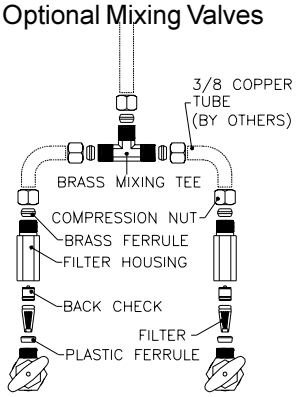

P6900-MT
Mixing Tee

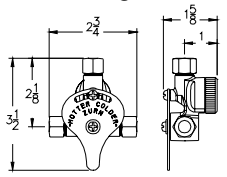

P6900-MV
Temperature Mixing Valve

TYPICAL Z6915-ACA AquaSense Plug-In Powered Faucet

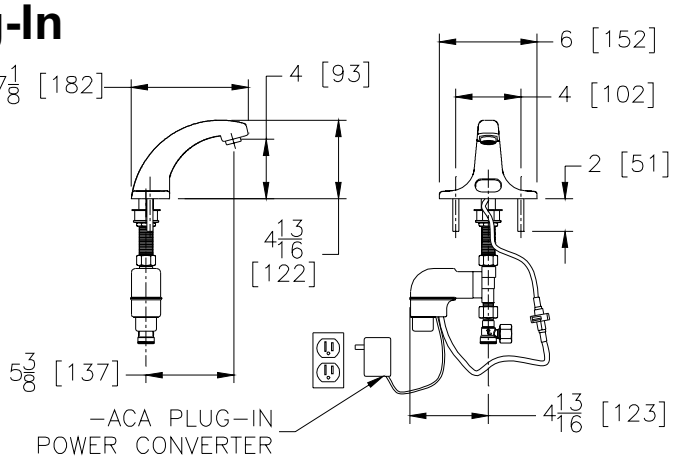

TYPICAL Z6915-CWB AquaSense Hardwire Powered Faucet

Optional:
* Optional -MJ mini junction box for connecting up to 8 faucets

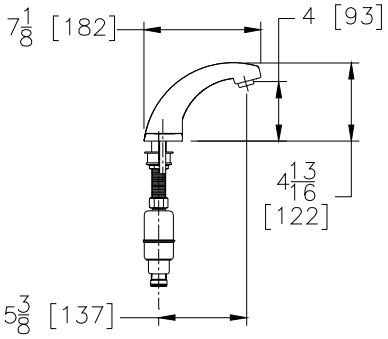

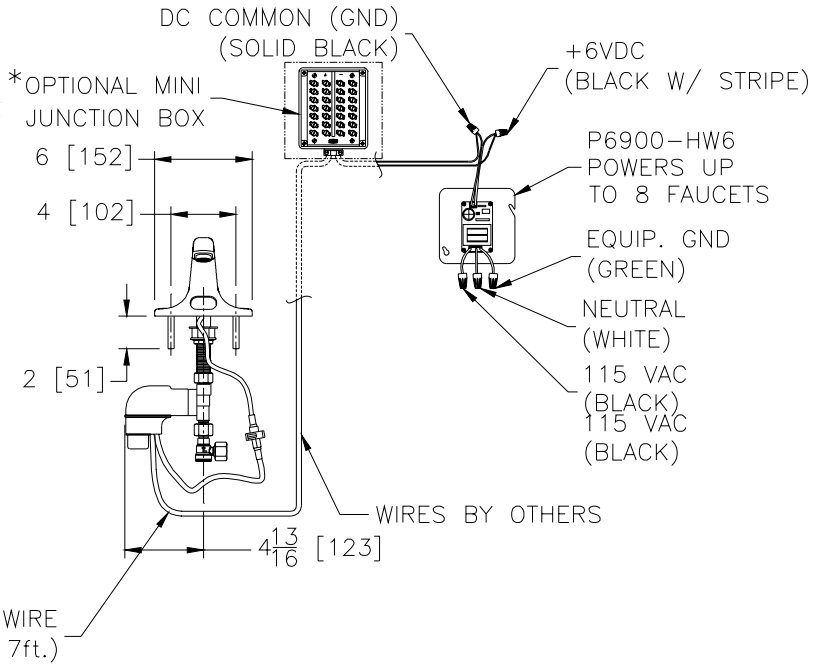

ZURN INDUSTRIES, INC. ♦ COMMERCIAL BRASS OPERATION ♦ 5900 ELWIN BUCHANAN DRIVE ♦ SANFORD NC 27330
Phone: 1-800-997-3876 ♦ Fax: 919-775-3541 ♦ World Wide Web: www.zurn.com
In Canada: ZURN INDUSTRIES LIMITED ♦ 3544 Nashua Drive ♦ Mississauga, Ontario L4V1L2 ♦ Phone: 905-405-8272 Fax: 905-405-1292

AquaSense® is a registered trademark of Zurn Industries, Inc.

RJS | BARBER ASSOCIATES

RJS | Barber Associates

Integrated Food Service Design

9/6/2013

ITEM# 17A - OVERSHELF-POT RACK W/SHELF (1 REQ'D)

Custom Fab CUSTOM

Shelf, table mounted, single deck, 12" wide, 96" long, stainless steel, uprights of shelf, mid-mounte Pot Rack, and Utensil Rack , circular design, 96" long, with 18 plated pot hooksd along with shelf to expand over table.

ADVANCE TABCO®
SMART FABRICATION™

MIX & MATCH
ADJUSTABLE COMPONENTS
Stainless Steel
SHELVING - POT RACK - UTENSIL RACK

Convert Your Table into a Effective Work Station!

Maximize Your Work Area!

Our TABLE with POT RACK, SHELVING & UTENSIL RACK

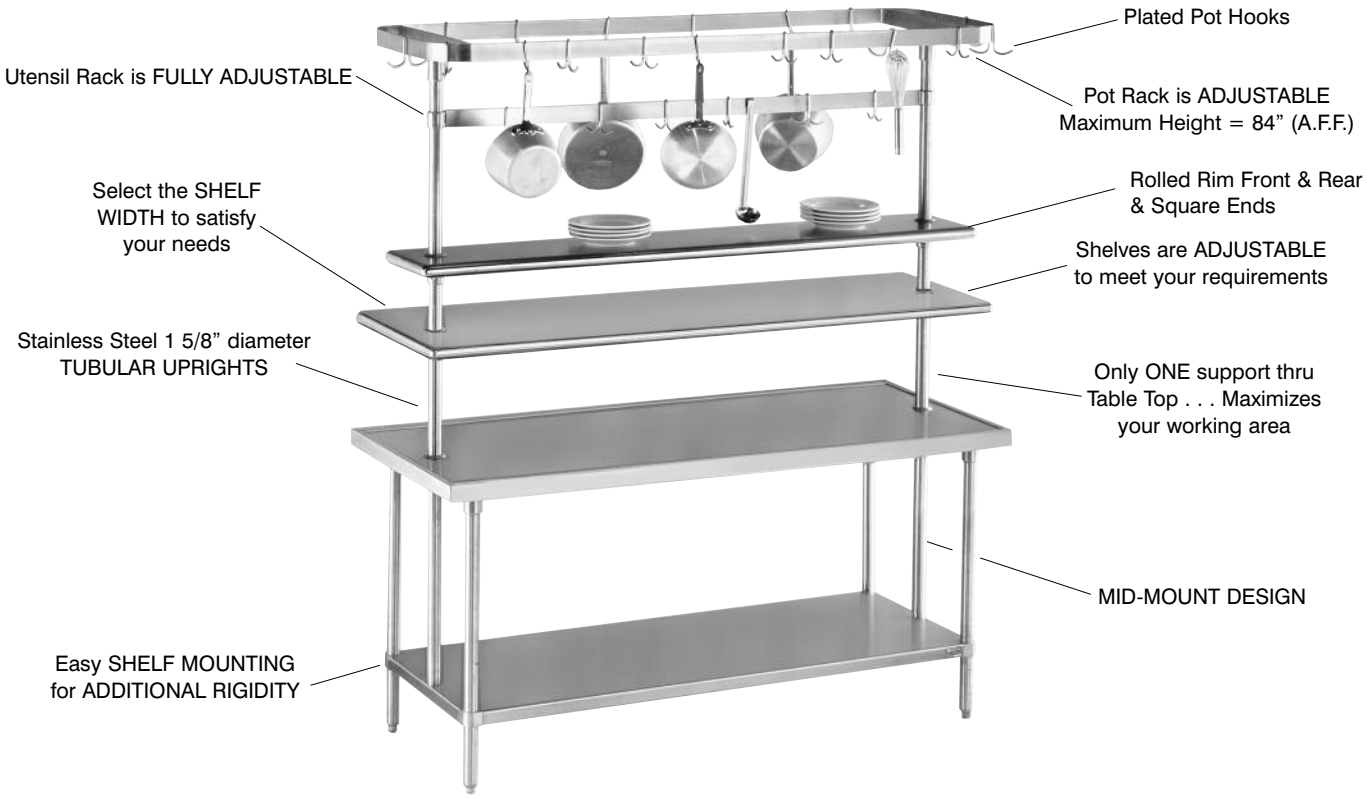

YES!!! . . . . it's ADJUSTABLE

Mix & Match . . . . . **your choice. We offer 3 basic components: SHELF - POT RACK - UTENSIL RACK.**

The Adjustable Solution **components are adjustable. You set the height to meet your demanding requirements.**

Focus on Function . . . . . **available in 4 shelf widths, 2 pot rack styles, 10 lengths, and 1 utensil rack series.**

ADVANCE TABCO®
SMART FABRICATION™
www.advancetabco.com

Customer Service Available To Assist You 1-800-645-3166 8:30 am - 8:00 pm E.S.T.
Email Orders To: customer@advancetabco.com. For Smart Fabrication™ Quotes, Email To: smartfab@advancetabco.com or Fax To: 631-586-2933

NEW YORK	GEORGIA	TEXAS	NEVADA
Fax: (631) 242-6900	Fax: (770) 775-5625	Fax: (972) 932-4795	Fax: (775) 972-1578

L-1

DESIGNED & CONSTRUCTED so as to be a Self-Contained Unit

Possible ADJUSTABLE Solutions for ALL Standard ADVANCE TABCO TAbles

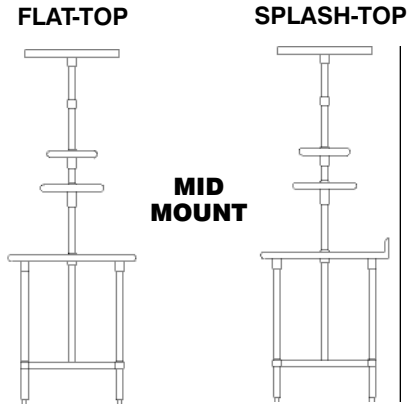

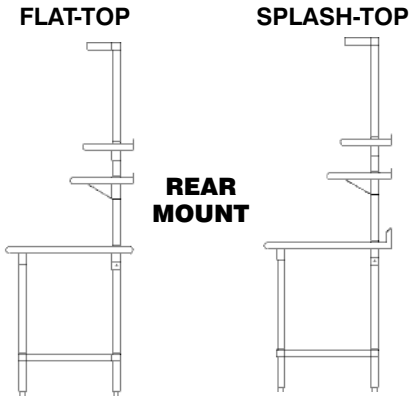

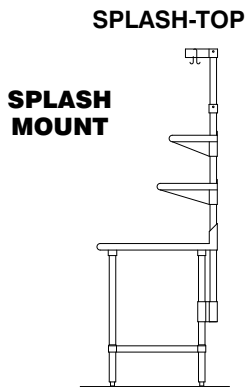

Also . . . . Adaptable to ALL ADVANCE TABCO
Open - Base (less undershelf) Units.

SHELF SPECIFICATIONS:

REAR MOUNT & SPLASH MOUNT DESIGN:

Shelves feature a 1 1/2" splash on rear edge.
Front edge has a rolled rim and square sides.

MID MOUNT DESIGN:

Shelves feature a rolled rim on front and rear & square sides.

TUBULAR UPRIGHT DIMENSIONS	
furnished with units requiring pot racks, shelves and utensil rack. (Dim. A.F.F.)	84"
furnished with units requiring ONLY shelving. (Dim. A.F.F.)	60"
furnished with units requiring field retrofit to include pot rack. Model TA-225 (ext. assembly)	24"
A.F.F. = Above Finished Floor.	

SINGLE POST DESIGN MAXIMIZES YOUR WORK AREA!

TABLE with OVERHEAD SHELVES

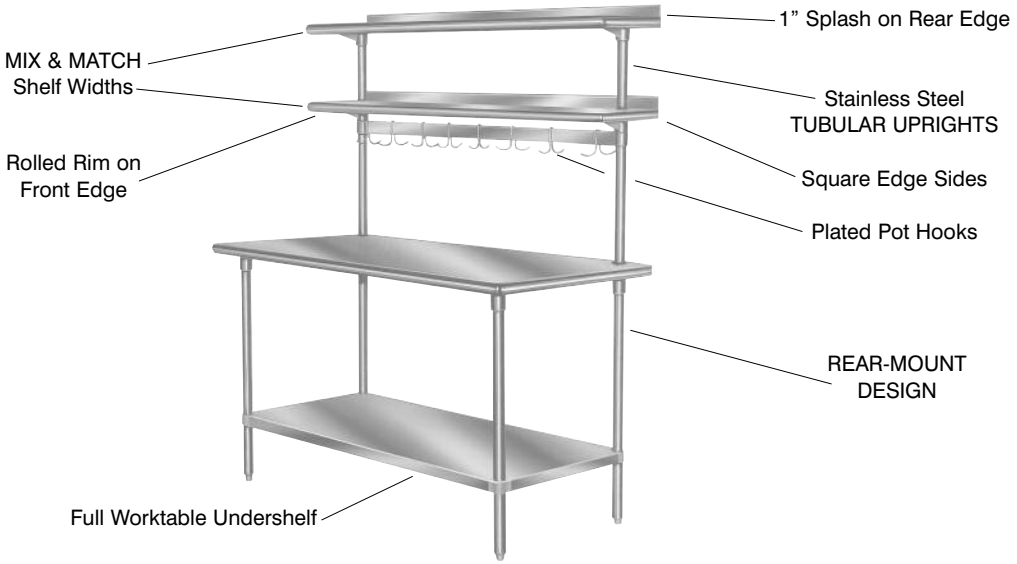

ADVANCE TABCO
SMART FABRICATION™

ADVANCE TABCO is constantly engaged in a program of improving our products. Therefore, we reserve the right to change specifications without prior notice.

200 Heartland Boulevard, Edgewood, NY 11717-8380
© ADVANCE TABCO, APRIL 2012

MODELS - DIMENSIONS - WEIGHTS

Choose a SHELF or SHELVES - POT RACK - UTENSIL RACK and one of the following Mounting Provisions:

TA-229 = REAR MOUNT
TA-228 = MID MOUNT
TA-227 = SPLASH MOUNT

NOTE: Adjustable utensil rack is always supplied when ordering POT RACK.

TA-225 = EXTENSION TUBE ASSEMBLY

FACTORY INSTALLATION REQUIRED OF MOUNTING ASSEMBLY.

SHELVING MODELS

WIDTH	Length	MID MT.	REAR MT.	SPLASH MT.	Est. Wt.
10”	36”	PT-10-36	PT-10R-36	PT-10S-36	12 lbs.
	48”	PT-10-48	PT-10R-48	PT-10S-48	14 lbs.
	60”	PT-10-60	PT-10R-60	PT-10S-60	17 lbs.
	72”	PT-10-72	PT-10R-72	PT-10S-72	19 lbs.
	84”	PT-10-84	PT-10R-84	PT-10S-84	22 lbs.
	96”	PT-10-96	PT-10R-96	PT-10S-96	26 lbs.
	108”	PT-10-108	PT-10R-108	PT-10S-108	28 lbs.
	120”	PT-10-120	PT-10R-120	PT-10S-120	31 lbs.
	132”	PT-10-132	PT-10R-132	PT-10S-132	35 lbs.
	144”	PT-10-144	PT-10R-144	PT-10S-144	38 lbs.
12”	36”	PT-12-36	PT-12R-36	PT-12S-36	13 lbs.
	48”	PT-12-48	PT-12R-48	PT-12S-48	15 lbs.
	60”	PT-12-60	PT-12R-60	PT-12S-60	18 lbs.
	72”	PT-12-72	PT-12R-72	PT-12S-72	20 lbs.
	84”	PT-12-84	PT-12R-84	PT-12S-84	23 lbs.
	96”	PT-12-96	PT-12R-96	PT-12S-96	27 lbs.
	108”	PT-12-108	PT-12R-108	PT-12S-108	29 lbs.
	120”	PT-12-120	PT-12R-120	PT-12S-120	32 lbs.
	132”	PT-12-132	PT-12R-132	PT-12S-132	36 lbs.
	144”	PT-12-144	PT-12R-144	PT-12S-144	39 lbs.
15”	36”	PT-15-36	PT-15R-36	PT-15S-36	15 lbs.
	48”	PT-15-48	PT-15R-48	PT-15S-48	17 lbs.
	60”	PT-15-60	PT-15R-60	PT-15S-60	20 lbs.
	72”	PT-15-72	PT-15R-72	PT-15S-72	22 lbs.
	84”	PT-15-84	PT-15R-84	PT-15S-84	25 lbs.
	96”	PT-15-96	PT-15R-96	PT-15S-96	29 lbs.
	108”	PT-15-108	PT-15R-108	PT-15S-108	31 lbs.
	120”	PT-15-120	PT-15R-120	PT-15S-120	34 lbs.
	132”	PT-15-132	PT-15R-132	PT-15S-132	38 lbs.
	144”	PT-15-144	PT-15R-144	PT-15S-144	41 lbs.
18”	36”	PT-18-36	PT-18R-36	PT-18S-36	17 lbs.
	48”	PT-18-48	PT-18R-48	PT-18S-48	19 lbs.
	60”	PT-18-60	PT-18R-60	PT-18S-60	22 lbs.
	72”	PT-18-72	PT-18R-72	PT-18S-72	24 lbs.
	84”	PT-18-84	PT-18R-84	PT-18S-84	27 lbs.
	96”	PT-18-96	PT-18R-96	PT-18S-96	31 lbs.
	108”	PT-18-108	PT-18R-108	PT-18S-108	33 lbs.
	120”	PT-18-120	PT-18R-120	PT-18S-120	36 lbs.
	132”	PT-18-132	PT-18R-132	PT-18S-132	40 lbs.
	144”	PT-18-144	PT-18R-144	PT-18S-144	43 lbs.

POT RACKS

(Includes Adjustable Utensil Rack & Pot Hooks)

SIZE	MID Mount	REAR Mount	SPLASH Mount	# of Hooks	Est. Wt.
36”	SCT-36	SWT-36	SWTB-36	12	30 lbs.
48”	SCT-48	SWT-48	SWTB-48	12	34 lbs.
60”	SCT-60	SWT-60	SWTB-60	18	37 lbs.
72”	SCT-72	SWT-72	SWTB-72	18	46 lbs.
84”	SCT-84	SWT-84	SWTB-84	18	50 lbs.
96”	SCT-96	SWT-96	SWTB-96	18	55 lbs.
108”	SCT-108	SWT-108	SWTB-108	18	60 lbs.
120”	SCT-120	SWT-120	SWTB-120	18	65 lbs.
132”	SCT-132	SWT-132	SWTB-132	18	68 lbs.
144”	SCT-144	SWT-144	SWTB-144	18	72 lbs.

NOTE: “SWT” and “AUR” models align with rear table legs and are 6” less than the nominal foot length.

UTENSIL RACKS

(Includes Pot Hooks)

SIZE	MODEL #	# of Hooks	Est. Wt.
36”	AUR-36	6	10 lbs.
48”	AUR-48	6	12 lbs.
60”	AUR-60	9	14 bs.
72”	AUR-72	9	16 lbs.
84”	AUR-84	9	18 lbs.
96”	AUR-96	9	20 lbs.
108”	AUR-108	9	22 lbs.
120”	AUR-120	9	24 lbs.
132”	AUR-132	9	26 lbs.
144”	AUR-144	9	28 lbs.

ADVANCE TABCO®
SMART FABRICATION™
www.advancetabco.com

Customer Service Available To Assist You 1-800-645-3166 8:30 am - 8:00 pm E.S.T.
Email Orders To: customer@advancetabco.com. For Smart Fabrication™ Quotes, Email To: smartfab@advancetabco.com or Fax To: 631-586-2933

NEW YORK Fax: (631) 242-6900
GEORGIA Fax: (770) 775-5625
TEXAS Fax: (972) 932-4795
NEVADA Fax: (775) 972-1578

SPECIFICATIONS

TABLE with SHELVES, POT RACK & UTENSIL RACK

MID-MOUNT INSTALLATION

REAR-MOUNT INSTALLATION

Suggested Heights an Typical Installations

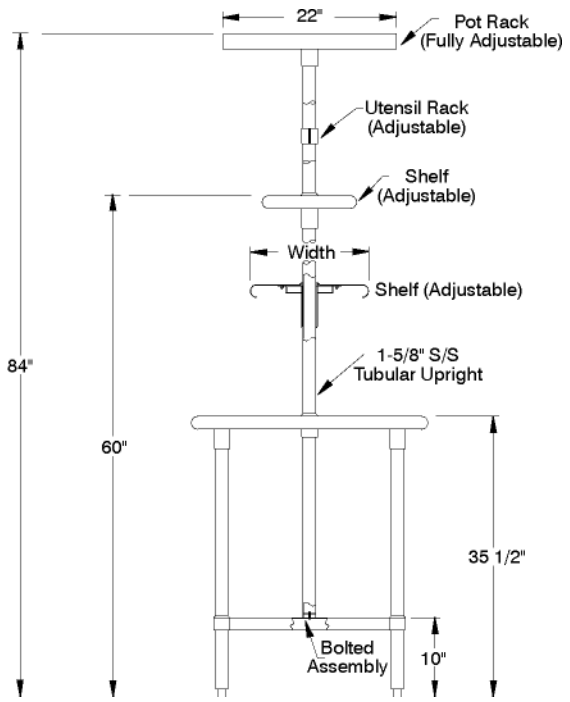

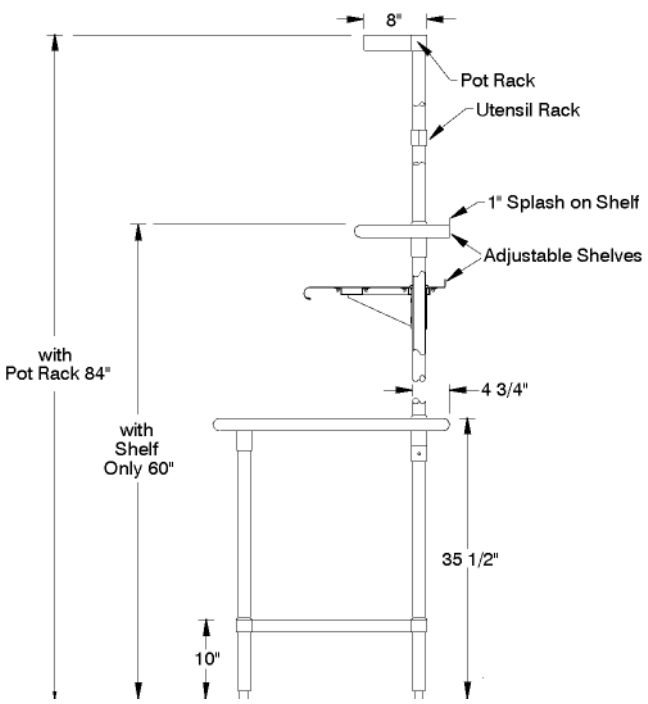

ALL DIMENSIONS ARE TYPICAL

A.F.F. = Above Finished Floor

Table Mounted Shelf Installation

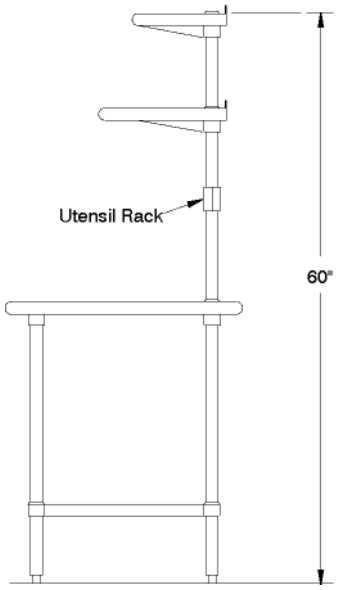

DESIGN:

SHELVES, POT & UTENSIL RACKS are adjustable along a single tubular upright at each and of the table.

Gusset type SET SCREW LOCKING MECHANISMS are employed to secure in place.

HAT SECTIONS and ANGLE BRACKETS, where required, are supplied to insure a rigid and level working surface.

MATERIAL:

SHELVES, POT & UTENSIL RACKS, HAT SECTION and GUSSETS are stainless steel.

SHELF DESIGN:

MID-MOUNTED SHELVING UNITS are furnished with a roll rim edge on front and rear sides.

REAR & SPLASH MOUNTED SHELVING UNITS are furnished with a roll rim edge in front. Ends are square edged formed downward and rear edge is turned up to form a rear splash.

CONSTRUCTION:

TIG welded with exposed areas polished to match adjacent surfaces.

Units originally supplied with OVERHEAD SHELVING can be adapted on the field to receive a POT RACK.

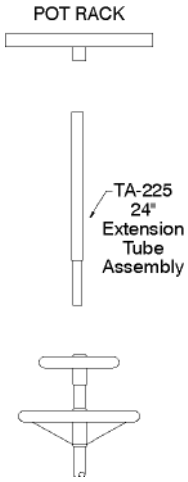

EXISTING UNIT

ADVANCE TABCO
SMART FABRICATION

ADVANCE TABCO is constantly engaged in a program of improving our products. Therefore, we reserve the right to change specifications without prior notice.

© ADVANCE TABCO, APRIL 2012

RJS | BARBER ASSOCIATES

RJS | Barber Associates

Integrated Food Service Design

9/6/2013

ITEM# 18 - PROOFER HOLDING CABINET (1 REQ'D)

Winston Industries HA4022

CVap® Holding Cabinet, full size, 22 cu. ft., electric differential control, 14 adjustable universal wire rack supports, field reversible door hinges, magnetic door handle, fanless, water fill operated manually, full-perimeter insulated, load limit 65 lbs (29.25 kg) per rack, includes: (2) locking & non-locking heavy duty non-marking casters, stainless steel construction, supplied with 84" power cord and plug, UL, cUL, UL Sanitation, NSF, ENERGY STAR®

ACCESSORIES

Mfr	Qty	Model	Spec
Winston Industries	1		One year limited warranty is standard (excluding gaskets, lamps, hoses, power cords, glass panels & evaporators) - See ZAP warranty agreement for full disclosure
Winston Industries	1		120v/60/1, 2112 watts, 17.6 amps, 20 MCA, (US) NEMA 5-20P
Winston Industries	1		Right-hand
Winston Industries	1		Window in both upper & lower front doors
Winston Industries	1		H3 3" swivel casters (2) with brakes

ELECTRICAL

	VOLTS	CYCLE	PHASE	CONN	AFF	NEMA	AMPS	KW	HP	MCA	MOCP
1	120	60	1	Cord & Plug		5-20P	17.6	2.112		20	

CVap A WINSTON INDUSTRIES INNOVATION Holding Cabinet

HA4022 CVAP® HOLDING CABINET

Exclusive Technology

Exclusive Controlled Vapor technology (U.S. patent # 5,494,690) establishes that the water vapor content in the cabinet is the same as that of the food. This unique process controls moisture evaporation and saturation, so crisp foods stay crisp, and moist foods stay moist.

Easy-to-Use Controls

Electronic differential controls are easy to understand and reliable. Never requires field calibration.
FOOD TEMP DIAL allows precise control of food temperature from 90 to 180° F (32 to 82° C).
FOOD TEXTURE DIAL maintains just-cooked texture with settings labeled proof, very moist, firm moist, and crisp.
No guesswork required.

Durable

Built to last with quality craftsmanship, high grade stainless steel construction and full insulation on top, sides and doors.

Better Control of Food Quality

Features full perimeter door gaskets, magnetic door handles, lift-off doors, removable side racks, and digital readout for water temperature.

Industry Compliant

CVap equipment complies with domestic and international requirements such as UL, C-UL, UL Sanitation, CE, MEA, and others.

This model has earned the ENERGY STAR®.

HA4022
CVAP® HOLDING CABINET
FULL SIZE MODEL, FANLESS
Electronic Differential Control

CVap® Holding Cabinets are designed for high quality holding of a wide variety of menu items for extended times. They can be used for proofing, holding, and serving.

WINSTON INDUSTRIES, LLC.
2345 Carton Drive | Louisville, KY 40299 USA | www.winstonindustries.com
Phone: 800.234.5286 | 1.502.495.5400 | Fax: 502.495.5458
Specifications subject to change without notice.

JOB

ITEM#

CVap®
A WINSTON INDUSTRIES INNOVATION

HA4022 CVAP HOLDING CABINET

FULL SIZE MODEL, FANLESS

Electronic differential control

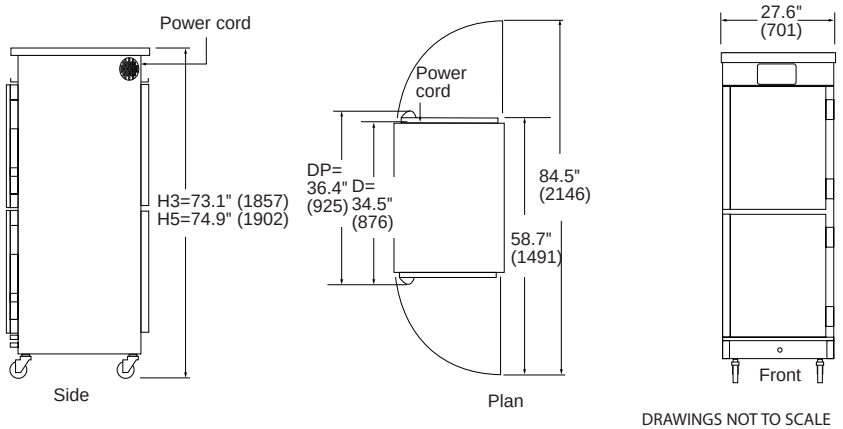

DRAWINGS NOT TO SCALE

capacity	size in (mm)	volts	hertz	ph	amps	watts	nema	ship wt. lb (kg)	ship cube
							US / CANADA		
14 SP 28 STP 14 GP 2/1	H3= 73.1" (1857) H5= 74.9" (1902) HT= 75.7" (1923) W= 27.6" (701) WT= 29.5" (749) D= 34.5" (876) DT= 37.6" (955) DP= 36.4" (925)	120	60	1	17.6	2112	US 5-20P† CAN 5-30P	365 (166)	60.0 (1.7)
							INTERNATIONAL		
		230*	50/60	1	9.2	2112	N/A	365 (166)	call factory

SP= Sheet pan (18" x 26" x 1.25") • STP= Steam table pan (12" x 20" x 2.5") • GP= Gastronorm pan • H3= Height w/3" casters • H5= Height w/5" casters
HT= Height w/transport or bumper guard • WT= Width w/transport or bumper guard • DT= Depth w/transport or bumper guard • DP= Depth w/pass thru

Short Form Specs

Shall be Winston CVap Holding Cabinet, model HA4022 with electronic A-Series differential controls to provide precise food temperature from 90 to 180° F (32 to 82° C) and maintain food texture with settings labeled proof, very moist, firm moist, and crisp. Utilizes Controlled Vapor Technology (patent #5,494,690) as a method and apparatus for holding hot foods, consisting of an air heater and water heater to establish ideal water vapor content that is in relation with the moistness characteristics for the food. Uniflo airflow design provides even heat distribution.

Construction

Materials: To be commercial and institutional grade stainless steel interior and exterior to provide ease of cleaning and long service life with reasonable use and care.

Rack Supports: Adjustable, normally spaced 3.5" (89 mm), to receive 14 sheet pans, 28 steam table pans, 14 2/1 gastronorm pans. Removable for easy cleaning.

Doors: Field reversible hinges to allow door lift off to facilitate cleaning. Magnetic door handles.

Casters: Includes two locking, two non-locking, heavy duty, non-marking.

Insulation: Full-perimeter.

Controller: Electronic differential control with dials labeled Food Temperature and Food Texture.

Water Fill: Operated manually. Low mineral potable water is recommended, otherwise use deionizer/demineralizer to minimize corrosive damage.

Ventilation: Allow 2" (51 mm) clearance on sides, particularly around ventilation holes. Install with supplied casters or legs. Refer to owner's manual for specific installation instructions. Generally this equipment doesn't need to be installed under a mechanical ventilation system (vent hood). Check local health and fire codes for requirements specific to your location.

Electrical: Supplied with 84" (2134 mm) (minimum) power cord and plug. †Tested in accordance with UL 197 at the rated voltage, hertz, and phase. The input average current did not exceed the allowable amperage for the circuit listed.

Load Limit: 65 lbs. (29.25 kg) per rack.

Warranty

Limited 1 year warranty (excluding gaskets, lamps, hoses, power cords, glass panels, and evaporators). Warranty disclaimer for failure to clean. Ask for complete warranty disclosure.

Specify the following when ordering:

Standard (No additional cost):

1. Hinge preference: Left or right.
2. Wheel/Casters/Leg preference: Choice of 3" (76 mm) casters, 4" (102 mm) legs, or 6" (152 mm) legs.

*Inquire about additional international voltages available.

Optional (Additional cost):

1. Casters: 5" (127 mm) casters.
2. Window: Window in doors.
3. Pass thru: Second pair of doors on back of cabinet.
4. Pass thru/Window: Second pair of doors on back of cabinet, windows in all doors.
5. Bumper Guard: Full-perimeter bumpers with 5" (127 mm) casters (2 locking, 2 non-locking).
6. Transport: Adds bumper guard base, cord wrap, evaporator cover, and push/pull handles.
7. Solid rack supports: Solid stainless steel rack supports (replaces standard wire rack supports).
8. Automatic water fill system.
9. Extended Warranty: Adds parts and labor warranty coverage for one additional year.
10. Any added options or accessories.

Accessories & Supplies (additional cost)

PS2192/12	Scale Kleen™ packets (12 - pack)
PS2206/4	Wire rack/tray (4 - pack)
PS2553	8.5" (216 mm) Top cover extension
PS2351	11" (279 mm) Top cover extension
PS2696	Mobile water removal system

BUY WINSTON SERVICE PARTS, ACCESSORIES, AND SUPPLIES ONLINE!

Factory direct at www.winstonindustries.com

WINSTON INDUSTRIES, LLC.
2345 Carton Drive | Louisville, KY 40299 USA
Phone: 800.234.5286 | 502.495.5400 | Fax: 502.495.5458 | www.winstonindustries.com
Specifications subject to change without notice.

Copyright © 2011 | Printed in USA.

4272v026 rev23 | pm 12.23.10

RJS | BARBER ASSOCIATES

RJS | Barber Associates

Integrated Food Service Design

9/6/2013

ITEM# 19 - CONVECTION OVEN (1 REQ'D)

Blodgett Oven DFG100 SINGLE

Convection Oven, gas, single-deck, standard depth, solid state manual control with digital timer, 2-speed fan, (5) racks & (11) positions, interior light, simultaneous operated doors with glass, stainless steel front, sides & top, 25" stainless steel legs, 55,000 BTU, cETL, NSF, CE, ENERGY STAR®

ACCESSORIES

Mfr	Qty	Model	Spec
Blodgett Oven	1		(2) year parts, (1) year labor warranty and (3) additional year door warranty (parts only), standard
Blodgett Oven	1		Gas type to be determined
Blodgett Oven	1		115v/60/1-ph, 6.0 amps, 3-wire w/ground, 6' cord, plug, NEMA 5-15P, 1/3 hp, standard
Blodgett Oven	1		Standard Controls: Solid-State manual controls with digital timer
Blodgett Oven	1		Draft diverter or Draft hood must be selected below
Blodgett Oven	1		6" stainless steel legs (set), replacement/extra

ELECTRICAL

	VOLTS	CYCLE	PHASE	CONN	AFF	NEMA	AMPS	KW	HP	MCA	MOCP
1	(2)115	(2)60	(2)1	Cord & Plug			(2)6		(2)1/3		

GAS

	SIZE	MBTU	KW
1	(2)3/4"	(2)55.0	

STEAM

	INLET SIZE	RETURN SIZE	LB/HR	PSIG (min)	PSIG (max)
1					

BLODGETT®

Project _____

Item No. _____

Quantity _____

DFG-100

MODEL DFG-100

Full-Size Dual Flow Gas Convection Oven

Standard depth baking compartment - accepts five 18” x 26” standard full-size baking pans in left-to-right positions.
All data is shown per oven section, unless otherwise indicated.

Refer to operator manual specification chart for listed model names.

EXTERIOR CONSTRUCTION

- Full angle-iron frame
- Stainless steel front, top, and sides
- Dual pane thermal glass windows encased in stainless steel door frames
- Porcelain door handle with simultaneous door operation
- Triple-mounted pressure lock door design with turnbuckle assembly
- Modular slide out front control panel for easy cleaning
- Solid mineral fiber insulation at top, back, sides and bottom

INTERIOR CONSTRUCTION

- Double-sided porcelainized baking compartment liner (14 gauge)
- Aluminized steel combustion chamber
- Dual inlet blower wheel
- Five chrome-plated racks, eleven rack positions with a minimum of 1-5/8” (41mm) spacing
- Interior lights

OPERATION

- Dual Flow Gas system combines direct and indirect heat
- Electronic spark ignition control system
- Removable dual tube burners
- Pressure regulator
- Manual gas service cut-off switch located on the front of the control panel
- Air mixers with adjustable air shutters
- Solid state thermostat with temperature control range of 200°F (93°C) to 500°F (260°C)
- Two speed fan motor (single speed in CE model)
- 1/3 horsepower blower motor with automatic thermal overload protection
- Control area cooling fan
- Two 50 watt commercial bake oven lamps

STANDARD FEATURES

- Solid state manual control with digital timer
- 25” (635mm) adjustable stainless steel legs (for single units)
- 6” (152mm) adjustable stainless steel legs (for double sections)
- Draft diverter or draft hood for venting (select one)
- Two year parts and one year labor warranty
- Five year limited oven door warranty*

* *For all international markets, contact your local distributor.*

OPTIONS AND ACCESSORIES

(AT ADDITIONAL CHARGE)

- **Legs/casters/stands:**
  - ❑ 6” (152mm) seismic legs
  - ❑ 6” (152mm) casters
  - ❑ 4” (102mm) low profile casters (double only)
  - ❑ 25” (635mm) stainless steel open stand with rack guides
- **Controls:**
  - ❑ Solid state digital control with LED display, cook and hold, and Pulse Plus®
  - ❑ Blodgett IQ2™ multi-stage programmable control
  - ❑ SmartTouch touchscreen control allows cooking with timer and core probe simultaneously. Includes shelf timing, cooking compensation and multi-shelf recipes. Holds up to 255 recipes.
- **Gas hose w/quick disconnect restraining device:**
  - ❑ 48” (1219mm) hose
  - ❑ 36” (914mm) hose
- ❑ Black glass door with one piece curved stainless steel door handle. Inner glass is removeable for easy cleaning between the panes.
- ❑ Controls on the left side
- ❑ Stainless steel oven liner
- ❑ Extra oven racks
- ❑ Stainless steel solid back panel
- ❑ Gas manifold (for double sections)
- ❑ Prison package (includes security control panel and stainless steel back)
- ❑ Security control panel
- ❑ Flue connector

OPTIONS AND ACCESSORIES

(AT NO CHARGE)

- ❑ Solid stainless steel doors

Intertek

BLODGETT OVEN COMPANY
www.blodgett.com
44 Lakeside Avenue, Burlington, VT 05401
Phone: (802) 658-6600 • Fax: (802) 864-0183

BLODGETT®

MODEL DFG-100

APPROVAL/STAMP

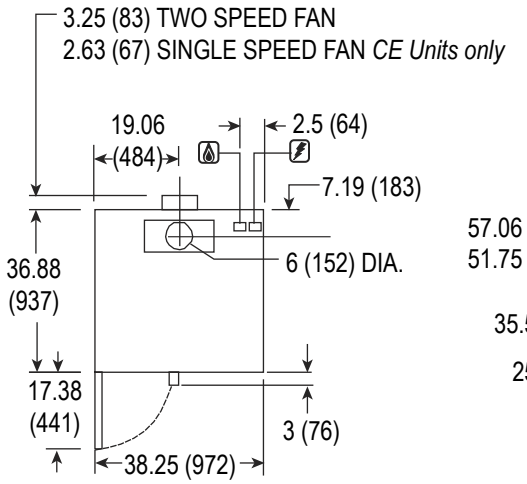

TOP VIEW

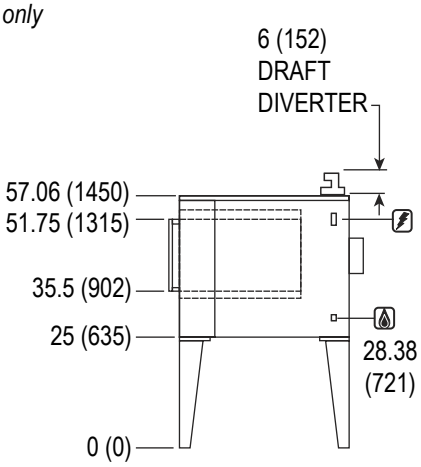

SINGLE

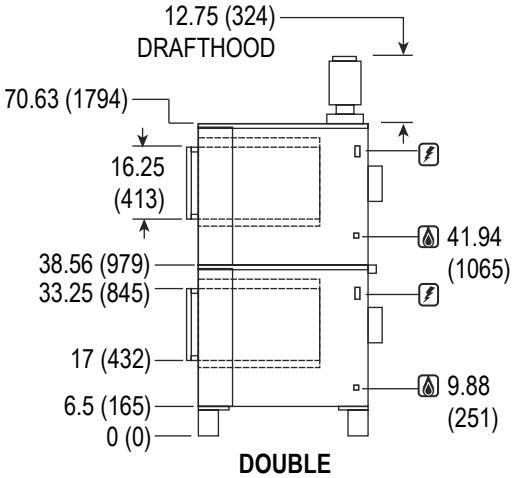

DOUBLE

DIMENSIONS ARE IN INCHES (MM)

SHORT FORM SPECIFICATIONS

Provide Blodgett full-size convection oven model DFG-I00, (single/double) compartment. Each compartment shall have (porcelainized/stainless) steel liner and shall accept five I8" x 26" standard full-size bake pans. Stainless steel front, top and sides. Doors shall be (solid stainless steel/ have dual pane thermal glass windows) with single porcelain handle and simultaneous operation. Unit shall be gas heated with electronic spark ignition and shall cook by means of a dual-flow system combining direct and indirect heat with a gas shutoff switch on the front of the control panel. Air in baking chamber distributed by dual inlet blower wheel powered by a two-speed (single speed for CE model), 1/3 HP motor with thermal overload protection. Each chamber shall be fitted with two commercial lamps and five chrome-plated removable racks. Control panel shall be recessed with Cook/Cool Down mode selector, solid state (manual/ digital) infinite thermostat (200- 500°F), and 60-minute timer. Provide two years parts and one year labor warranty. Provide options and accessories as indicated.

DIMENSIONS:

Floor space	38-1/4" (972mm) W x 36-7/8" (937mm) D
Product clearance	
Oven Back	0" from combustible and non-combustible construction.
Oven Sides	2" from combustible and non-combustible construction.
Interior	29" (737mm) W x 20" (508mm) H x 24-1/4" (616mm) D
If oven is on casters:	
Single	Add 4-1/2" (114mm) to all height dimensions
Double	Height dimensions remain the same
Double Low Profile	Subtract 2.5" (64mm) from all height dimensions

GAS SUPPLY:

3/4" NPT

Manifold Pressure:

- Natural – 3.5" W.C
- Propane – 10" W.C.

Inlet Pressure:

- Natural – 7.0" W.C. min. – 10.5" W.C. max.
- Propane – 11.0" W.C. min. – 13.0" W.C. max.

MAXIMUM INPUT:

Single	55,000 BTU/hr (16.2 Kw)
Double	110,000 BTU/hr (32.4 Kw)

POWER SUPPLY:

115 VAC, 1 phase, 6 Amp, 60 Hz., 2-wire with ground, 1/3 H.P., 2 speed motor, 1140 and 1725 RPM

230V CE model, 1 phase, 3 Amp, 50 Hz., 2-wire with ground, 1/3 H.P., 1 speed motor, 1425 RPM

6' (1.8m) electric cord set furnished on 115 VAC ovens only.

Blodgett recommends a Pass & Seymour, model 2095, GFCI for this oven.

MINIMUM ENTRY CLEARANCE:

Uncrated	32-1/16" (814mm)
Crated	37-1/2" (953mm)

SHIPPING INFORMATION:

Approx. Weight:

Single	590 lbs. (268 kg)
Double	1095 lbs. (497 kg)

Crate sizes:

37-1/2" (952mm) x 43-1/2" (1105mm) x 51-3/4" (1315mm)

NOTE: *The company reserves the right to make substitutions of components without prior notice*

BLODGETT OVEN COMPANY
www.blodgett.com
44 Lakeside Avenue, Burlington, VT 05401 • Phone: (802) 658-6600 • Fax: (802) 864-0183

Printed in U.S.A. **NOTE:** FOR COMMERCIAL USE ONLY P/N 35023 Rev Z (8/12)

RJS | BARBER ASSOCIATES

RJS | Barber Associates

Integrated Food Service Design

9/6/2013

ITEM# 19 - CONVECTION OVEN (1 REQ'D)

Blodgett Oven DFG100 SINGLE

Convection Oven, gas, single-deck, standard depth, - EXISTING CONVECTION OVEN TO BE RELOCATED TO NEW LOCATION AND USED AS THE BOTTOM SECTION FOR THE ADDITIONAL ITEM#19 OVEN BEING PURCHASED TO MAKE ONE DOUBLE STACKED CONVECTION ON CASTERS

<Existing>

ELECTRICAL

	VOLTS	CYCLE	PHASE	CONN	AFF	NEMA	AMPS	KW	HP	MCA	MOCP
1	(2)115	(2)60	(2)1	Cord & Plug			(2)6		(2)1/3		

GAS

	SIZE	MBTU	KW
1	(2)3/4"	(2)55.0	

STEAM

	INLET SIZE	RETURN SIZE	LB/HR	PSIG (min)	PSIG (max)
1					

BLODGETT®

Project _____

Item No. _____

Quantity _____

DFG-100

MODEL DFG-100

Full-Size Dual Flow Gas Convection Oven

Standard depth baking compartment - accepts five 18” x 26” standard full-size baking pans in left-to-right positions.
All data is shown per oven section, unless otherwise indicated.

Refer to operator manual specification chart for listed model names.

EXTERIOR CONSTRUCTION

- Full angle-iron frame
- Stainless steel front, top, and sides
- Dual pane thermal glass windows encased in stainless steel door frames
- Porcelain door handle with simultaneous door operation
- Triple-mounted pressure lock door design with turnbuckle assembly
- Modular slide out front control panel for easy cleaning
- Solid mineral fiber insulation at top, back, sides and bottom

INTERIOR CONSTRUCTION

- Double-sided porcelainized baking compartment liner (14 gauge)
- Aluminized steel combustion chamber
- Dual inlet blower wheel
- Five chrome-plated racks, eleven rack positions with a minimum of 1-5/8” (41mm) spacing
- Interior lights

OPERATION

- Dual Flow Gas system combines direct and indirect heat
- Electronic spark ignition control system
- Removable dual tube burners
- Pressure regulator
- Manual gas service cut-off switch located on the front of the control panel
- Air mixers with adjustable air shutters
- Solid state thermostat with temperature control range of 200°F (93°C) to 500°F (260°C)
- Two speed fan motor (single speed in CE model)
- 1/3 horsepower blower motor with automatic thermal overload protection
- Control area cooling fan
- Two 50 watt commercial bake oven lamps

STANDARD FEATURES

- Solid state manual control with digital timer
- 25” (635mm) adjustable stainless steel legs (for single units)
- 6” (152mm) adjustable stainless steel legs (for double sections)
- Draft diverter or draft hood for venting (select one)
- Two year parts and one year labor warranty
- Five year limited oven door warranty*

* *For all international markets, contact your local distributor.*

OPTIONS AND ACCESSORIES

(AT ADDITIONAL CHARGE)

- **Legs/casters/stands:**
  - ❑ 6” (152mm) seismic legs
  - ❑ 6” (152mm) casters
  - ❑ 4” (102mm) low profile casters (double only)
  - ❑ 25” (635mm) stainless steel open stand with rack guides
- **Controls:**
  - ❑ Solid state digital control with LED display, cook and hold, and Pulse Plus®
  - ❑ Blodgett IQ2™ multi-stage programmable control
  - ❑ SmartTouch touchscreen control allows cooking with timer and core probe simultaneously. Includes shelf timing, cooking compensation and multi-shelf recipes. Holds up to 255 recipes.
- **Gas hose w/quick disconnect restraining device:**
  - ❑ 48” (1219mm) hose
  - ❑ 36” (914mm) hose
- ❑ Black glass door with one piece curved stainless steel door handle. Inner glass is removeable for easy cleaning between the panes.
- ❑ Controls on the left side
- ❑ Stainless steel oven liner
- ❑ Extra oven racks
- ❑ Stainless steel solid back panel
- ❑ Gas manifold (for double sections)
- ❑ Prison package (includes security control panel and stainless steel back)
- ❑ Security control panel
- ❑ Flue connector

OPTIONS AND ACCESSORIES

(AT NO CHARGE)

- ❑ Solid stainless steel doors

BLODGETT OVEN COMPANY
www.blodgett.com
44 Lakeside Avenue, Burlington, VT 05401
Phone: (802) 658-6600 • Fax: (802) 864-0183

BLODGETT®

MODEL DFG-100

APPROVAL/STAMP

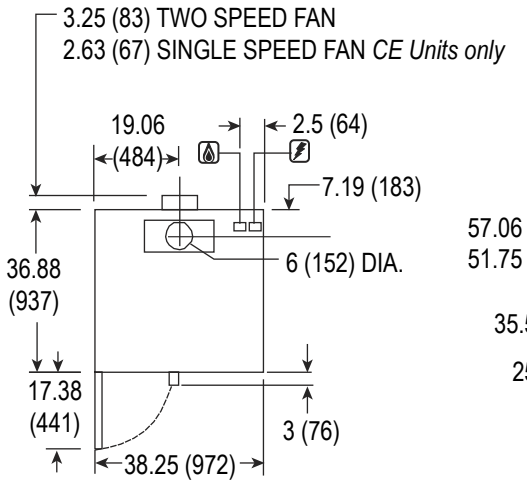

TOP VIEW

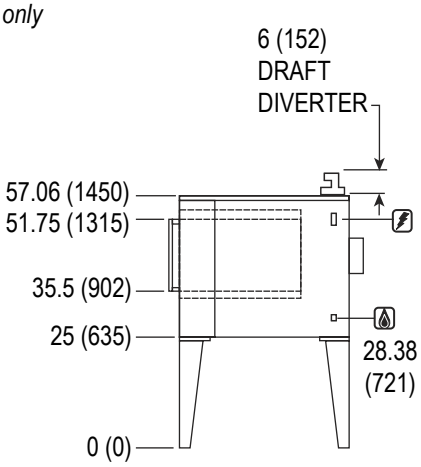

SINGLE

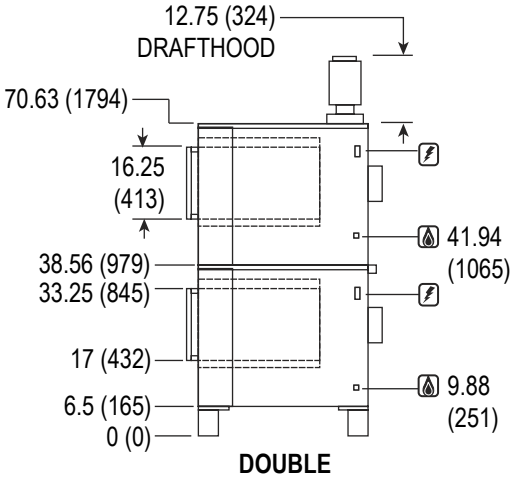

DOUBLE

DIMENSIONS ARE IN INCHES (MM)

SHORT FORM SPECIFICATIONS

Provide Blodgett full-size convection oven model DFG-I00, (single/double) compartment. Each compartment shall have (porcelainized/stainless) steel liner and shall accept five I8" x 26" standard full-size bake pans. Stainless steel front, top and sides. Doors shall be (solid stainless steel/ have dual pane thermal glass windows) with single porcelain handle and simultaneous operation. Unit shall be gas heated with electronic spark ignition and shall cook by means of a dual-flow system combining direct and indirect heat with a gas shutoff switch on the front of the control panel. Air in baking chamber distributed by dual inlet blower wheel powered by a two-speed (single speed for CE model), 1/3 HP motor with thermal overload protection. Each chamber shall be fitted with two commercial lamps and five chrome-plated removable racks. Control panel shall be recessed with Cook/Cool Down mode selector, solid state (manual/ digital) infinite thermostat (200- 500°F), and 60-minute timer. Provide two years parts and one year labor warranty. Provide options and accessories as indicated.

DIMENSIONS:

Floor space	38-1/4" (972mm) W x 36-7/8" (937mm) D
Product clearance	
Oven Back	0" from combustible and non-combustible construction.
Oven Sides	2" from combustible and non-combustible construction.
Interior	29" (737mm) W x 20" (508mm) H x 24-1/4" (616mm) D
If oven is on casters:	
Single	Add 4-1/2" (114mm) to all height dimensions
Double	Height dimensions remain the same
Double Low Profile	Subtract 2.5" (64mm) from all height dimensions

GAS SUPPLY:

3/4" NPT

Manifold Pressure:

- Natural – 3.5" W.C
- Propane – 10" W.C.

Inlet Pressure:

- Natural – 7.0" W.C. min. – 10.5" W.C. max.
- Propane – 11.0" W.C. min. – 13.0" W.C. max.

MAXIMUM INPUT:

Single	55,000 BTU/hr (16.2 Kw)
Double	110,000 BTU/hr (32.4 Kw)

POWER SUPPLY:

115 VAC, 1 phase, 6 Amp, 60 Hz., 2-wire with ground, 1/3 H.P., 2 speed motor, 1140 and 1725 RPM

230V CE model, 1 phase, 3 Amp, 50 Hz., 2-wire with ground, 1/3 H.P., 1 speed motor, 1425 RPM

6' (1.8m) electric cord set furnished on 115 VAC ovens only.

Blodgett recommends a Pass & Seymour, model 2095, GFCI for this oven.

MINIMUM ENTRY CLEARANCE:

Uncrated	32-1/16" (814mm)
Crated	37-1/2" (953mm)

SHIPPING INFORMATION:

Approx. Weight:

Single	590 lbs. (268 kg)
Double	1095 lbs. (497 kg)

Crate sizes:

37-1/2" (952mm) x 43-1/2" (1105mm) x 51-3/4" (1315mm)

NOTE: *The company reserves the right to make substitutions of components without prior notice*

BLODGETT OVEN COMPANY
www.blodgett.com
44 Lakeside Avenue, Burlington, VT 05401 • Phone: (802) 658-6600 • Fax: (802) 864-0183

Printed in U.S.A. **NOTE:** FOR COMMERCIAL USE ONLY P/N 35023 Rev Z (8/12)

RJS | BARBER ASSOCIATES

RJS | Barber Associates

Integrated Food Service Design

9/6/2013

ITEM# 19A - SAFETY SYSTEM MOVEABLE GAS CONNECTOR (2 REQ'D)

Dormont Manufacturing 1675KIT2S48PS

Safety System Moveable Gas Connector Kit, 3/4" inside dia., 48" long, covered with stainless steel braid, coated with blue antimicrobial PVC, 1 SnapFast™ QD, 2 SwivelMAX™, 1 full port valve, 1 pair Safety-Set™ with adhesive foam tape and hardware mounting options, coiled restraining cable with hardware, limited lifetime warranty

RJS | BARBER ASSOCIATES

RJS | Barber Associates

Integrated Food Service Design

9/6/2013

ITEM# 20-22 -

<Spare>

RJS | BARBER ASSOCIATES

RJS | Barber Associates

Integrated Food Service Design

9/6/2013

ITEM# 23 - BOILERLESS STEAMER (1 REQ'D)

Groen (2)SSB-5GF

SmartSteam™ 100 Convection Steamer, gas, double-stacked, open leg stand bullet feet, (5) 12 x 20 x 2-1/2" pans capacity per compartment, boilerless, door, stainless steel interior & exterior, single water connection, 62,000 BTU each

ACCESSORIES

Mfr	Qty	Model	Spec
Groen	1		(2) year parts & labor, (5) year cavity warranty, standard
Groen	1	149100	SmartSteam™ water treatment kit
Groen	1		Gas type to be specified
Groen	1	ELEV0-2000	For elevation between 0 and 2000 (When order is placed, all equipment with elevation specified will be assigned a different Part# by the factory)
Groen	1		Door hinged on left, std.
Groen	1	098611	Casters, set of (4), (2) locking, for stands

ELECTRICAL

	VOLTS	CYCLE	PHASE	CONN	AFF	NEMA	AMPS	KW	HP	MCA	MOCP
1	115	60	1				15.0				

GAS

	SIZE	MBTU	KW
1	(2) 1/2"	(2) 62.0	

STEAM

	INLET SIZE	RETURN SIZE	LB/HR	PSIG (min)	PSIG (max)
1					

WATER

	HOT SIZE	HOT AFF	HOT GPH	COLD SIZE	COLD AFF	FILTERED SIZE	FILTERED AFF	CONDENSER INLET SIZE	CONDENSER OUTLET SIZE
1				3/4"					

WASTE

	INDIRECT SIZE	DIRECT SIZE
1	2-1/2"	

SmartSteam100 Boilerless Steamer model (2)SSB-5GF

10-Pan Boilerless Convection Steamer (5 pans per cavity)

Double-Stacked, Stand-Mounted, Stainless Steel, Self-Contained, Gas Heated

Short Form (2)SSB-5GF
Steamer shall be a Groen double-stacked SmartSteam100™ Boilerless Convection Steamer Model (2)SSB-5GF. Each steamer cavity shall have a self-contained, atmospheric, gas-heated steam generating reservoir. Construction shall be all stainless steel. Cavities shall have powerful side-mounted blowers to circulate steam. Standard operating controls shall include: an on-off rocker switch; electronic timer, with continuous steam, timed steam and stop buttons; READY light. Doors shall be field-reversible and shall be equipped with an easy-open latch and hidden magnetic door switch. The atmospheric steam generating reservoirs shall not require a pressure gauges or switches; shall have an automatic drain and shall have an infrared burner with 62,000 BTU/hr of heating capacity per cavity. Steamer shall come up to READY in 15 minutes from a cold start and shall provide warm cavity, instant steam capability. Gas, electric, water and drain connections shall conform to instructions provided on the back side of this sheet. CSA design-certified and NSF listed. Made in the USA.

Description
Steamer shall be a Groen Model (2)SSB-5GF double-stacked SmartSteam100™ stainless steel, boilerless, convection steamer. Each steamer shall have a self-contained atmospheric 62,000 BTU/hr gas steam generating reservoir.

Construction
Steamer cavity, cabinet and stand shall be all stainless steel construction, with removable right and left-side panels, providing access to internal components. Steamer shall have no side vents for increased water/spray resistance.

Steamer doors shall be all stainless steel with a strong continuous hinge and field-reversible for left or right swing. Doors shall be insulated and provided with a one-piece, replaceable seal. Easy-open door handles and latches shall provide positive lock and seal when doors are pushed or slammed shut.

A hidden magnetic door switch shall cut power to blower fan and shut down power to the steam generating reservoir when the door is opened. Pan support racks shall be stainless steel and removable for easy cleaning. A stainless steel condensate collection tray shall be positioned under each cavity door.

Finish
Cabinet exterior, including door, shall be a #3 uniform finish. Cavity interior shall be polished stainless steel. Control panel face plate shall be smudge-resistant polyester film, ensuring maximum ease in cleaning and maintenance of an attractive appearance.

CSA Listing
Steamer shall be CSA (formerly CGA) design certified.

Sanitation
Steamer shall be designed and manufactured to meet NSF requirements and all known health codes. Steamer shall be NSF listed.

Controls
Steamer controls shall include an on-off rocker switch; electronic timer, with continuous steam, timed steam and stop buttons; READY light which indicates when cavity is warm and ready for steaming.

Performance Features
Steamer cavities shall have powerful, side-mounted blowers to increase steam velocity and provide efficient steam distribution throughout the cavity and between loaded pans. Steam generators shall deliver 12,400 BTU/hr of power input per 2-1/2" deep steam pan. Steamer shall have a steam lid positioned over each steam generating reservoir to ensure that adding/removing food does not lower the cavity or water temperature.

Heat up time to READY shall typically be 15 minutes or less. Cavity is kept warm and ready for instant steam between loads. No cavity warm up required after READY light comes on.

Model (2)SSB-5EF shown

Atmospheric Steam Generating Reservoir
Each steamer shall have a gas-heated steam generating reservoir to provide atmospheric steam to the cavity at a temperature of approximately 212° F. The high-efficiency steam generating reservoirs shall have water level sensors. Gas heaters shall have infrared burners with a firing rate of 62,000 BTU/hr.

Acidic products and other commercial chemicals shall not be used to clean the steamer. A daily wipe down of the steamer cavity, steam lid and floats is sufficient to maintain optimal operation of the steamer. However, Groen Descaler or approved equal may be required.

Pan Capacity

Pan Size	Per Cavity	Total
12 x 20 x 1"	10	20
12 x 20 x 2 1/2"	5	10
12 x 20 x 4"	3	6

Installation
Steamer shall require natural or propane (specify) gas service via a ½" NPT gas supply line, or approved equivalent. Steamer shall be connected to a ¾" NH cold water supply line and a 2-1/2" free venting drain. Steamer shall require two 115 Volt, single-phase electrical service connections.

Water Supply Requirements
Steamer must be connected to an on-site water supply. Water supply at 30 to 60 PSIG with flow at .75 - 1.5 GPM per cavity.

Options/Accessories
- ☐ Flanged Foot Kit (for support stand)
- ☐ Caster Kit (for support stand)
- ☐ High Altitude Kit (above 2000', specify)
- ☐ Heat Shield Kits

Origin of Manufacture
Steamer shall be designed and manufactured in the U.S.A.

Applications
Pasta
Rice
Vegetables (Fresh & Frozen)
Seafood (Fresh & Frozen)
Poultry
Potatoes
Eggs
Meats
Reheat Cook-Chill & Prepared Foods

1055 Mendell Davis Drive, Jackson, MS 39272
888-994-7636, unifiedbrands.net
Please reference our website for the most updated product information and specifications.

groen

Model (2)SSB-5GF

P/N 145244 REV E

SERVICE CONNECTIONS & NOTES:

1. DRAIN CONNECTION: 2-1/2" [64] TUBE (DRAIN FREE VENTING). DO NOT CONNECT DIRECTLY TO DRAIN. ALLOW A 2" AIR GAP
2. GAS CONNECTION: 1/2" FPT GAS SYSTEM MUST DELIVER 124,000 BTU'S MINIMUM AT UNIT.
3. WATER SUPPLY: 3/4" MALE HOSE CONNECTION 30 TO 60 PSIG WITH A FLOW RATE OF 1.50-3.00 GPM. PRESSURE REGULATION IS REQ'D FOR WATER PRESSURE OVER 60 PSI. DO NOT USE TREATED WATER.
4. ELECTRICAL CONNECTION: 120VAC, 60Hz, 15AMP CONDUIT SIZE: 13/16" HOLE
5. MINIMUM REAR AND SIDE CLEARANCES: EACH = 2" [50.8] REAR = 6" [152.4]
6. DIMENSIONS IN BRACKETS [ ] ARE MM.
7. IF THE FLOOR DRAIN ONLY SERVICES THIS STEAMER, THEN THE DRAIN MAY BE LOCATED WITHIN THE STEAM FREE ZONE. STEAM FREE ZONE MUST BE OBSERVED IF OTHER APPLIANCES CAUSE STEAM AT THE FLOOR DRAIN.
8. DO NOT INSTALL STEAMER DIRECTLY ABOVE STEAM VENTING FLOOR DRAINS
9. STEAM EXHAUST

	NATURAL GAS	PROPANE GAS
RECOMMENDED INCOMING GAS FEED RATE	5" WC (1.2 KPa) MIN.	12" WC (3 KPa) MIN.
	14" WC (3.5 KPa) MAX.	14" WC (3.5 KPa) MAX.
GAS OPERATING PRESSURE	4.25" W.C.	10.5" W.C.
MAX. INPUT BTU/HR	124,000	124,000

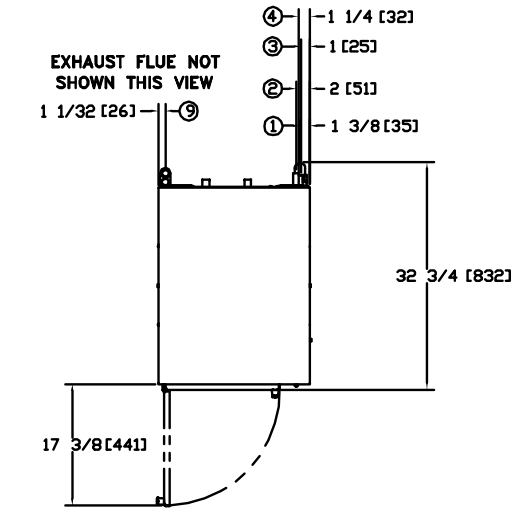

STEAM FREE ZONE
SEE NOTES

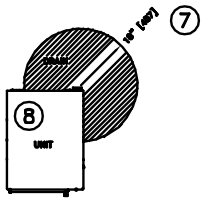

REAR OF STEAMER

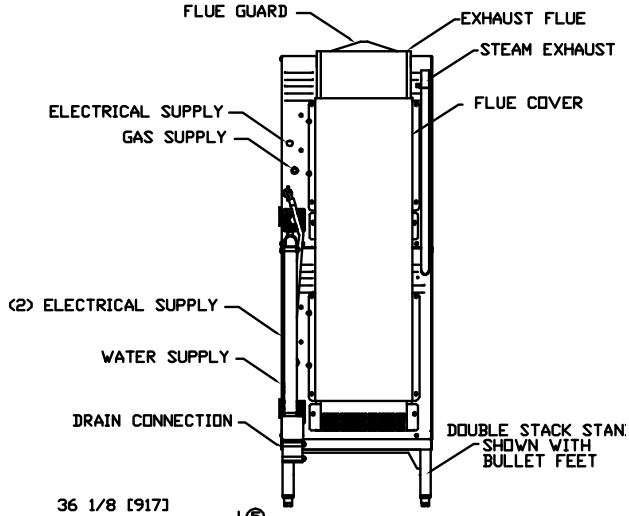

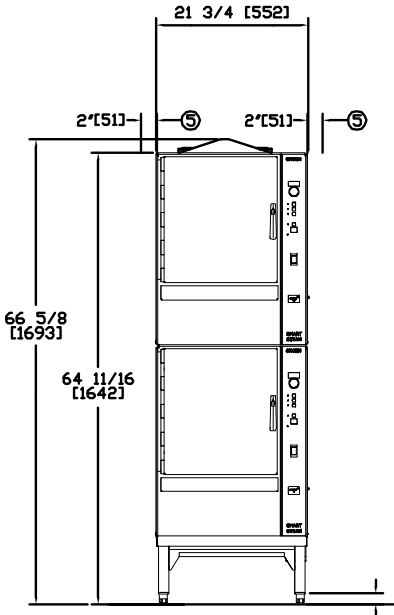

FRONT VIEW

1 1/2 [38] MINIMUM
2 5/8 [87] MAXIMUM

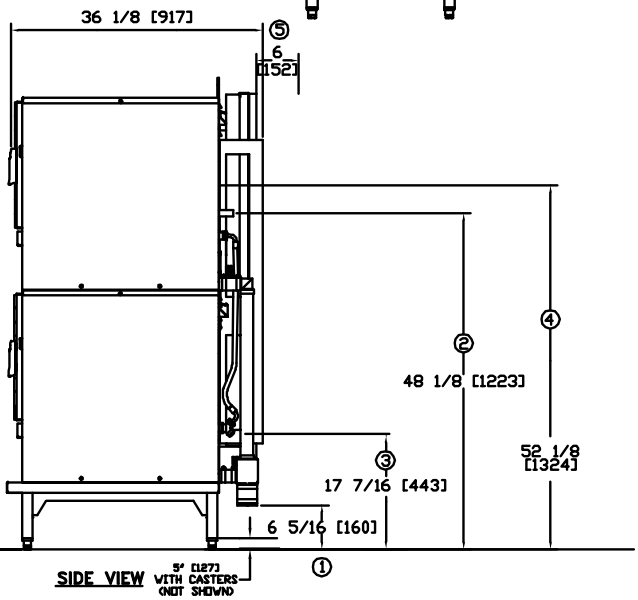

SIDE VIEW

MADE IN USA

NSF

© 2009 Unified Brands. All Rights Reserved. DOVER® and the DOVER® Logo are registered trademarks in the United States [and various other countries] of Unified Brands, a wholly-owned subsidiary of Dover Corporation.

GROEN®

Water Treatment System model SSB-WT

Single-Stage, Replaceable Cartridge, In-Line Water Treatment System

For Use With:
SmartSteam100™

Short Form
Water Treatment System shall be a Groen Model SSB-WT (P/N 149101), designed for use with Groen Model SmartSteam100 Boilerless Steamer, per Bulletin 149200 as follows. SSB-WT system to be a single stage, wall mounted treatment system with a replaceable treatment cartridge and a clear filter bowl to allow observation of the condition of the treatment material. Treatment chemical to assist in cleanability of the steamer cavity from hard water deposits forming in the steam generator. Cartridges to install without special tools and to provide up to six months of treated water for a single double-stacked steamer. System requires wall mounting and simple plumbing. Water treatment kit and cartridges to be made in U.S.A.

Description
SmartSteam100 Water Treatment System shall be Groen Model SSB-WT (Part No. 149100) designed specifically for use with the Groen SmartSteam100 Boilerless Steamer as follows:

Construction
System shall consist of a stainless steel mounting bracket with a single cartridge head, a clear filter bowl, a treatment cartridge, an integrated manifold and a water shut-off valve. It shall be designed for quick and easy cartridge replacement. Separate systems are recommended for each steamer at a location.

Replaceable Treatment Cartridges
System shall employ one replaceable cartridge that locks into the manifold head and is surrounded by a clear filter bowl. The treatment cartridge is designed to dispense a special treatment blend at a constant rate as water flows through the filter bowl. The cartridge can be easily changed without special tools. The cartridge is designed to provide sufficient treatment to the water consumed by a double-stacked SmartSteam100 steamer for 6 months, or longer, before needing replacement. The clear filter bowl provides visible indication of the amount of treatment chemical remaining in the unit.

Installation
Install using 3/4" NH [Garden Hose Type] connections in unit incoming [treated] water line. No special tools required. Note: The SmartSteam100 models are supplied with a single water input using NH connection fittings. Mounting bracket to be secured to wall, post or bracket with two sheet metal screws (supplied in the kit) and wall anchors as needed to support 20 pounds. See planograph for mounting hole position and overall unit dimensions.

Installation Location Recommendation
The SmartSteam100 Water Treatment Kit can be installed anywhere in the incoming water line, prior to the SmartSteam100 steamer using the treated water. However, we recommend it be mounted near the steamer to allow easy and frequent operator inspection of the cartridge. Note: Cartridge MUST be replaced when exhausted to ensure effective treatment of incoming water and long term trouble free cleaning of steam cooking equipment.

Options/Accessories
☐ Replacement Cartridge [Part No. 149101]

Origin of Manufacture
Treatment system and replaceable cartridges shall be made in the United States.

Model SSB-WT shown

Applications
Treatment of Water Containing:
Calcium
Iron
Magnesium

For use with Groen Model:
SmartSteam100™

1055 Mendell Davis Drive, Jackson, MS 39272
888-994-7636, unifiedbrands.net
Information contained in this document is known to be current and accurate at the time of printing/creation. Unified Brands recommends referencing our product line websites, unifiedbrands.net, for the most updated product information and specifications.

GROEN®

Model SSB-WT

P/N 149336 REV A

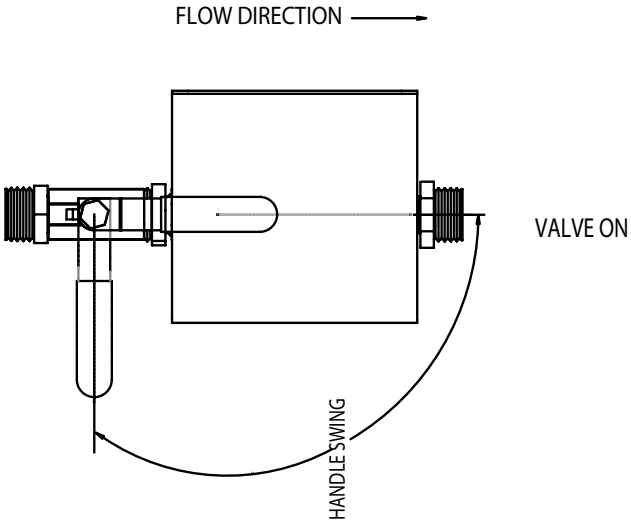

WATER TREATMENT SYSTEM PARTS LIST P/N 149100	
PART NUMBER	SERVICE PARTS
149101	REPLACEMENT CARTRIDGE
139391	FILTER HOUSING CONTAINER
139392	NIPPLE, 1/2" MPT
140839	BRACKET, FILTER MOUNTING

NOTES:

1. COLD WATER SUPPLY CONNECTION: 3/4" NH
2. DIMENSIONS IN BRACKETS [] ARE MM.

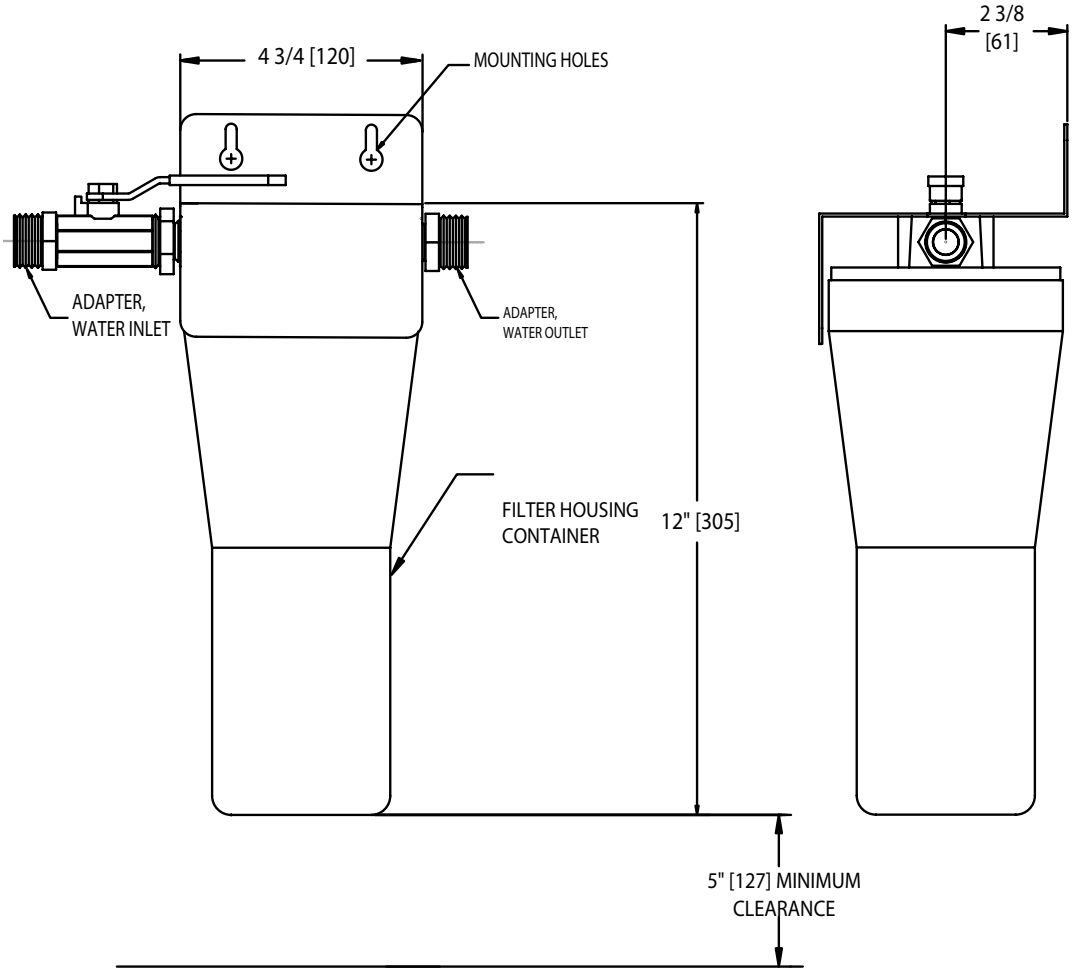

MADE IN USA

UNIFIED BRANDS
FOODSERVICE EQUIPMENT SOLUTIONS
A DOVER COMPANY
1055 Mendell Davis Drive, Jackson, MS 39272
888-994-7636, unifiedbrands.net
Information contained in this document is known to be current and accurate at the time of printing/creation. Unified Brands recommends referencing our product line websites, unifiedbrands.net, for the most updated product information and specifications.

RJS | BARBER ASSOCIATES

RJS | Barber Associates

Integrated Food Service Design

9/6/2013

ITEM# 23A - SAFETY SYSTEM MOVEABLE GAS CONNECTOR (1 REQ'D)

Dormont Manufacturing 1650KIT2S36PS

Safety System Moveable Gas Connector Kit, 1/2" inside dia., 36" long, covered with stainless steel braid, coated with blue antimicrobial PVC, 1 SnapFast™ QD, 2 SwivelMAX™, 1 full port valve, 1 pair Safety-Set™ with adhesive foam tape and hardware mounting options, coiled restraining cable with hardware, limited lifetime warranty

RJS | BARBER ASSOCIATES

RJS | Barber Associates

Integrated Food Service Design

9/6/2013

ITEM# 24A - GREASE HOOD (1 REQ'D)

Halton Co. KVE

Q KVE SJ H-1A Capture-Jet Hood Hood Qty: 1
Hood Qty: 1
Hood Length (In): 99 Inches
Hood Width (In): 56 Inches
Hood Height (In): 24 Inches
Style of Hood: Wall Unit
Hood Material: All 300 Stainless
Light Options: LED
Manual Balancing Damper: Yes
Ansul Pre-Pipe: R-102 Pre-Pipe
Switch Panel Qtys: 1
Timer Panel: Yes
Ceiling Closure Height (In): 18
Ceiling Closure Length (In): 265
Supply Plenum: Yes
Accuflow: Yes
Hood Qty: 1
Hood Length (In): 99 Inches
Hood Width (In): 66 Inches
Hood Height (In): 24 Inches
Style of Hood: Wall Unit
Hood Material: All 300 Stainless
Light Options: LED
Manual Balancing Damper: Yes
Ansul Pre-Pipe: R-102 Pre-Pipe
T-Stat: Yes
Ceiling Closure Height (In): 18
Ceiling Closure Length (In): 285
Supply Plenum: Yes
Accuflow: Yes
Standard Feature Description Capture-Jet
Listed UL Exhaust Hood; Capture-Jet Fan Technology
T.A.B. (Test Air Balance) Ports; KSA S/S Filters
93-98% Efficient on Particulate in the 5-10
Micron Range Based on ASTM-F2519-05; Exhaust
Volume Based on ASTM-f1704-05 and F2474-05;
KSA Filter Removal Tool
If the hoods have to be broken into smaller
sections to accommodate job site conditions
there will be additioal charges added per
section of hood

RJS | BARBER ASSOCIATES

RJS | Barber Associates

Integrated Food Service Design

9/6/2013

ITEM# 24A.1 - CAPTURE JET FAN (1 REQ'D)

Halton Co. CJF

Capture Jet Fan

RJS | BARBER ASSOCIATES

RJS | Barber Associates

Integrated Food Service Design

9/6/2013

ITEM# 24B - GREASE HOOD (1 REQ'D)

Halton Co. KVE

Q KVE SJ H-1B Capture-Jet Hood Hood Qty: 1
Hood Qty: 1
Hood Length (In): 99 Inches
Hood Width (In): 56 Inches
Hood Height (In): 24 Inches
Style of Hood: Wall Unit
Hood Material: All 300 Stainless
Light Options: LED
Manual Balancing Damper: Yes
Ansul Pre-Pipe: R-102 Pre-Pipe
Switch Panel Qtys: 1
Timer Panel: Yes
Ceiling Closure Height (In): 18
Ceiling Closure Length (In): 265
Supply Plenum: Yes
Accuflow: Yes
Hood Qty: 1
Hood Length (In): 99 Inches
Hood Width (In): 66 Inches
Hood Height (In): 24 Inches
Style of Hood: Wall Unit
Hood Material: All 300 Stainless
Light Options: LED
Manual Balancing Damper: Yes
Ansul Pre-Pipe: R-102 Pre-Pipe
T-Stat: Yes
Ceiling Closure Height (In): 18
Ceiling Closure Length (In): 285
Supply Plenum: Yes
Accuflow: Yes
Standard Feature Description Capture-Jet
Listed UL Exhaust Hood; Capture-Jet Fan Technology
T.A.B. (Test Air Balance) Ports; KSA S/S Filters
93-98% Efficient on Particulate in the 5-10
Micron Range Based on ASTM-F2519-05; Exhaust
Volume Based on ASTM-f1704-05 and F2474-05;
KSA Filter Removal Tool
If the hoods have to be broken into smaller
sections to accommodate job site conditions
there will be additioal charges added per
section of hood

RJS | BARBER ASSOCIATES

RJS | Barber Associates

Integrated Food Service Design

9/6/2013

ITEM# 24B.1 - CAPTURE JET FAN (1 REQ'D)

Halton Co. CJF

Capture Jet Fan

RJS | BARBER ASSOCIATES

RJS | Barber Associates

Integrated Food Service Design

9/6/2013

ITEM# 24C - EXHAUST FAN (1 REQ'D)

By General Contractor EF

Exhaust Fan - Provided thru the HVAC Contract

By G/C

RJS | BARBER ASSOCIATES

RJS | Barber Associates

Integrated Food Service Design

9/6/2013

ITEM# 24D - SUPPLY AIR FAN (1 REQ'D)

By General Contractor SUPPLY AIR FAN

Supply Air Fan, By Other Vendor, NIC within this scope of work, by GCr.

By G/C

RJS | BARBER ASSOCIATES

RJS | Barber Associates

Integrated Food Service Design

9/6/2013

ITEM# 24E - FIRE SUPPRESSION SYSTEM (1 REQ'D)

Halton Co. ANSUL/R-102

Ansul R-102 Fire System 1
Hood Length (In): 198 Inches
Ansul System Size: 6 Gallon System
Dwg, Permits & Air Test Only $:
Union Labor/Prev Wage $:
Fire Cabinet: Yes
Gas Valves: 2" Mechanical
Remote Tank Installation: 2
Ansul R-102 Description
Pre-Engineered Wet Chemical System per UL300
Tank System Enclosed in Stainless Steel Box
Pre-Piped in Factory to include Exhaust Duct
Protection, Plenum Protection, Overhead Appliance
Protection w/ SS Drops, Remote Pull Station and
Microswitches .
Final Field Installation by Certified Technician.
"Electrical contactor/ shunt trip breaker by EC.""

RJS | BARBER ASSOCIATES

RJS | Barber Associates

Integrated Food Service Design

9/6/2013

ITEM# 24F - ST/ST WALL FLASHING (1 REQ'D)

*Custom Stainless Misc ST/ST WALL

(1) Lot S/S Wall Panels For Cooking Line

to cover entire cooking wall under hood. 18 gauge S/S with T-strips, J-Strips and edge caps.

RJS | BARBER ASSOCIATES

RJS | Barber Associates

Integrated Food Service Design

9/6/2013

ITEM# 25 - FLOOR TROUGH (1 REQ'D)

IMC/Teddy CFT-2424-SGAS

CFT Floor Trough, 24" wide x 24" long x 4" deep, with drain & (SGAS) anti-slip subway grating

Project_____Consultant_____Model Number_____Item Number_____

CFT Floor Troughs
Standard Design

SPECIFICATION:

CFT Model Floor Troughs are 14-gauge type 304 stainless steel one-piece construction. Horizontal corners are coved and the trough is integrally pitched toward a waste outlet with a stainless steel beehive strainer and a 4” OD tailpiece.

Recessed flange and 1” deep ledge for IMC grating are integral with the unit. Troughs are 4” deep overall.

Joints are TIG welded and leak-proof. Exposed surfaces finished brush satin.

PRODUCT GUIDE:

Use for Commercial and Institutional Buildings or large food prep facilities.

Flexible design such as custom depths and cross-section shape make this a versatile drain trough.

Recessed flange supports floor tile and provides a grout pocket.

Setting frame for waterproof membrane and/or integral seepage flange with “weep” holes can be added for wet floor areas.

Extension arms and intersections available for multiple equipment layout.

OPTIONS:

- ☐ 12 gauge stainless steel
- ☐ Scrap collection tray
- ☐ Use with any style IMC trough grating
- ☐ Custom designs, sizes and waste location. Shallow 2” deep available
- ☐ Optional wastes and locations
- ☐ Laundry design with lint basket. (See Spec Sheet)
- ☐ Seepage flange and “weep” holes.
- ☐ See Price Book for other options.
- ☐ Standard and stock sizes fit most applications.
- ☐ Anti-Splash Design

*Price page 33

Specifications subject to change without notice.

IMC/TEDDY FOOD SERVICE EQUIPMENT

P.O. Box 206
Copiague, NY 11726-0206

800-221-5644/631-789-8881
Fax: 631-789-3633

www.imcteddy.com

CFT-30 1007

CFT Floor Troughs
Standard Design

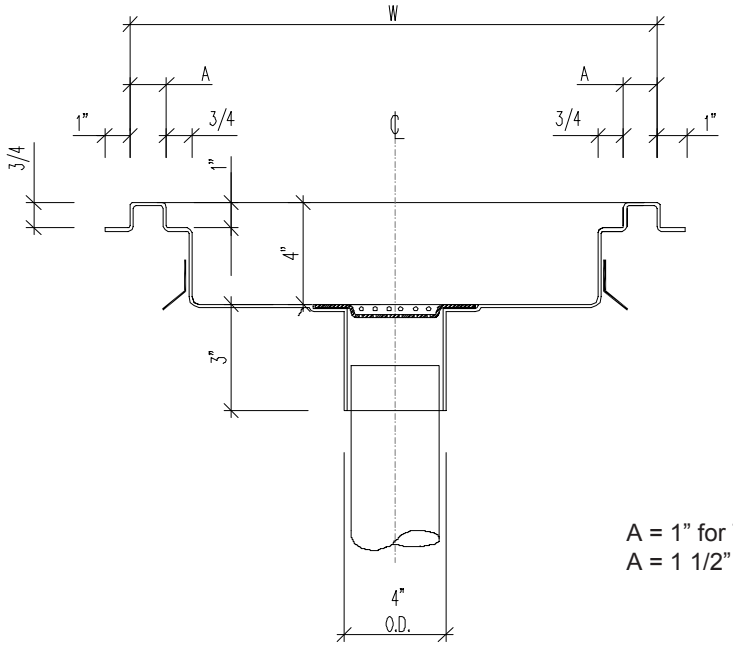

A = 1" for Troughs up to 15" Wide
A = 1 1/2" for Troughs over 15" Wide

FLOOR TROUGHS, CFT SERIES, STANDARD DESIGN - 4" Deep

MODEL	SIZE (W x L)	METRIC	WEIGHT		MODEL	SIZE (W x L)	METRIC	WEIGHT
CFT-1224	12" x 24"	305 x 610	16		CFT-2424	24" x 24"	610 x 610	28
CFT-1236	12" x 36"	305 x 914	24		CFT-2436	24" x 36"	610 x 914	42
CFT-1248	12" x 48"	305 x 1219	32		CFT-2448	24" x 48"	610 x 1219	56
CFT-1260	12" x 60"	305 x 1524	40		CFT-2460	24" x 60"	610 x 1524	70
CFT-1272	12" x 72"	305 x 1829	48		CFT-2472	24" x 72"	610 x 1829	84
CFT-1284	12" x 84"	305 x 2134	56		CFT-2484	24" x 84"	610 x 2134	98
CFT-1296	12" x 96"	305 x 2438	64		CFT-2496	24" x 96"	610 x 2438	112
CFT-12108	12" x 108"	305 x 2743	72		CFT-24108	24" x 108"	610 x 2743	126
CFT-12120	12" x 120"	305 x 3048	80		CFT-24120	24" x 120"	610 x 3048	140
CFT-1824	18" x 24"	458 x 610	20		CFT-3024	30" x 24"	762 x 610	42
CFT-1836	18" x 36"	458 x 914	30		CFT-3036	30" x 36"	762 x 914	63
CFT-1848	18" x 48"	458 x 1219	40		CFT-3048	30" x 48"	762 x 1219	84
CFT-1860	18" x 60"	458 x 1524	50		CFT-3060	30" x 60"	762 x 1524	105
CFT-1872	18" x 72"	458 x 1829	60		CFT-3072	30" x 72"	762 x 1829	126
CFT-1884	18" x 84"	458 x 2134	70		CFT-3084	30" x 84"	762 x 2134	147
CFT-1896	18" x 96"	458 x 2438	80		CFT-3096	30" x 96"	762 x 2438	168
CFT-18108	18" x 108"	458 x 2743	90		CFT-30108	30" x 108"	762 x 2743	189
CFT-18120	18" x 120"	458 x 3048	100		CFT-30120	30" x 120"	762 x 3048	210

Note - Standard troughs up to 96" have one (1) waste at center. Over 96", troughs have two (2) wastes equidistant.

*See Price book pages 33, 37, 41, 45, 52, 54 & 56-59 for additional sizes and options.
Specifications subject to change without notice.

IMC/TEDDY
FOOD SERVICE EQUIPMENT

P.O. Box 206
Copiague, NY 11726-0206

800-221-5644/631-789-8881
Fax: 631-789-3633

www.imcteddy.com

CFT-30 1007

RJS | BARBER ASSOCIATES

RJS | Barber Associates

Integrated Food Service Design

9/6/2013

ITEM# 25A - TILTING SKILLET, GAS (1 REQ'D)

Cleveland Range SGL30T1

PowerPan™ Tilting Skillet, Gas, 30-gallon capacity, bead blasted cooking surface, 10º tilt cooking feature, with easy manual hand tilt, spring-assisted cover with vent, gallon & liter markings, food strainer, stainless steel construction with open leg frame, CE, NSF

ACCESSORIES

Mfr	Qty	Model	Spec
Cleveland Range	1		One year limited warranty, standard
Cleveland Range	1		Gas type to be specified
Cleveland Range	1		120v/60/1-ph, 1.4 amps, standard.
Cleveland Range	1	TD2SK	2" tangent draw-off valve, front mounted left side, includes FSSK strainer
Cleveland Range	1	TDDC	Drain Cup Assembly, includes: 8' length of 2" ID hose , stainless steel cup assembly & hose clamp
Cleveland Range	1	DPS13	Double Pantry Faucet with 3/4" swing spout & bracket

ELECTRICAL

	VOLTS	CYCLE	PHASE	CONN	AFF	NEMA	AMPS	KW	HP	MCA	MOCP
1	120	60	1				1.4				

GAS

	SIZE	MBTU	KW
1	3/4"	125.0	

STEAM

	INLET SIZE	RETURN SIZE	LB/HR	PSIG (min)	PSIG (max)
1					

WATER

	HOT SIZE	HOT AFF	HOT GPH	COLD SIZE	COLD AFF	FILTERED SIZE	FILTERED AFF	CONDENSER INLET SIZE	CONDENSER OUTLET SIZE
1	1/2"			1/2"					

WASTE

	INDIRECT SIZE	DIRECT SIZE
1		

Cleveland

BRAISING PANS /
TILTING SKILLETS

Project _____
Item _____
Quantity _____
FCSI Section _____
Approval _____
Date _____

PowerPan™ SERIES

GAS, 35" RIM HEIGHT,
30 & 40 GALLON (110 & 150 LITER)

MODELS: ☐ SGL-30-T1
☐ SGL-40-T1

Cleveland Standard Features

- Available in 30 & 40 gallon (115 & 150 liter) open frame design models. Full capacity to bottom of pouring lip.
- Exclusive Ultra Efficient Power Burner (Forced-Air) Gas Combustion System with Automatic Ignition.
- Exclusive Dual Power Settings: 90,000 and 125,000 Btu for 30 gallons, 160,000 Btu and 200,000 Btu for 40 gallons provides superior heat-up and recovery.
- Open base design for easy cleaning and maintenance.
- 5/8" Stainless Steel Bead Blasted cooking surface prevents warping and keeps food from sticking.
- Durable 12 gauge, 304 Stainless Steel pan construction. 5/8″ (16mm) mild steel clad bottom plus a 1/16″ (1.6mm) Stainless Steel plate for even temperature distribution.
- Low 35" rim height for easy operation and cleaning.
- Splash Proof Controls and construction.
- Supplied with Cord & Plug for 115-volt controls.
- Easy-to-turn manual hand tilt with enclosed permantly lubricated gearbox. Optional power tilt with manual override available.
- Gallon/Liter Markings and Vented Spring Assist Cover standard.
- Available with Optional 2" Tangent Draw-Off Valve.
- 10° Cooking Feature. Tilt unit up to 10° without the power being turned off.
- Adjustable, Electronic Thermostat accurately controls temperature from 100° to 450° F.
- Electronic "Spark Ignition System Standard".
- Spring-Assist Cover with full width handle and vent.
- Typical approvals include AGA, CSA, CE and NSF.

Options & Accessories

- ❒ Power Tilt with Manual Override (PT2)
- ❒ 2" (50 mm) Tangent Draw-Off Valve (TD2SK), left side only
- ❒ Double or Single Pantry Faucet (SPS14, DPS14), includes Faucet Mounting Bracket
- ❒ Faucet Bracket (FBKT1)
- ❒ Pan Carriers (PCS), not available on 30 gallon models with a Tangent Draw-Off Valve
- ❒ Vegetable Steamer Baskets (VS)

Shown with optional 2" Tangent Draw Off Valve

Short Form Specifications

Shall be CLEVELAND, Tilting Skillet Model Number SGL-___-T1, gas (type____) holding no less than ____ gallons (____ liters); Complete with Dual Power Setting, Normal and High Power Cooking Controls, Power Burner (Forced-Air) Gas Combustion System, Automatic Ignition, Splash-Proof Construction, Spring Assist Cover with Vent, Gallon/Liter Markings, 5/8" Stainless Steel Clad Cooking Surface with Bead Blasted Finish, Easy to use Manual Hand Tilt with Enclosed Permantly Lubricated Gearbox, Adjustable Feet with Rear Flanged and Front Bullet Style.

- ❒ Hot & Cold Water Pre-Rinse Spray Head with Hose (PRS-S)
- ❒ Poaching Pans (PP)
- ❒ Voltage Option:
  - VOSK3, 440/480 Volt, 60 Hz, 3 Phase
  - VOSK4, 220/240 Volt, 50 Hz, 1 Phase - for export
- ❒ Protective Control Cover (CP-PCB-T1)
- ❒ Casters, 2 swivel, 2 locking (CST1)

1333 East 179 St.,
Cleveland, Ohio, U.S.A. 44110
Tel: 1-216-481-4900
Fax: 1-216-481-3782
Web Site: www.ClevelandRange.com
Email: Steam@ClevelandRange.com

Manitowoc

DIMENSIONS

MODEL	A	B	C	D	E (combustible wall)	E (non-combustible wall)	F	G	H
SGL-30-T1	37 7/8"	24 1/2"	31 3/4"	12"	3 1/2"	2	18 1/4"	5 3/4"	8"
	(963mm)	(623mm)	(807mm)	(305mm)	(89mm)		(464mm)	(146mm)	(204mm)
SGL-40-T1	49 7/8"	36 1/2"	43 3/4"	18"	3 1/2"	2	24 1/4"	5 3/4"	8"
	(1267mm)	(928mm)	(1112mm)	(458mm)	(89mm)		(616mm)	(146mm)	(204mm)

CAPACITIES

In 4 oz. servings. Other sizes may be calculated.
30 gallons / 115 Liters.....960
40 gallons / 150 Liters.....1280

SPECIFICATIONS

ELECTRICAL SUPPLY			GAS SUPPLY (PIPING 3/4" NPT)	CLEARANCE	APPROX. SHIPPING WEIGHTS
VOLTS:	120	220/240	**TYPE**: NAT or LP	**RIGHT**:	***SGL-30-T1***
PHASE:	1	1	**WATER COLUMN**: 3.5 (NAT), 10 (LP)	4" (102mm) (manual tilt)	520 LBS.
AMPS:	1.4	1.5	**BTU PER CU. FT.**: 1025 (NAT), 2500 (LP)	1" (26mm) (power tilt)	235 KG.
FREQ:	60 HZ	50 HZ	**SUPPLY PRESSURE**:	**LEFT**: 0"	
			5" W.C. MIN (NAT), 11" W.C. MIN (LP)	**REAR**:	***SGL-40-T1***
			BTU RATINGS:	0 (non-combustible wall)	560 LBS.
			SGL-30-T : 125,000 per hour	3.5" (89mm)	255 KG.
			SGL-40-T : 200,000 per hour	(combustible wall)	

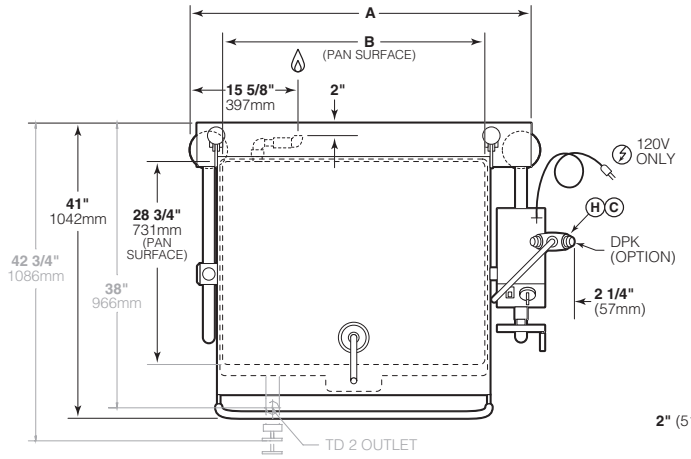

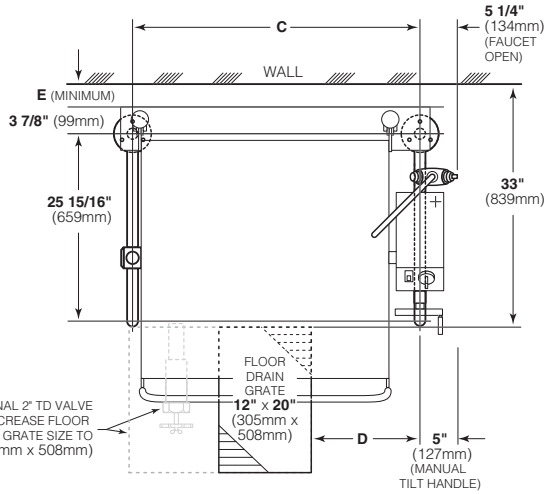

LEG LOCATION &
SUGGESTED FLOOR DRAIN DETAIL

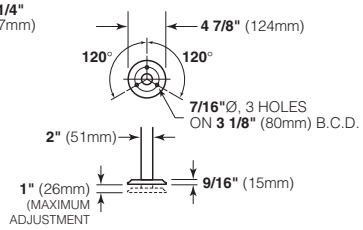

FLANGED FOOT DETAIL
(REAR LEGS ONLY)

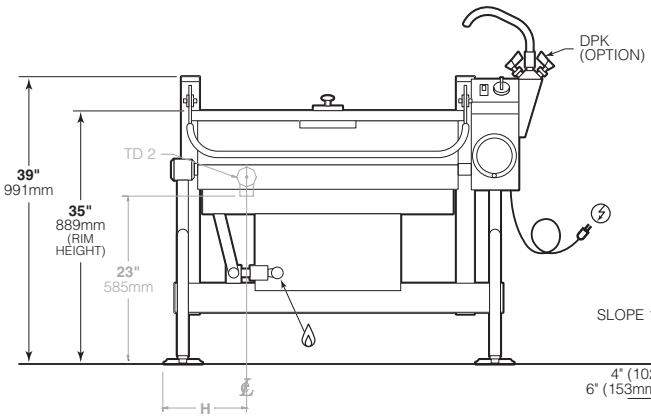

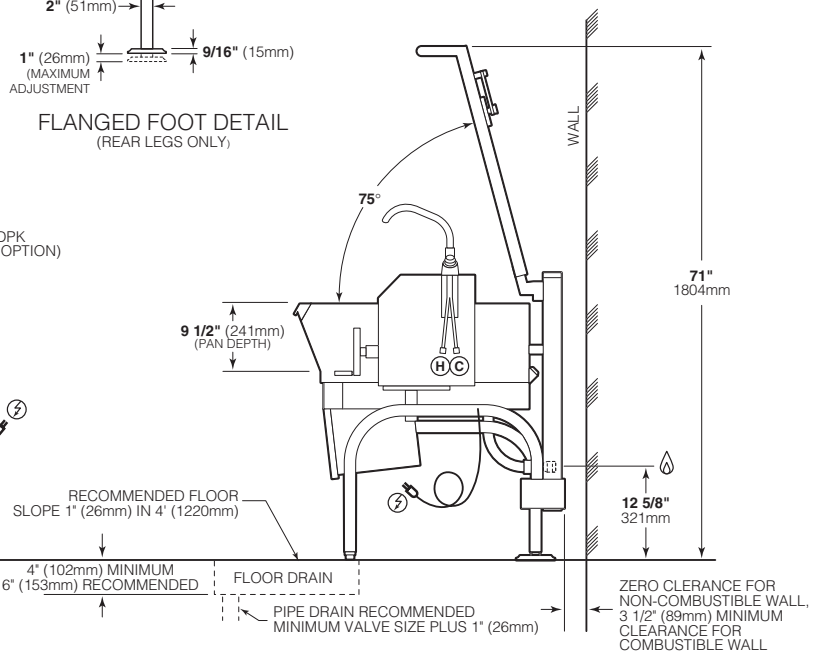

NOTE: OPTIONAL 2" TD VALVE SHOWN IN GRAY

(NOT TO SCALE)

NOTES:
Cleveland Range reserves right of design improvement or modification, as warranted.
Many regional, state and local codes exist and it is the responsibility of the owner and installer to comply with the codes.
Cleveland Range equipment is built to comply with applicable standards for manufacturers. Included among those approval agencies are U.L., NSF, CGA, CSA, ETL and others.

Cleveland

OPTIONS & ACCESSORIES

Project _____
Item _____
Quantity _____
FCSI Section _____
Approval _____
Date _____

DRAIN CUP ASSEMBLY

MODEL:

☐ TD-DC

Cleveland Standard Features

- The 8' long hose (cut to required length) can be positioned to a remote floor drain. Ideal for the following units that have a Tangent Draw-Off Valve but do not have a floor drain:
  - floor model stationary kettles
  - floor model tilting kettles
  - floor model tilting skillets
- All Stainless Steel Construction

TD-DC
Shown on
KDL-80-T

SECT. XIII PAGE 17
0609

1333 East 179 St.,
Cleveland, Ohio, U.S.A. 44110
Tel: 1-216-481-4900
Fax: 1-216-481-3782
Web Site: www.ClevelandRange.com
Email: Steam@ClevelandRange.com

Manitowoc

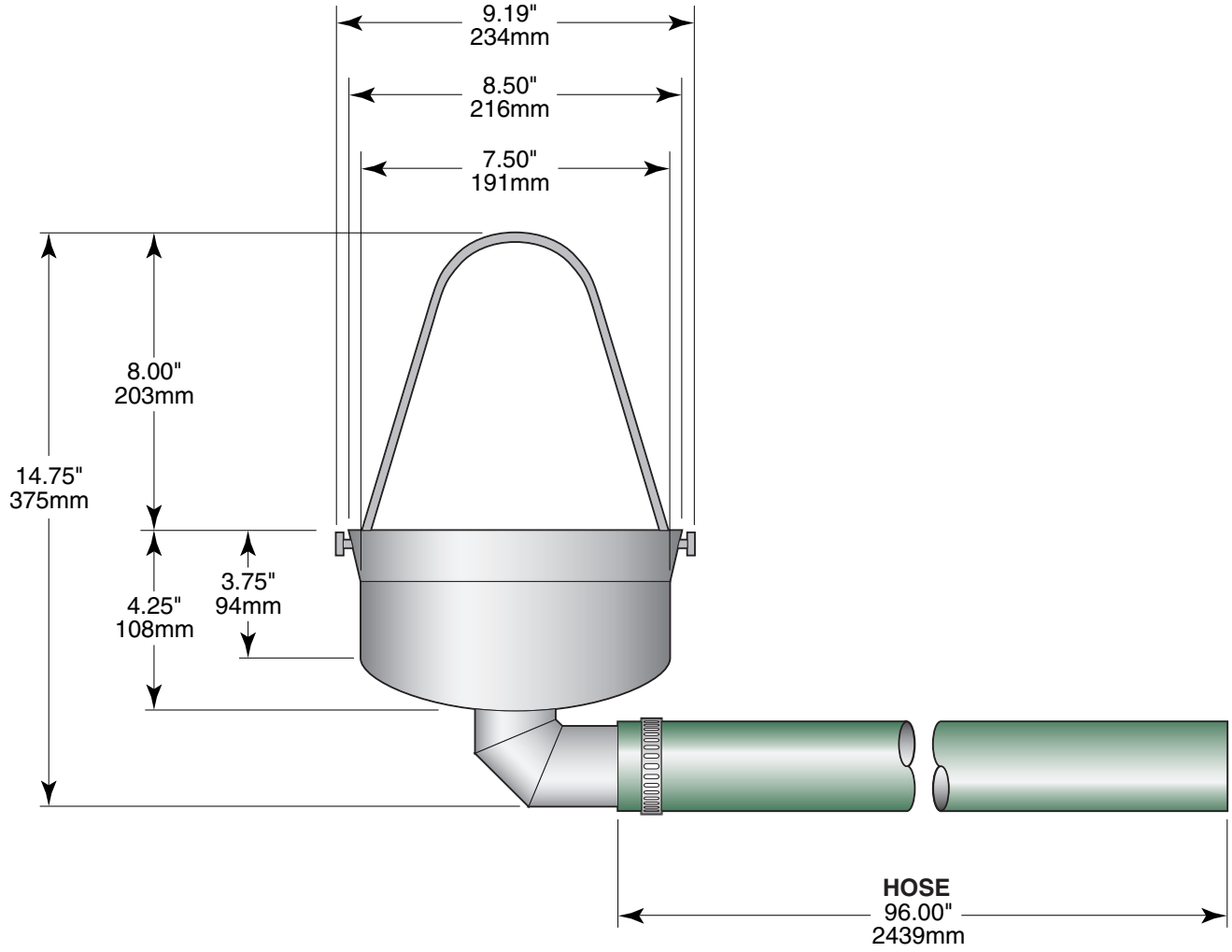

(NOT TO SCALE)
SECT. XIII PAGE 18
0609
Litho in U.S.A.

RJS | BARBER ASSOCIATES

RJS | Barber Associates

Integrated Food Service Design

9/6/2013

ITEM# 25B - SAFETY SYSTEM MOVEABLE GAS CONNECTOR (1 REQ'D)

Dormont Manufacturing 1675KIT2S48

Safety System Moveable Gas Connector Kit, 3/4" inside dia., 48" long, covered with stainless steel braid, coated with blue antimicrobial PVC, 1 SnapFast™ QD, 2 SwivelMAX™, 1 full port valve, coiled restraining cable with hardware, limited lifetime warranty

For Commercial Applications

Job Name _____ Contractor _____
Job Location _____ Approval _____
Engineer _____ Contractor's P.O. No. _____
Approval _____ Representative _____
SKU _____

Double Swivel MAX® /SnapFast® Quick-Disconnect Assemblies

Sizes: ½" to 1¼" (15 to 32mm)

Double Swivel MAX/SnapFast Quick-Disconnect Assemblies feature flexible movement and the one-handed quick-disconnect fitting with a unique thermal shut-off design that automatically shuts off the gas when the internal temperature exceeds 350°F (177°C). The 360° movement of Swivel MAX at both ends gives maximum protection to the life of the connector and greatly increases kitchen aisle space by allowing the appliance to be closer to the wall.

Features

Swivel MAX®

Multi-plane Fitting	Aluminum body, plated steel fitting
Movement	360° rotational end fitting

SnapFast® One-Handed Quick-Disconnect

Quick-Disconnect	Brass body, aluminum collar
Thermal Shut-off	Shuts off gas when internal temperatures exceed 350°F (177°C)

Specifications

The Dormont Blue Hose®

Tubing	Annealed, 304 stainless steel
Braiding	Multi-strand, 304 stainless steel wire
Coating	Blue antimicrobial PVC, melts at 350°F (177°C), coating will not hold a flame
End Fittings	Carbon steel; zinc trivalent chromate
Stress Guard®	360° rotational end fitting at both ends

Additional Components

Restraining Device	PVC coated, steel multi-strand cable and mounting hardware
Valve	Full port, brass body

Approvals & Certifications

NSF/ANSI 169 – Special-purpose food equipment and devices
ANSI Z21.69 / CSA 6.16 – Connectors for moveable gas appliances
ANSI Z21.41 / CSA 6.9 – Quick-Disconnect Devices for use with gas fuel appliances
ANSI Z21.15 / CSA 9.1 – Manually operated gas valves for appliances, appliance connectors
UL 567 _ Pipe connectors for flammible and combustible liquids and LP gas
Meets requirements of ANSI Z223.1 / NFPA 54 National Fuel Gas Code
Not for use in temperatures less than 32°F (0°C). For indoor use only.
Max operating pressure 1/2 psi.
Refer to the catalog for additional approvals and certifications or go to www.dormont.com.
A restraining device is required for all moveable gas equipment.

Safety System™ The Dormont Safety System™ is the first and only complete gas equipment connection system specifically engineered for the commercial kitchen. The Safety System consists of the famous Dormont Blue Hose and a variety of accessories designed for improved safety and performance in commercial kitchens. Because they are manufactured in the USA under an ISO qualified production process and to multiple design certifications, you can Connect with Confidence with the Dormont Safety System.

Dormont®

Double Swivel MAX® with SnapFast® Quick-Disconnect Deluxe Kit Assembly

Ordering Information

		LENGTH				
Configuration	Size I.D.	24" (607mm)	36" (914mm)	48" (1,219mm)	60" (1,524mm)	72" (1,829mm)
Deluxe Kit* Basic Kit** Hose Assembly***	½" (15mm)	1650KIT2S24 1650BPQ2SR24 1650BPQ2S24	1650KIT2S36 1650BPQ2SR36 1650BPQ2S36	1650KIT2S48 1650BPQ2SR48 1650BPQ2S48	1650KIT2S60 1650BPQ2SR60 1650BPQ2S60	1650KIT2S72 1650BPQ2SR72 1650BPQ2S72
Deluxe Kit* Basic Kit** Hose Assembly***	¾" (20mm)	1675KIT2S24 1675BPQ2SR24 1675BPQ2S24	1675KIT2S36 1675BPQ2SR36 1675BPQ2S36	1675KIT2S48 1675BPQ2SR48 1675BPQ2S48	1675KIT2S60 1675BPQ2SR60 1675BPQ2S60	1675KIT2S72 1675BPQ2SR272 1675BPQ2S72
Deluxe Kit* Basic Kit** Hose Assembly***	1" (25mm)	16100KIT2S24 16100BPQ2SR24 16100BPQ2S24	16100KIT2S36 16100BPQ2SR36 16100BPQ2S36	16100KIT2S48 16100BPQ2SR48 16100BPQ2S48	16100KIT2S60 16100BPQ2SR60 16100BPQ2S60	16100KIT2S72 16100BPQ2SR72 16100BPQ2S72
Deluxe Kit* Basic Kit** Hose Assembly***	1¼" (32mm)	16125KIT2S24 16125BPQ2SR24 16125BPQ2S24	16125KIT2S36 16125BPQ2SR36 16125BPQ2S36	16125KIT2S48 16125BPQ2SR48 16125BPQ2S48	16125KIT2S60 16125BPQ2SR60 16125BPQ2S60	16125KIT2S72 16125BPQ2SR72 16125BPQ2S72

BTU/hr Flow Capacity Natural Gas (Flow rating BTU/hr 0.64 SP. GR. @ 0.5 inch WC pressure drop)

		LENGTH				
Model	Size I.D.	24" (607mm)	36" (914mm)	48" (1,219mm)	60" (1,524mm)	72" (1,829mm)
1650BPQ2S	½" (15mm)	77,000	69,000	60,000	54,000	48,000
1675BPQ2S	¾" (20mm)	205,000	193,000	160,000	140,000	124,000
16100BPQ2S	1" (25mm)	366,000	336,000	295,000	261,000	247,000
16125BPQ2S	1¼" (32mm)	472,000	461,000	449,000	441,000	440,000

***Deluxe Kits include:** The Dormont Blue Hose, Double Swivel MAX, SnapFast, restraining device and full port valve
****Basic Kits include:** The Dormont Blue Hose, Double Swivel MAX, SnapFast, and restraining device
*****Hose Assemblies include:** The Dormont Blue Hose, Double Swivel MAX, SnapFast

Typical Installation

The Dormont Blue Hose®

The Dormont Blue Hose is a commercial, moveable-grade gas connector designed for use with moveable equipment.

Moveable equipment is defined in ANSI Standard Z21.69/CSA 6.16 as gas utilization equipment that may be mounted on casters or otherwise be subject to movement.

SwivelMAX®

- Reduces stress on connector
- Increases kitchen aisle space by allowing connector to be positioned closer to the wall

SnapFast®

- One-handed quick-disconnect fitting
- Thermal shut-off when internal temperature exceeds 350°F (177°C)

Restraining Device

- ANSI Z21.69 Standard section 1.7.4 states: Connectors when used on caster-mounted equipment shall be installed with a restraining device, which prevents transmission of the strain to the connector

We guarantee our commercial gas connectors for the life of the original appliance to which it is connected.

Dormont®

A Watts Water Technologies Company

USA: Export, PA • Tel. (724) 733-4800 • Fax: (724) 733-4808 • www.dormont.com

ES-D-DBLSwivelSnapFast 1205

© 2012 Dormont

RJS | BARBER ASSOCIATES

RJS | Barber Associates

Integrated Food Service Design

9/6/2013

ITEM# 26 - RANGE, 36", 6 OPEN BURNERS (1 REQ'D)

Southbend 4362D

Ultimate Restaurant Range, Gas, 36", 6 Non-Clog burners with wavy grates, standard oven base, standing pilot, 22-1/2" flue riser with heavy duty shelf, stainless steel front, sides and shelf, 6" adjustable legs, 207,000 BTU, CSA, NSF

ACCESSORIES

Mfr	Qty	Model	Spec
Southbend	1		Standard one year limited warranty (range)
Southbend	1		NOTE: 22.5" high flue riser, with heavy duty shelf, standard
Southbend	1		LP Gas
Southbend	1		Battery spark ignition (for open top burners, charbroilers, hot tops and griddles)
Southbend	1		Casters, 2 locking & 2 standard, in lieu of legs
Southbend	1		Extra oven rack

GAS

	SIZE	MBTU	KW
1	3/4"	207.0	

STEAM

	INLET SIZE	RETURN SIZE	LB/HR	PSIG (min)	PSIG (max)
1					

Ultimate Restaurant Range 36” Series

Job _____ Item# _____

Standard Features

- Commercial gas range 36” wide with a 37” high cooking top
- 4”Stainless steel front rail, stainless steel front and sides
- Front located manual gas shut-off to entire range
- One year No Quibble, 24/7 parts and labor warranty
- Factory installed Regulator
- Cast iron grate top will hold a 14” stock pot
- Standing pilot for open top burners
- Battery spark ignition for oven bases

Optional 33K Non-clog Burners (Burner Option 1)

- (6) patented, one piece, lifetime clog free, cast iron burners
- 33,000 BTU NAT

Optional Wavy Grates (Burner Option 2)

- Cast bowl design for better efficiency
- Allows full use of entire range top
- Available only with 27K BTU Non-clog burners

Optional Cast Iron Star/Saute' Burners (Burner Option 3)

- (6) 33,000 BTU NAT star burners
- Port arrangement allows for even distribution of flame

Optional Split Burner Configuration (Burner Option 4)

- (3) Star/Saute‘ burners in front and (3) standard 33K burners in rear

Optional 5 Burner Configuration (Burner Options 5 and 6)

- Combine (2) Pyromax burners in the rear with either (3) standard 33K burners (Opt 5) or (3) star 33K burners (Opt 6) in the front

Optional Pyromax Burners (Burner Option 7)

- 40,000 BTU NAT
- PATENTED high output, three piece, easy clean Non-clog burner
- Built in port protection drip ring
- Group of 4 burners available

Optional Griddle Top (L or R)

- 12”, 24" or 36" Available
- 1/2" thick cold rolled steel griddle plate
- Manual or thermostatically controlled

Optional Charbroiler (L or R)

- 24” or 36” Available
- Removable, cast iron grates

Configure your own custom spec sheet and model number at **www.BuildMyRange.com.** Refer to AutoQuotes for list pricing.

(4361D Shown)

Kitchen Innovations 2010 AWARD

CONSTRUCTION SPECIFICATIONS

Exterior Finish: Stainless steel front, sides and shelf standard.

RangeTop:- 27” deep cooking surface. Center-to-center measurements between burners not less than 12”, side-to-side or front-to-back. A removable one piece drip tray is provided under burners to catch grease drippings.

Flue Riser: 22.5” flue riser standard with heavy duty shelf. Optional 10” and 5” flue riser available without shelf.

Oven Door: Spring assisted, counterweight door.

Oven Interior: Double sided, full porcelain enamel oven cavity for superior cleanability and corrosion protection. Coved corners for easy cleaning and enhanced airflow eliminating hot/cold spots.

Legs: 6” stainless steel adjustable legs standard (casters optional)

Pressure Regulator: Factory installed.

Available Base Combinations

D, A, C, HxxxxD, HxxxxA

Standard Oven Models (D)

45,000 BTU NAT oven with standing pilot and thermostat range of 175^{0}F to 550^{0}F (79^{0}C to 288^{0}C). Porcelain enamel interior measuring 14” high x 26” wide x 26.5” deep. Full sized pans fit both ways. One rack with two position side rails.

Convection Oven Models (A):

32,000 BTU NAT convection oven with standing pilot and thermostat range of 175^{0}F to 550^{0}F (79^{0}C to 288^{0}C). Porcelain enamel interior measuring 14” high x 26” wide x 24” deep. Three racks with five position side rails. 1/2 hp, 1710 rpm, 60 cycle, 115V AC, high efficiency, permanent split phase motor with permanent lubricated ball bearings, overload protection and Class “B” insulation. On/Off switch to allow CO base to operate as a standard oven.

Stainless Steel Cabinet (C)

Stainless steel cabinet base. Optional no-charge doors that open from the center.

Hybrid Electric Standard Oven (HxxxxD)

4.5 kW electrically heated oven, with all the same base features of the gas standard oven at left (D).

Hybrid Electric Convection Oven (HxxxxA)

6 kW electrically heated oven, with all the same base features of the gas standard oven above (A).

Form 436 Rev 10 (February/2013)

Printed in USA

Dimensions -in (mm)

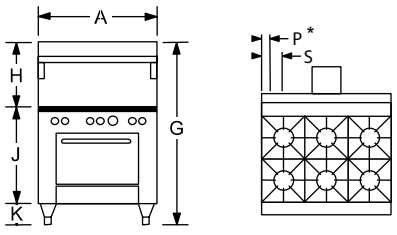

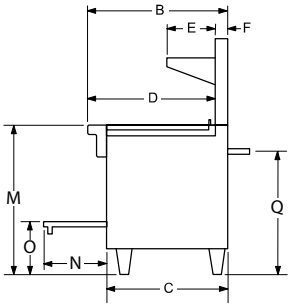

Ranges WITHOUT Convection Oven

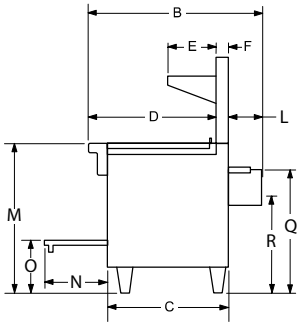

Ranges WITH Convection Oven

Models	Exterior											Cook Top	Door Opening	Oven Bottom	3/4" Gas Conn.		Electric	
	Width A	Depth B	C	D	E	F	G	H	J	K	L	M	N	O	P*	Q	R	S
436_D, H436_D	36.50" (927)	34.00" (864)	29.75" (756)	31.00" (787)	10.00" (254)	2.75" (70)	59.50" (1511)	22.50" (572)	31.00" (787)	6.00" (152)	-	37.00" (940)	15.50" (394)	13.00" (330)	3.25" (83)	30.25" (768)	-	-
436_A, H436_A	36.50" (927)	42.13" (1070)	29.75" (756)	31.00" (787)	10.00" (254)	2.75" (70)	59.50" (1511)	22.50" (572)	31.00" (787)	6.00" (152)	8.25" (210)	37.00" (940)	15.50" (394)	13.00" (330)	3.25" (83)	30.25" (768)	24.00" (610)	6.00" (152)

Models	Oven Interior			Crate Size			Cubic Volume	Crated Weight
	Width	Depth	Height	Width	Depth	Height		
436_D, H436_D	26.00" (660)	26.50" (673)	14.00" (356)	58.00" (1473)	48.00" (1219)	44.00" (1118)	70.9 cu. ft 2.01cu.m.	660 lbs. 300 kg.
436_A, H436_A	26.00" (660)	24.00" (610)	14.00" (356)					

*Gas Connection will be located on opposite side of optional griddle/charbroiler location (if optional griddle/charbroiler is located on the left, the gas connection will be moved to the right side).

Configure your own custom spec sheet and model number at **www.BuildMyRange.com.**
Refer to AutoQuotes for list pricing.

UTILITY INFORMATION

BTUs Each Burner	Std Non-Clog	Star/Saute'	Wavy Non-clog	Pyromax	(A) Cnv Oven per cavity	(D) Std Oven per cavity	Griddle 12"	Griddle 24"	Griddle 36"	Charbroiler 24"	Charbroiler 36"	Hot Top 12"
NAT	33K	33K	27K	40K	32K	45K	18K	48K	64K	64K	96K	24K
LP	24K	24K	24K	31K	30K	40K	18K	48K	64K	64K	96K	24K

GAS:
- One 3/4" female connection.
- Required minimum inlet pressure
  - Natural gas 7" W.C.
  - Propane gas 11" W.C.

ELECTRICAL: (for Gas models with convection ovens)
- Standard -115/60/1 furnished with 6' cord with 3-prong plug. Total max amps 5.9 per convection oven base.
- Optional -208/60/1, 50/60/1 phase. Supply must be wired to junction box with terminal block located at rear. Total max amps 2.7.

ELECTRICAL: (For Optional Hybrid Electric Ovens)
H436_D - 208/60/1- 39 amps, 220/60/1-37 amps, 240/60/1-34 amps
H436_A - 208/60/1-32 amps, 220/60/1-31 amps, 240/60/1-27 amps

MISCELLANEOUS

- If using Flex-Hose, the I.D. should not be smaller than 3/4" and must comply with ANSI Z 21.69.
- If casters are used with flex hose, a restraining device should be used to eliminate undue strain on the flex hose.
- For installation on combustible floors (with 6" high legs or casters) and adjacent to combustible walls, allow 10" clearance.
- Clearance to noncombustible construction is 10" for charbroilers and 0" for all other tops and bases.
- Recommended - Install under vented hood.
- Check local codes for fire, installation and sanitary regulations.
- If the unit is connected directly to the outside flue, an A.G.A approved down draft diverter must be installed at the flue outlet of the oven.
- Two speed motors are not available on Restaurant Range Convection Ovens.

NOTICE: Southbend has a policy of continuous product research and improvement. We reserve the right to change specifications and product design without notice. Such revisions do not entitle the buyer to corresponding changes, improvements, additions or replacements for previously purchased equipment.

OPTIONS AND ACCESSORIES

- ☐ 5" flue riser
- ☐ 10" Flue Riser
- ☐ 3/4" quick disconnect with flexible hose complies with ANSI Z 21.69 (specify 3ft, 4ft, 5ft)
- ☐ Casters-all swivel-front with locks
- ☐ Hot Top plate - plate replaces 2 Open burners
- ☐ Cabinet base doors (No Charge)
- ☐ Extra Oven Racks
- ☐ Various salamander & cheesemelter mounts available. (Please refer to the price list)
- ☐ Rear step up burners
- ☐ Flame Failure available (Contact factory for available model numbers)
- ☐ Battery spark ignition for open tops, charbroilers, griddles and hot tops

INTENDED FOR COMMERCIAL USE ONLY.
NOT FOR HOUSEHOLD USE.

1100 Old Honeycutt Road, Fuquay-Varina, NC 27526
(919) 762-1000 www.southbendnc.com

Form 436 Rev 10 (February/2013)

RJS | BARBER ASSOCIATES

RJS | Barber Associates

Integrated Food Service Design

9/6/2013

ITEM# 26A - SAFETY SYSTEM MOVEABLE GAS CONNECTOR (1 REQ'D)

Dormont Manufacturing 1675KIT2S48PS

Safety System Moveable Gas Connector Kit, 3/4" inside dia., 48" long, covered with stainless steel braid, coated with blue antimicrobial PVC, 1 SnapFast™ QD, 2 SwivelMAX™, 1 full port valve, 1 pair Safety-Set™ with adhesive foam tape and hardware mounting options, coiled restraining cable with hardware, limited lifetime warranty

RJS | BARBER ASSOCIATES

RJS | Barber Associates

Integrated Food Service Design

9/6/2013

ITEM# 27 - WORK TABLE (1 REQ'D)

Custom Fab CUSTOM

Work Table, 30" wide top, with splash at rear only, enclosed base 96" long, with adjustable undershelf, s/s frame & shelf, 14 gauge, type 304 stainless steel top, 10" backsplash, with countertop non drip edge, 16 gauge type 304 s/s legs with s/s bullet feet

ACCESSORIES

Mfr	Qty	Model	Spec
Custom Fab	2	CUSTOM	Prep Sink Welded Into Table Top, 20" X 20" X 12"
Custom Fab	2	CUSTOM	Drain, lever operated with built in overflow, 2" NPT and 1-1/2" IPS outlet connections
Custom Fab	1	CUSTOM	Hand Sink Welded Into Table Top, 10" X 14" X 8"
Custom Fab	1	CUSTOM	5" tall NSF partition
Custom Fab	1	CUSTOM	Enclosed Cabinet Base with door by hand sink section only.

WATER

	HOT SIZE	HOT AFF	HOT GPH	COLD SIZE	COLD AFF	FILTERED SIZE	FILTERED AFF	CONDENSER INLET SIZE	CONDENSER OUTLET SIZE
1									
2									

WASTE

	INDIRECT SIZE	DIRECT SIZE
1	1-1/2"	1-1/2"
2	1-1/2"	

RJS | BARBER ASSOCIATES

RJS | Barber Associates

Integrated Food Service Design

9/6/2013

ITEM# 27A - OVERSHELF (1 REQ'D)

Custom Fab CUSTOM

Shelf, wall-mounted, stainless steel, 12" wide, 8 feet long

ADVANCE TABCO®
SMART FABRICATION™

STAINLESS STEEL & ALUMINUM

WALL SHELVES NSF

Item #: _____ ***Qty #:*** _____

Model #: _____

Project #: _____

KD Wall Shelf

FEATURES:

Furnished with a 1 1/2" sanitary rolled rim with a 1-1/4" turn-up edge on sides and rear.

Unit is easily assembled employing the slip-fit TAB-LOK design.

CONSTRUCTION:

Shelf and brackets are die stamped and die formed.

MATERIAL:

WS-KD Series - 18 gauge stainless steel polished to a satin finish.

AWS-KD Series - Heavy gauge aluminum.

Requirements for NSF Installations

1. Install at least 60" above floor.
2. Limit to dry storage.
3. Avoid contact with liquids.
4. For "Ganging-Up" installation, allow at least 2" between units or mount units side by side and seal joints with an approved sealant.

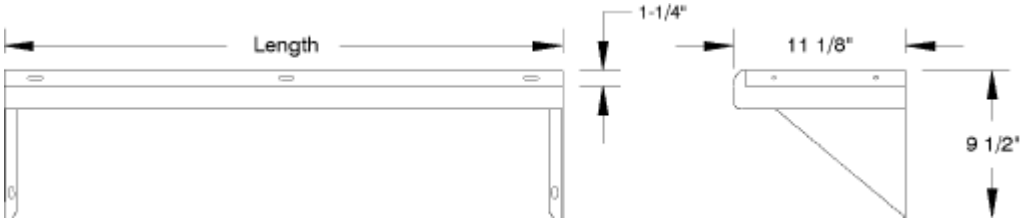

S/S	ALUMINUM	length
WS-KD-24	AWS-KD-24	24"
WS-KD-36	AWS-KD-36	36"
WS-KD-48	AWS-KD-48	48"
WS-KD-60	AWS-KD-60	60"

Standard Wall Shelf

Furnished with a 1 1/2" sanitary rolled rim with a 1-1/2" turn-up edge at rear. Ends are turned down square.

18 gauge type "430" stainless steel.

Secured to wall by means of bolts through support brackets.

Brackets can be positioned to accomodate wall studs.

Units 7 ft. and larger are furnished with 3 brackets.

10" Wide	Qty	12" Wide	Qty	15" Wide	Qty	18" Wide	Qty
WS-10-24		WS-12-24		WS-15-24		WS-18-24	
WS-10-36		WS-12-36		WS-15-36		WS-18-36	
WS-10-48		WS-12-48		WS-15-48		WS-18-48	
WS-10-60		WS-12-60		WS-15-60		WS-18-60	
WS-10-72		WS-12-72		WS-15-72		WS-18-72	
WS-10-84		WS-12-84		WS-15-84		WS-18-84	
WS-10-96		WS-12-96		WS-15-96		WS-18-96	
WS-10-108		WS-12-108		WS-15-108		WS-18-108	
WS-10-120		WS-12-120		WS-15-120		WS-18-120	
WS-10-132		WS-12-132		WS-15-132		WS-18-132	
WS-10-144		WS-12-144		WS-15-144		WS-18-144	

Length = 24" to 144" in 12" increments.

Width	A
10"	8"
12"	10"
15"	10"
18"	10"

USE TA-49 For Wall Shelf Offset

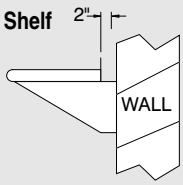

ADVANCE TABCO®
SMART FABRICATION™
www.advancetabco.com

Customer Service Available To Assist You 1-800-645-3166 8:30 am - 8:00 pm E.S.T.

Email Orders To: customer@advancetabco.com. For Smart Fabrication™ Quotes, Email To: smartfab@advancetabco.com or Fax To: 631-586-2933

NEW YORK Fax: (631) 242-6900 **GEORGIA** Fax: (770) 775-5625 **TEXAS** Fax: (972) 932-4795 **NEVADA** Fax: (775) 972-1578

ADVANCE TABCO is constantly engaged in a program of improving our products. Therefore, we reserve the right to change specifications without prior notice. © ADVANCE TABCO, DEC. 2005 **L-5**

RJS | BARBER ASSOCIATES

RJS | Barber Associates

Integrated Food Service Design

9/6/2013

ITEM# 27B - FAUCET (1 REQ'D)

Fisher 60704

Faucet, 8" backsplash mount, with 14" swing spout, wrist handles, stainless steel

WATER

	HOT SIZE	HOT AFF	HOT GPH	COLD SIZE	COLD AFF	FILTERED SIZE	FILTERED AFF	CONDENSER INLET SIZE	CONDENSER OUTLET SIZE
1	1/2"			1/2"					

WASTE

	INDIRECT SIZE	DIRECT SIZE
1		

SPEC. 61220

8" C/C BACKSPLASH FAUCET W/ LEVER HANDLES

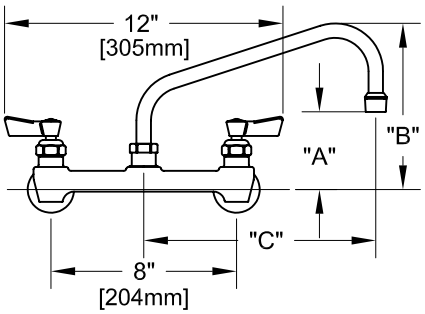

8" C/C BACKSPLASH FAUCET W/ WRIST HANDLES

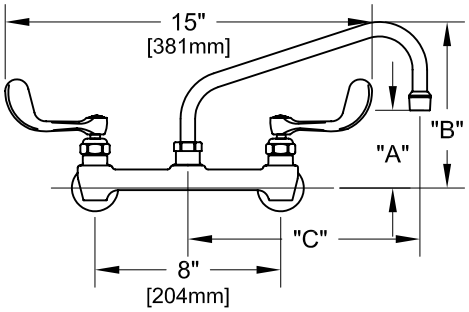

8" C/C BACKSPLASH FAUCET

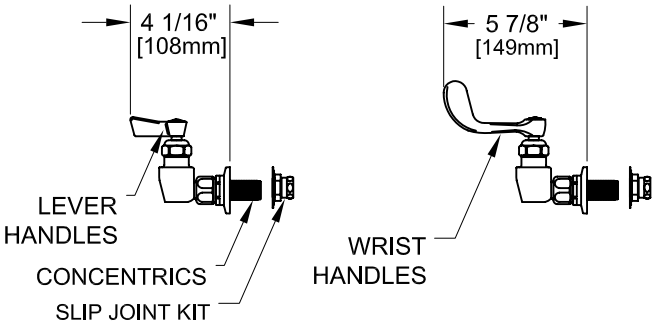

ROUGH-IN:

BACKSPLASH

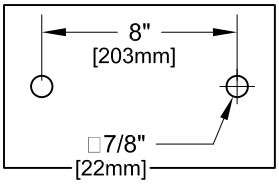

ANSI/A112.18.1-2005

PRODUCT NAME:
STAINLESS STEEL
8" C/C BACKSPLASH FAUCET

MODEL:

- ☐ 61220 W/ 6" SWING SPOUT W/ LEVER HANDLES
- ☐ 61093 W/ 8" SWING SPOUT W/ LEVER HANDLES
- ☐ 60968 W/ 10" SWING SPOUT W/ LEVER HANDLES
- ☐ 60836 W/ 12" SWING SPOUT W/ LEVER HANDLES
- ☐ 60690 W/ 14" SWING SPOUT W/ LEVER HANDLES
- ☐ 60569 W/ 16" SWING SPOUT W/ LEVER HANDLES
- ☐ 61239 W/ 6" SWING SPOUT W/ WRIST HANDLES
- ☐ 61107 W/ 8" SWING SPOUT W/ WRIST HANDLES
- ☐ 60976 W/ 10" SWING SPOUT W/ WRIST HANDLES
- ☐ 60844 W/ 12" SWING SPOUT W/ WRIST HANDLES
- ☐ 60704 W/ 14" SWING SPOUT W/ WRIST HANDLES
- ☐ 60577 W/ 16" SWING SPOUT W/ WRIST HANDLES

FEATURES

CONTROL VALVE
* 8" C/C BACKSPLASH MOUNT
* CONCENTRICS
* STAINLESS STEEL CONSTRUCTION
* SWIVELLING SEAT DISKS
* HOT SIDE STEM - RIGHT HAND
* COLD SIDE STEM - LEFT HAND
* LEVER HANDLES OR WRIST HANDLES
* SWING SPOUT

SYSTEM LIMITS
* TEMP: 40°F MIN. TO 140°F MAX.
* PRESSURE: 200 PSI MAX. STATIC
* 2.20 GPM AT 80 PSI

SHIPPING WEIGHT
* 5.0 LBS

* NSF 61-9 APPROVED & LISTED
www.truesdail.com

MODELS	DIM "A"	DIM "B"	DIM "C"
61220 61239	2-1/4" [57mm]	5-7/8" [149mm]	6" [152mm]
61093 61107	2-1/2" [64mm]	6-3/8" [162mm]	8" [204mm]
60968 60976	3-1/8" [79mm]	6-7/8" [175mm]	10" [254mm]
60836 60844	3-3/4" [95mm]	7-3/8" [187mm]	12" [305mm]
60690 60704	4-3/8" [111mm]	8-1/4" [210mm]	14" [356mm]
60569 60577	5" [127mm]	8-7/8" [225mm]	16" [406mm]

FISHER
FISHER MANUFACTURING COMPANY
TOLL FREE: 800-421-6162 - FAX: 800-832-8238
information@fisher-mfg.com - www.fisher-mfg.com

RJS | BARBER ASSOCIATES

RJS | Barber Associates

Integrated Food Service Design

9/6/2013

ITEM# 27C - PAPER TOWEL (1 REQ'D)

Georgia-Pacific EMOTION

Emotion Wall Mount Automated Touchless Towel Dispensers. Item provided by Vendor/Owner Supplied

<By Vendor>

RJS | BARBER ASSOCIATES

RJS | Barber Associates

Integrated Food Service Design

9/6/2013

ITEM# 27D - ELECTRONIC FAUCET (1 REQ'D)

T&S Brass EC-3100-120X

ChekPoint Electronic Faucet, 120X rigid GN, vandal resistant aerator

WATER

	HOT SIZE	HOT AFF	HOT GPH	COLD SIZE	COLD AFF	FILTERED SIZE	FILTERED AFF	CONDENSER INLET SIZE	CONDENSER OUTLET SIZE
1				1/2"					

WASTE

	INDIRECT SIZE	DIRECT SIZE
1		

T&S BRASS AND BRONZE WORKS, INC.
2 SADDLEBACK COVE / P.O. BOX 1088 / TRAVELERS REST, SC 29690
PHONE 800-476-4103 - FAX 864- 834-3518

REG.#A2601
ISO #9001

EC-3100-120X

RELIABILITY BUILT IN

Job Name:

Architect/Engineer Approval:

Notes:

ADA Compliant

T&S ChekPoint™

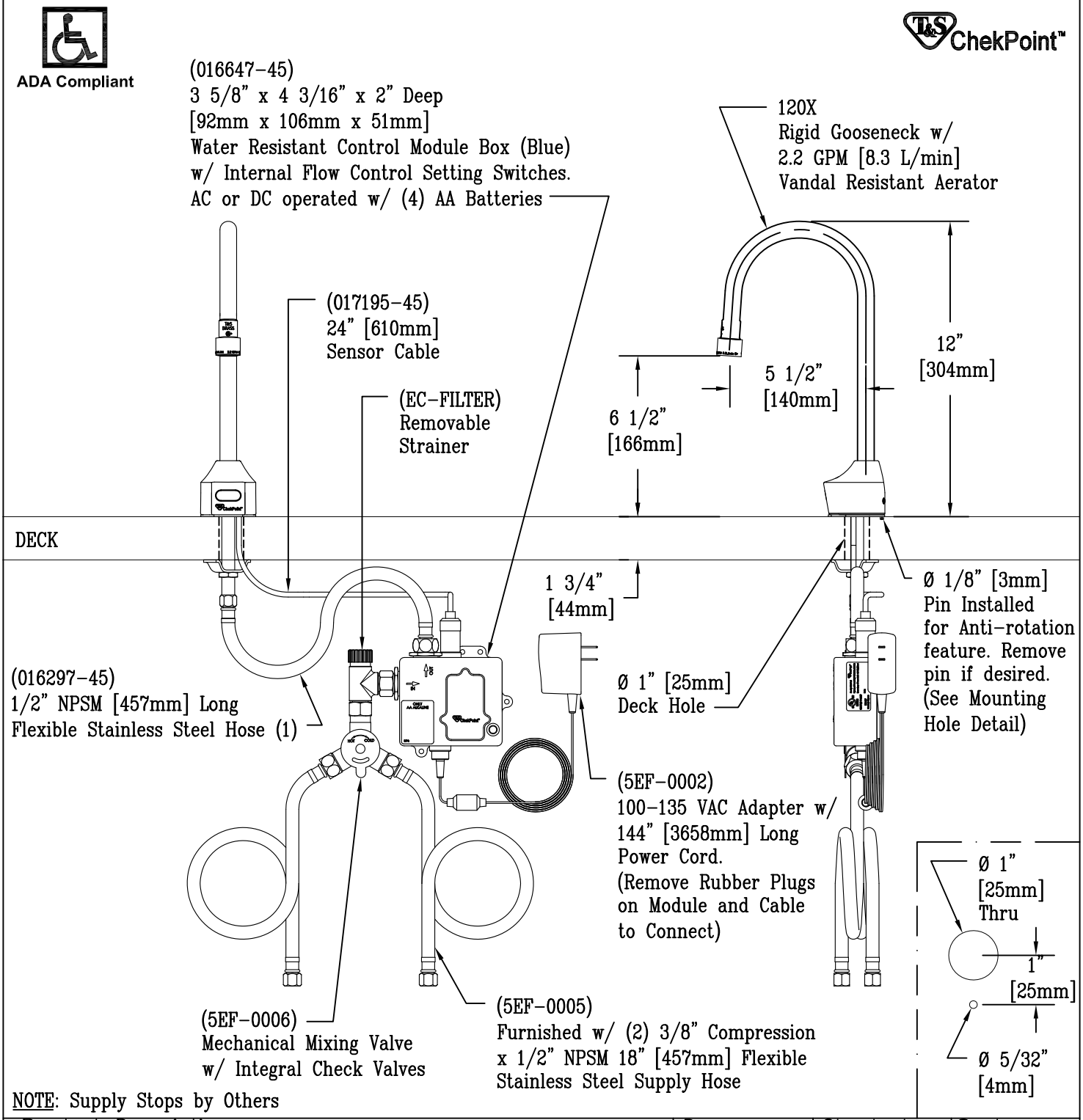

NOTE: Supply Stops by Others

Product Description:
Deck Mount Electonic Faucet, 120X Rigid Gooseneck w/ VR Aerator, AC/DC Control Module w/ Internal Flow Control Setting Switches, Temp Control Mixing Valve, 18" Hot & Cold Flexible Connector Hoses

Drawn:	Checked	Scale:
GEF	DMH	NTS
Approved		Date:
JHB		08/23/10

RJS | BARBER ASSOCIATES

RJS | Barber Associates

Integrated Food Service Design

9/6/2013

ITEM# 27E - SOAP DISPENSER (1 REQ'D)

By Vendor BY VENDOR

SOAP DISPENSER

<By Vendor>

RJS | BARBER ASSOCIATES

RJS | Barber Associates

Integrated Food Service Design

9/6/2013

ITEM# 27F - WASTE BASKET (1 REQ'D)

Rubbermaid FG254300BLA

Waste Basket, 28 qt., 14-1/2"L x 10-1/2"W x 15-5/16"H, fire resistant, rounded corners, textured finish, fiberglass, CSFM & UL approved, black

Deskside Wastebaskets & Tops

Space-efficient and economical.

- Rolled rims add strength and are easy to clean
- Fits under standard-height desk even when swing top is fully extended
- Designed for convenient desk-side waste management
- Tops provide a hygienic waste management solution without reducing wastebasket capacity
- Untouchable® Top adds an aesthetic, cost-efficient upgrade to your waste collection system

SEE PAGE 190 FOR RECYCLING OPTIONS.

New!

FG295073 / FG295600

FG295600

FG295700

FG307120

DESKSIDE WASTEBASKETS

No.	Color	Description	U.S. Dimensions	U.S. Capacity	U.S. Ship Wt/Ctn	Metric Dimensions	Metric Capacity	Metric Ship Wt/Ctn	Can Liners	Pack
FG295073	**GRN, BLUE, GRAY, BLA**	Side Bin Recycling Center	10.6" l x 7.3" w x 11.7" h	-	9.0 lb	26.9 cm x 18.5 cm x 29.7 cm	-	4.1 kg	-	12
FG295200	**BEIG**	Wastebasket, Vanity	9.88" l x 6.75" w x 10.13" h	8⅛ qt	4.4 lb	25.1 cm x 17.1 cm x 25.7 cm	7.7 L	2 kg	5002-88[A]	6
FG295500	**GRAY, BEIG**	Wastebasket, Small	11.38" l x 8.25" w x 12.13" h	13⅜ qt	15.6 lb	28.9 cm x 21 cm x 30.8 cm	12.9 L	7.1 kg	5002-88[A]	12
FG295500	**BLA**	Wastebasket, Small	11.38" l x 8.25" w x 12.13" h	13⅜ qt	15.6 lb	28.9 cm x 21 cm x 30.8 cm	12.9 L	7.1 kg	5002-88[A]	12
FG295600	**GRAY, BEIG**	Wastebasket, Medium	14.38" l x 10.25" w x 15" h	28⅛ qt	22.5 lb	36.5 cm x 26 cm x 38.1 cm	26.6 L	10.2 kg	5002-88[A]	12
FG295600	**BLA**	Wastebasket, Medium	14.38" l x 10.25" w x 15" h	28⅛ qt	22.5 lb	36.5 cm x 26 cm x 38.1 cm	26.6 L	10.2 kg	5002-88[A]	12
FG295700	**GRAY, BEIG**	Wastebasket, Large	15.25" l x 11" w x 19.88" h	41¼ qt	29.4 lb	38.7 cm x 27.9 cm x 50.5 cm	39 L	13.3 kg	5003-88[A]	12
FG295700	**BLA**	Wastebasket, Large	15.25" l x 11" w x 19.88" h	41¼ qt	29.4 lb	38.7 cm x 27.9 cm x 50.5 cm	39 L	13.3 kg	5003-88[A]	12

[A] Not for sale in California.

UNTOUCHABLE® TOPS & COMBO

No.	Color	Description	U.S. Dimensions	U.S. Ship Wt/Ctn	Metric Dimensions	Metric Ship Wt/Ctn	Can Liners	Pack
FG306600	**BLA, BEIG**	Untouchable® Top for FG295600 Container	15" l x 10.88" w x 6" h	7.5 lb	38.1 cm x 27.6 cm x 15.2 cm	3.4 kg		6
1779742	GRAY	Untouchable® Top for FG295600 Container	15" l x 10.88" w x 6" h	7.5 lb	38.1 cm x 27.6 cm x 15.2 cm	3.4 kg		6
FG306700	**BLA, BEIG**	Untouchable® Top for FG295700 Container	16" l x 11.63" w x 7" h	8.5 lb	40.6 cm x 29.5 cm x 17.8 cm	3.9 kg		6
FG307120	**BEIG**	Untouchable® Top/Soft Wastebasket Combo: FG306700 Lid/FG295700 Wastebasket	N/A	22.9 lb	N/A	10.4 kg	5003-88[A]	6

[A] Not for sale in California.

Fire Resistant Wastebaskets

Contemporary shape with UL rating.

- Great for use in areas requiring increased levels of fire protection, such as hospitals, schools, and hotels
- Fiberglass containers have rounded corners for added strength
- Textured finish helps minimize appearance of surface scratches and is easy to clean
- Tested and classified by Underwriters Laboratories as able to contain burning paper without causing wastebasket meltdown

CLASSIFIED UL

CSFM

No.	Color	Description	U.S. Dimensions	U.S. Capacity	U.S. Ship Wt/Ctn	Metric Dimensions	Metric Capacity	Metric Ship Wt/Ctn	Pack
FG254000	**BEIG**	Fire Resistant Wastebasket	8.88" l x 6.38" w x 10.8" h	7 qt	10.2 lb	22.6 cm x 16.2 cm x 27.4 cm	6.6 L	4.6 kg	6
FG254100	**GRAY, BLA, BEIG**	Fire Resistant Wastebasket	11.13" l x 8.25" w x 12.25" h	14 qt	17.8 lb	28.3 cm x 21 cm x 31.1 cm	13.2 L	8.1 kg	6
FG254300	**GRAY, BLA, BEIG**	Fire Resistant Wastebasket	14.5" l x 10.5" w x 15.3" h	28 qt	31.8 lb	36.8 cm x 26.7 cm x 38.9 cm	26.5 L	14.4 kg	6
FG254400	**BEIG**	Fire Resistant Wastebasket	15" l x 11.25" w x 20" h	40 qt	33.0 lb	38.1 cm x 28.6 cm x 50.8 cm	37.9 L	15 kg	4

For Other Fire Rated Containers See:

Profile
Wall Mounted, pg. 122

Step-On
Containers, pg. 126

Steel Containers
pg. 170

WasteMaster
Containers, pg. 131

Plaza®
Containers, pg. 153

Ranger®
Containers, pg. 152

Smoking Management
Containers, pg. 157

RJS | BARBER ASSOCIATES

RJS | Barber Associates

Integrated Food Service Design

9/6/2013

ITEM# 28 - WALK IN COOLER (1 REQ'D)

American Panel Corporation CUSTOM

WALK-IN COOLER

13'- 1" X 7'- 2" X 9'- 6" high 35° F Cooler

Foamed-in-Place 4" Urethane floor panels 14 Gauge Galvanized Steel (not NSF approved)

Exposed Exterior: 20 gao stainless steel, #3 fmish

Interior Walls: .040 USDA white smooth alum.

Unexposed Exterior: 26 gao stucco acrylume

Interior Ceiling: .040 USDA white smooth alum.

All panels are NSF 4" foamed-in-place urethane, UL classified with flame spread rating of20.

ACCESSORIES

Mfr	Qty	Model	Spec
American Panel Corporation	1	HINGED WALK-IN DOOR(S)	1 36" X 77" flush mount magnetic infitting door with cam-rise hinges, padlockable deadbolt handle (exterior doors only), door closer, brushed hardware, fully programmable WALK-IN MONITORING SYSTEM 100 featuring audio/visual temperature alarm with digital thermometer, high & low set points, 115V output, energy saving door frame heater wire, vapor proof light & switch with pilot light.
American Panel Corporation	1		3/4" Plywood Underlayment in Floor Panel (not available with 2" floors)
American Panel Corporation	1		High Security Mortise Cylinder Deadbolt Lock (Kason 10944-5)
American Panel Corporation	1		System 200 W-I Mon. Sys. (repl. Sys. 100), SD Mem. Card Interface, HACCP Compliant & Batt. Back-Up
American Panel Corporation	1		Panic Alarm for use with System 200 Walk-In Monitoring System (quoted separately)
American Panel Corporation	1		Relay to Enable Dry Contacts Connection on System 100 (pre-wired)
American Panel Corporation	1		PC Commun. (2-way) for System 200 Walk-In Monitoring System (quoted separately)
American Panel Corporation	1		Light Switch, CAL-OSHA, special 3-way per door with System 100 or 200 Controller
American Panel Corporation	1		CCI Clear Vu 2-pc Swing Door Curtain, 34" (or 36") x 80" opening
American Panel Corporation	1		(3) Spring-Loaded Hinges per Door
American Panel Corporation	1		Vision Window, 14" x 14" heated
American Panel Corporation	2		Door Kickplate, 14 gao SIS, 36" High, <37" Door
American Panel Corporation	1		Door bumper bar, 114" x 3" alum. (APe), int. only, requires int. KP (not incl.)
American Panel Corporation	1		Foot Treadle
American Panel Corporation	2		Trim Strips, 3" x 3", 20 gao Stainless Steel
American Panel Corporation	43		Closure Panel to lO' ceiling, 20 gao Stainless

		Steel
American Panel Corporation	2	Fluorescent Light Fixture, Cooler 48" double bulb (35°F operating temp.)
American Panel Corporation	19	Bumper Rail, 4" x 18 gao SIS with wood insert & Hidden Top Mounting
American Panel Corporation	1	Motion sensor wi light activator & shut off, coolers & freezers (Kason 1901) up to 20' ceiling ht.
American Panel Corporation	1	1/8" Stainless Steel Threshold Plate (36" wide doors and below)
American Panel Corporation	1	Custom Length and Width Upcharge

ELECTRICAL

	VOLTS	CYCLE	PHASE	CONN	AFF	NEMA	AMPS	KW	HP	MCA	MOCP
1	120	60	1								

RJS | BARBER ASSOCIATES

RJS | Barber Associates

Integrated Food Service Design

9/6/2013

ITEM# 28A - COOLER EVAPORATOR COIL (1 REQ'D)

American Panel Corporation CTA38-88

Cooler Evaporator Coil - 208/60/1 Refer to FS-W Drawing for all mechanical information and connection points

<Included>

ELECTRICAL

	VOLTS	CYCLE	PHASE	CONN	AFF	NEMA	AMPS	KW	HP	MCA	MOCP
1	208/230	60	1				13.4/1.2				

WATER

	HOT SIZE	HOT AFF	HOT GPH	COLD SIZE	COLD AFF	FILTERED SIZE	FILTERED AFF	CONDENSER INLET SIZE	CONDENSER OUTLET SIZE
1									

WASTE

	INDIRECT SIZE	DIRECT SIZE
1	3/4"	

RJS | BARBER ASSOCIATES

RJS | Barber Associates

Integrated Food Service Design

9/6/2013

ITEM# 28B - COOLER CONDENSOR (1 REQ'D)

American Panel Corporation FJAF-0106-CAV-020

COOLER: 35*/1.00 HP med temp, hermetic PAR refrigeration system, 208/230/60/1

Both include center mount evapator coil, 5-year compressor warranty.

BY K.E.C. INSTALL PANEL & REFRIGERATION SYSTEMS AND ALLOW FOR DISTANCE AND LENGTH OF RUNS IN PROPERLY SIZING REFRIGERATION COMPONENTS.

Refer to FS-W Drawing for all mechanical information and connection points

ACCESSORIES

Mfr	Qty	Model	Spec
American Panel Corporation	1		Galv Weather Cover
American Panel Corporation	1		Steel Compressor Mounting Stand
American Panel Corporation	1		LASA Winterization Controls, Package

RJS | BARBER ASSOCIATES

RJS | Barber Associates

Integrated Food Service Design

9/6/2013

ITEM# 29 - PLASTIC SHELVING UNIT (5 REQ'D)

Metro 5X367GX3

MetroMax i™ Starter Shelving Unit, (5) open grid polymer shelves with Microban® antimicrobial protection, (4) posts, 74" H, 18" W, 60" L, includes (2) "S" hooks per shelf, built in Microban® antimicrobial protection, KD

Item # _____

Job _____

METROMAX i™ POLYMER SHELVING

with *Microban Antimicrobial Product Protection

Part of the innovative MetroMax iQ™ Storage System, MetroMax i™ is a lifetime storage solution. The product is corrosion proof, easy to clean, strong like wire shelving, and provides a very efficient use of storage space. MetroMax i™ is integrated with online space planning tools and tutorials. **www.metro.com/iQ**

- **Lifelong performance and corrosion proof:** All-polymer and Type 304 stainless design offers a lifetime warranty against rust and corrosion.
- **Strong and Durable:** Strong as steel, MetroMax i™ shelves hold as much weight as Metro's wire shelving and are impact resistant. Weight capacity for evenly distributed loads:
  800 lbs. (363kg) per shelf for lengths of 24" to 48" (610 to 1220mm)
  600 lbs. (275kg) per shelf for lengths of 54" (1370mm) or longer
  2,000 lbs. (907kg) maximum per stationary unit.
- **Easiest to clean and maintain:** Smooth surfaces easily wipe clean. Polymer mats can be easily removed and cleaned in a sink or dish machine. Microban antimicrobial product protection is built into the high contact areas of the shelf including the mats, frames, and posts to protect the product from bacteria, mold, mildew, and fungus that cause odors and product degradation. Microban protection keeps the product "cleaner between cleanings".
- **Smooth, Protective Surfaces:** Smooth, flat surfaces protect packaged shelf contents from unwanted rips, tears, or damage.
- **Robust Open Grid and Solid Mat Options:** Open grid shelves promote air circulation and light penetration. One-piece solid mats contain spills and are ideal to protect items on the bottom shelf from dirt or backsplashes from cleaning floors. Shelf mats are sturdy and safely support concentrated loads from instrumentation and equipment.
- **Interchangeable:** Part of the MetroMax iQ™ Storage System, corrosion proof MetroMax i™ shelves and posts are compatible with corrosion resistant MetroMax Q™ shelves and posts.
- **Efficient, Organized Storage:** Premium MetroMax iQ™ accessories efficiently organize, contain, and compartmentalize ***all*** space between shelves.
- **Fast, Easy Assembly:** MetroMax i™ assembles easily in minutes, without tools. Shelves can be adjusted at 1" (25mm) increments along the post. Shelf wedges have a window to locate your desired position.

MetroMax i™ Mobile Unit

NSF

MetroMax i™ with Accessories

*MICROBAN® and the MICROBAN® symbol are registered trademarks of the Microban Products Company, Huntersville, NC.

InterMetro Industries Corporation
North Washington Street
Wilkes-Barre, PA 18705
www.metro.com

EMERSON

METRO MetroMax i™ Polymer Shelving

9.20

METROMAX i™ POLYMER SHELVING

Specifications

- **Longitudinal Beams and Posts:** Pultrusions — continuous glass fibers and thermoset resin composite with built-in Microban® antimicrobial product protection.
- **End Beams, Adjustable Foot and Socket:** Injection molded polyester thermoplastic resin with glass reinforcement
- **Shelf Wedge Connector:** reinforced nylon
- **Mats, Open and Solid:** Mineral reinforced polypropylene. Mats contain Microban® antimicrobial.
- **Post Cap and Center Beam Cap:** High-density polyethylene.
- **"S" Hook Tab Hole Plug:** Vinyl.
- **Collar and "S" Hook:** Type 304 Stainless Steel.
- **Bonding of Longitudinal Beams to End Beams:** High temperature polyamide adhesive and stainless steel screws.
- **Continuous Temperature —** MetroMax i™ can be used continuously within a range of -20/120° F (-29/49° C) with intermittent exposure to 212° F (100° C) for cleaning.

Standard Shelves

- Part number includes shelf with removable mats and one bag of wedges

Nominal Width (in.)	(mm)	Nominal Length (in.)	(mm)	Shelf with Grid Mat Model No.	Approx. Pkd. Wt. (lbs.)	(kg)	Shelf with Solid Mat Model No.	Approx. Pkd. Wt. (lbs.)	(kg)
18	457	24	610	MX1824G	8.7	4.0	MX1824F	12.7	5.8
18	457	30	760	MX1830G	10.5	4.7	MX1830F	14.5	6.6
18	457	36	914	MX1836G	12.2	5.5	MX1836F	17.2	7.8
18	457	42	1060	MX1842G	13.9	5.3	MX1842F	20.1	9.1
18	457	48	1220	MX1848G	15.7	7.1	MX1848F	23.1	10.5
18	457	54	1372	MX1854G	17.5	7.9	MX1854F	21.5	9.7
18	457	60	1524	MX1860G	19.2	8.7	MX1860F	23.2	10.5
18	457	72	1829	MX1872G	22.5	10.2	MX1872F	27.5	12.5
24	610	24	610	MX2424G	12.2	5.5	MX2424F	14.2	6.4
24	610	30	760	MX2430G	13.9	6.3	MX2430F	15.9	7.2
24	610	36	914	MX2436G	15.6	7.1	MX2436F	19.6	8.9
24	610	42	1060	MX2442G	17.5	7.9	MX2442F	21.5	9.8
24	610	48	1220	MX2448G	19.3	8.7	MX2448F	25.3	11.5
24	610	54	1372	MX2454G	21.0	9.5	MX2454F	25.0	11.3
24	610	60	1524	MX2460G	22.8	10.5	MX2460F	26.8	12.1
24	610	72	1829	MX2472G	26.0	11.8	MX2472F	31.0	14.1

Actual Dimensions:
Width: Add 1/4" (6mm) to nominal size.
Length: Subtract 9/32" (7mm) from nominal size.

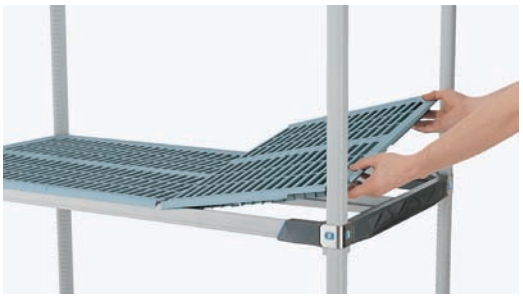

MetroMax i Open Grid Shelf

MetroMax i™ Solid Shelf

Heavy-Duty Dunnage Shelves

- Open grid and solid mat options.
- Compatible for use on MetroMax i™ and MetroMax Q shelving units.
- Weight capacity per shelf evenly distributed: 1,200 lbs. (544kg) on shelves up to and including 48" (1220mm) long; 900 lbs. (408kg) for shelves 60" (1524mm) long.
- Dunnage shelves are recommended for use on units with four posts, not as part of an add-on unit with two posts.

Nominal Width (in.)	(mm)	Nominal Length (in.)	(mm)	Shelf with Grid Mat Model No.	Approx. Pkd. Wt. (lbs.)	(kg)	Shelf with Solid Mat Model No.	Approx. Pkd. Wt. (lbs.)	(kg)
18	457	36	914	MHP1836G	18	8.2	MHP1836F	22	10.0
18	457	48	1220	MHP1848G	22	10.0	MHP1848F	26	11.8
18	457	60	1524	MHP1860G	26	11.8	MHP1860F	30	13.6
24	610	36	914	MHP2436G	21	9.5	MHP2436F	25	11.3
24	610	48	1220	MHP2448G	27	12.2	MHP2448F	31	14.1
24	610	60	1524	MHP2460G	33	15.0	MHP2460F	37	16.8

Heavy-Duty Dunnage Shelf

METROMAX i™ POLYMER SHELVING

Polymer Posts

- Corrosion proof with built-in Microban antimicrobial product protection.
- Compatible for use with MetroMax i™ and MetroMax Q shelves.
- Stationary posts include an adjustable leveling foot to compensate for uneven floors. Leveling foot can be adjusted 1" (25mm).
- When mounting a shelving unit to a dolly base, stationary posts are used.
- Special height cut posts are available. Consult your Metro representative.

Nominal Height (in.)	(mm)	Approx. Pkd. Wt. (lbs.)	(kg)	Stationary Post with Leveling Foot Model No.	Actual Height* (in.)	(mm)	Post for Stem Caster Model No.	Actual Height (in.)	(mm)
9	228	0.3	0.15				MX9UP	9 1/4	235
13	370	0.5	0.2	MX13P	14 3/4	375	MX13UP	13 3/4	349
27	685	0.9	0.4	MX27P	26 3/4	730	MX27UP	27 3/4	705
33	875	1.0	0.5	MX33P	34 3/4	883	MX33UP	33 3/4	857
54	1370	1.6	0.7	MX54P	54 3/4	1391	MX54UP	53 3/4	1365
63	1585	1.8	0.8	MX63P	62 3/4	1594	MX63UP	61 3/4	1568
74	1690	2.2	1.0	MX74P	74 3/4	1899	MX74UP	73 3/4	1873
86	2195	2.5	1.1	MX86P	86 3/4	2203	MX86UP	85 3/4	2178

Replacement Leveling Foot: Model No. RPM3-FOOT

Replacement Post Cap: Model No. RPMX3-POSTCAP

Replacement MetroMax i™ Wedges: Model No. MX9985 Bag of 4

Polymer Stationary Post

Replacement Shelf Wedges MX9985

NOTE: Compatibility with existing Metro polymer mat shelving systems
- MetroMax i™ is interchangeable with MetroMax Q shelves (manufactured within or after April 2009) and MetroMax Q posts.
- MetroMax i™ shelves, posts, and wedges are NOT compatible with original MetroMax shelves, posts, and wedges manufactured before April 2009.

Post Clamp

Adds stability by joining posts of two separate units together. With it, each unit is supported by four posts and buttressed by the adjacent unit.
Model No. 9994X

Foot Plate

Use to add stability to the shelving unit or to bolt units to the floor.
Model No. Zinc 9993Z
Model No. Stainless Steel 9993S

Stem Casters

A variety of stem casters are offered for MetroMax i™ mobile applications.
Stem caster models include bumpers.
See Catalog Sheet 11.20 for stem casters.

Load Rating: 3 x Stem Caster Load Rating, maximum — 900 lbs. (363kg) per stem caster cart.

Replacement Bumper M9992DBX

9.20

MetroMax i™ Polymer Shelving

Job _____

METROMAX i™ POLYMER SHELVING

Starter and Add-On Units

- 4- and 5-tier models available. Consult the Metro catalog for models.
- Starter units: consist of shelves and (4) posts
- Add-on units: consist of shelves, (2) posts, and "S" Hooks (M9995)

"S" Hook: Used to "add on" one or multiple MetroMax i™ storage systems while eliminating the cost of two posts per unit. Can be used to join units end-to-end, back-to-back, at right angles, etc. Two "S" hooks are required for each shelf.
Model No. M9995

MetroMax i™ Intermediate "S" Hook Kit: Includes one intermediate bracket (pictured) and two "S" hooks. Snaps onto front or back of MetroMax i™ shelf when joining units at right angles. Order one kit per shelf.
Model No. MX9996

- Regular "S" Hook location
- Intermediate bracket location
- Post
- Post not required

END-TO END
"S" Hooks
M9995 — qty. 2

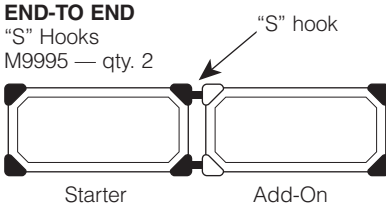

RIGHT ANGLES
Intermediate "S" Hook Kit
MX9996 — qty. 1

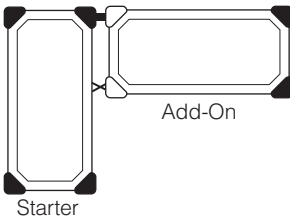

COMBINATION
Intermediate "S" Hook Kits
MX9996 — qty. 2

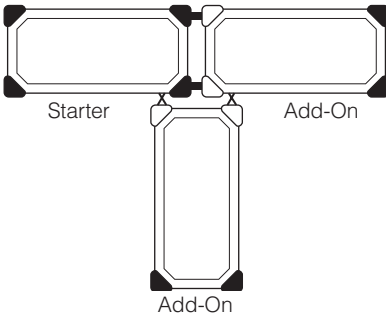

MetroMax i™ Carts

- 4- and 5-tier models
- All-grid and all-solid shelf models
- Units consist of shelves, (4) posts, (2) swivel, and (2) swivel brake casters.
- Consult the Metro catalog for models.

All Metro Catalog Sheets are available on our Web Site: **www.metro.com**

InterMetro Industries Corporation
North Washington Street, Wilkes-Barre, PA 18705
Phone: 570-825-2741
Fax: 570-825-2852

L02-177
Printed in U.S.A. 4/09

Information and specifications are subject to change without notice. Please confirm at time of order.

Copyright © 2009 InterMetro Industries Corp.

For Product Information:
U.S. and Canada: 1.800.433.2232
Latin America: 1.561.333.3824
Europe: +31.76.587.7550
Asia/Pacific: +65.6567.8003
Middle East/Africa: +971.4.811.8286

RJS | BARBER ASSOCIATES

RJS | Barber Associates

Integrated Food Service Design

9/6/2013

ITEM# 30-32 -

<Spare>

RJS | BARBER ASSOCIATES

RJS | Barber Associates

Integrated Food Service Design

9/6/2013

ITEM# 33 - PLASTIC WITH METAL FRAME SHELVING (4 REQ'D)

Metro MX1854G

MetroMax i™ Shelf, 18" W, 54" L, complete with frame, open-grid mat & (4) wedge connectors, built in Microban® antimicrobial product protection

ACCESSORIES

Mfr	Qty	Model	Spec
Metro	4	MX74P	MetroMax i™ Post, 74" H, for stationary use or with a dolly, adjustable leveling bolts, adjusts at 1" increments, corrosion proof all polymer construction with built in Microban® antimicrobial product protection

Item # _____

Job _____

METROMAX i™ POLYMER SHELVING

with *Microban Antimicrobial Product Protection

Part of the innovative MetroMax iQ™ Storage System, MetroMax i™ is a lifetime storage solution. The product is corrosion proof, easy to clean, strong like wire shelving, and provides a very efficient use of storage space. MetroMax i™ is integrated with online space planning tools and tutorials. **www.metro.com/iQ**

- **Lifelong performance and corrosion proof:** All-polymer and Type 304 stainless design offers a lifetime warranty against rust and corrosion.
- **Strong and Durable:** Strong as steel, MetroMax i™ shelves hold as much weight as Metro's wire shelving and are impact resistant. Weight capacity for evenly distributed loads:
  800 lbs. (363kg) per shelf for lengths of 24" to 48" (610 to 1220mm)
  600 lbs. (275kg) per shelf for lengths of 54" (1370mm) or longer
  2,000 lbs. (907kg) maximum per stationary unit.
- **Easiest to clean and maintain:** Smooth surfaces easily wipe clean. Polymer mats can be easily removed and cleaned in a sink or dish machine. Microban antimicrobial product protection is built into the high contact areas of the shelf including the mats, frames, and posts to protect the product from bacteria, mold, mildew, and fungus that cause odors and product degradation. Microban protection keeps the product "cleaner between cleanings".
- **Smooth, Protective Surfaces:** Smooth, flat surfaces protect packaged shelf contents from unwanted rips, tears, or damage.
- **Robust Open Grid and Solid Mat Options:** Open grid shelves promote air circulation and light penetration. One-piece solid mats contain spills and are ideal to protect items on the bottom shelf from dirt or backsplashes from cleaning floors. Shelf mats are sturdy and safely support concentrated loads from instrumentation and equipment.
- **Interchangeable:** Part of the MetroMax iQ™ Storage System, corrosion proof MetroMax i™ shelves and posts are compatible with corrosion resistant MetroMax Q™ shelves and posts.
- **Efficient, Organized Storage:** Premium MetroMax iQ™ accessories efficiently organize, contain, and compartmentalize ***all*** space between shelves.
- **Fast, Easy Assembly:** MetroMax i™ assembles easily in minutes, without tools. Shelves can be adjusted at 1" (25mm) increments along the post. Shelf wedges have a window to locate your desired position.

MetroMax i™ Mobile Unit

NSF

MetroMax i™ with Accessories

*MICROBAN® and the MICROBAN® symbol are registered trademarks of the Microban Products Company, Huntersville, NC.

InterMetro Industries Corporation
North Washington Street
Wilkes-Barre, PA 18705
www.metro.com

EMERSON

METRO MetroMax i™ Polymer Shelving

9.20

METROMAX i™ POLYMER SHELVING

Specifications

- **Longitudinal Beams and Posts:** Pultrusions — continuous glass fibers and thermoset resin composite with built-in Microban® antimicrobial product protection.
- **End Beams, Adjustable Foot and Socket:** Injection molded polyester thermoplastic resin with glass reinforcement
- **Shelf Wedge Connector:** reinforced nylon
- **Mats, Open and Solid:** Mineral reinforced polypropylene. Mats contain Microban® antimicrobial.
- **Post Cap and Center Beam Cap:** High-density polyethylene.
- **"S" Hook Tab Hole Plug:** Vinyl.
- **Collar and "S" Hook:** Type 304 Stainless Steel.
- **Bonding of Longitudinal Beams to End Beams:** High temperature polyamide adhesive and stainless steel screws.
- **Continuous Temperature —** MetroMax i™ can be used continuously within a range of -20/120° F (-29/49° C) with intermittent exposure to 212° F (100° C) for cleaning.

Standard Shelves

- Part number includes shelf with removable mats and one bag of wedges

Nominal Width (in.)	(mm)	Nominal Length (in.)	(mm)	Shelf with Grid Mat Model No.	Approx. Pkd. Wt. (lbs.)	(kg)	Shelf with Solid Mat Model No.	Approx. Pkd. Wt. (lbs.)	(kg)
18	457	24	610	MX1824G	8.7	4.0	MX1824F	12.7	5.8
18	457	30	760	MX1830G	10.5	4.7	MX1830F	14.5	6.6
18	457	36	914	MX1836G	12.2	5.5	MX1836F	17.2	7.8
18	457	42	1060	MX1842G	13.9	5.3	MX1842F	20.1	9.1
18	457	48	1220	MX1848G	15.7	7.1	MX1848F	23.1	10.5
18	457	54	1372	MX1854G	17.5	7.9	MX1854F	21.5	9.7
18	457	60	1524	MX1860G	19.2	8.7	MX1860F	23.2	10.5
18	457	72	1829	MX1872G	22.5	10.2	MX1872F	27.5	12.5
24	610	24	610	MX2424G	12.2	5.5	MX2424F	14.2	6.4
24	610	30	760	MX2430G	13.9	6.3	MX2430F	15.9	7.2
24	610	36	914	MX2436G	15.6	7.1	MX2436F	19.6	8.9
24	610	42	1060	MX2442G	17.5	7.9	MX2442F	21.5	9.8
24	610	48	1220	MX2448G	19.3	8.7	MX2448F	25.3	11.5
24	610	54	1372	MX2454G	21.0	9.5	MX2454F	25.0	11.3
24	610	60	1524	MX2460G	22.8	10.5	MX2460F	26.8	12.1
24	610	72	1829	MX2472G	26.0	11.8	MX2472F	31.0	14.1

Actual Dimensions:
Width: Add 1/4" (6mm) to nominal size.
Length: Subtract 9/32" (7mm) from nominal size.

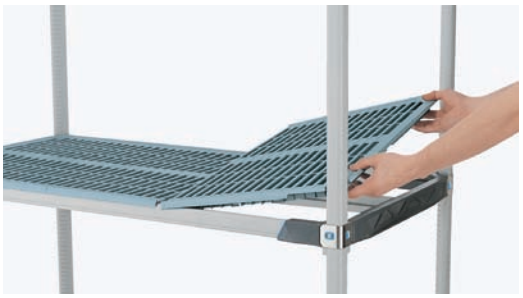

MetroMax i Open Grid Shelf

MetroMax i™ Solid Shelf

Heavy-Duty Dunnage Shelves

- Open grid and solid mat options.
- Compatible for use on MetroMax i™ and MetroMax Q shelving units.
- Weight capacity per shelf evenly distributed: 1,200 lbs. (544kg) on shelves up to and including 48" (1220mm) long; 900 lbs. (408kg) for shelves 60" (1524mm) long.
- Dunnage shelves are recommended for use on units with four posts, not as part of an add-on unit with two posts.

Nominal Width (in.)	(mm)	Nominal Length (in.)	(mm)	Shelf with Grid Mat Model No.	Approx. Pkd. Wt. (lbs.)	(kg)	Shelf with Solid Mat Model No.	Approx. Pkd. Wt. (lbs.)	(kg)
18	457	36	914	MHP1836G	18	8.2	MHP1836F	22	10.0
18	457	48	1220	MHP1848G	22	10.0	MHP1848F	26	11.8
18	457	60	1524	MHP1860G	26	11.8	MHP1860F	30	13.6
24	610	36	914	MHP2436G	21	9.5	MHP2436F	25	11.3
24	610	48	1220	MHP2448G	27	12.2	MHP2448F	31	14.1
24	610	60	1524	MHP2460G	33	15.0	MHP2460F	37	16.8

Heavy-Duty Dunnage Shelf

METROMAX i™ POLYMER SHELVING

Polymer Posts

- Corrosion proof with built-in Microban antimicrobial product protection.
- Compatible for use with MetroMax i™ and MetroMax Q shelves.
- Stationary posts include an adjustable leveling foot to compensate for uneven floors. Leveling foot can be adjusted 1" (25mm).
- When mounting a shelving unit to a dolly base, stationary posts are used.
- Special height cut posts are available. Consult your Metro representative.

Nominal Height (in.)	(mm)	Approx. Pkd. Wt. (lbs.)	(kg)	Stationary Post with Leveling Foot Model No.	Actual Height* (in.)	(mm)	Post for Stem Caster Model No.	Actual Height (in.)	(mm)
9	228	0.3	0.15				MX9UP	9 1/4	235
13	370	0.5	0.2	MX13P	14 3/4	375	MX13UP	13 3/4	349
27	685	0.9	0.4	MX27P	26 3/4	730	MX27UP	27 3/4	705
33	875	1.0	0.5	MX33P	34 3/4	883	MX33UP	33 3/4	857
54	1370	1.6	0.7	MX54P	54 3/4	1391	MX54UP	53 3/4	1365
63	1585	1.8	0.8	MX63P	62 3/4	1594	MX63UP	61 3/4	1568
74	1690	2.2	1.0	MX74P	74 3/4	1899	MX74UP	73 3/4	1873
86	2195	2.5	1.1	MX86P	86 3/4	2203	MX86UP	85 3/4	2178

Replacement Leveling Foot: Model No. RPM3-FOOT

Replacement Post Cap: Model No. RPMX3-POSTCAP

Replacement MetroMax i™ Wedges: Model No. MX9985 Bag of 4

Polymer Stationary Post

Replacement Shelf Wedges MX9985

NOTE: Compatibility with existing Metro polymer mat shelving systems
- MetroMax i™ is interchangeable with MetroMax Q shelves (manufactured within or after April 2009) and MetroMax Q posts.
- MetroMax i™ shelves, posts, and wedges are NOT compatible with original MetroMax shelves, posts, and wedges manufactured before April 2009.

Post Clamp

Adds stability by joining posts of two separate units together. With it, each unit is supported by four posts and buttressed by the adjacent unit.
Model No. 9994X

Foot Plate

Use to add stability to the shelving unit or to bolt units to the floor.
Model No. Zinc 9993Z
Model No. Stainless Steel 9993S

Stem Casters

A variety of stem casters are offered for MetroMax i™ mobile applications.
Stem caster models include bumpers.
See Catalog Sheet 11.20 for stem casters.

Load Rating: 3 x Stem Caster Load Rating, maximum — 900 lbs. (363kg) per stem caster cart.

Replacement Bumper M9992DBX

9.20

Job _____

METROMAX i™ POLYMER SHELVING

Starter and Add-On Units

- 4- and 5-tier models available. Consult the Metro catalog for models.
- Starter units: consist of shelves and (4) posts
- Add-on units: consist of shelves, (2) posts, and "S" Hooks (M9995)

"S" Hook: Used to "add on" one or multiple MetroMax i™ storage systems while eliminating the cost of two posts per unit. Can be used to join units end-to-end, back-to-back, at right angles, etc. Two "S" hooks are required for each shelf.
Model No. M9995

MetroMax i™ Intermediate "S" Hook Kit: Includes one intermediate bracket (pictured) and two "S" hooks. Snaps onto front or back of MetroMax i™ shelf when joining units at right angles. Order one kit per shelf.
Model No. MX9996

- Regular "S" Hook location
- Intermediate bracket location
- Post
- Post not required

END-TO END
"S" Hooks
M9995 — qty. 2

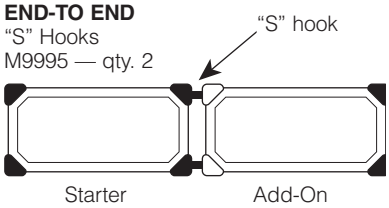

RIGHT ANGLES
Intermediate "S" Hook Kit
MX9996 — qty. 1

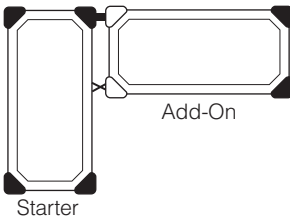

COMBINATION
Intermediate "S" Hook Kits
MX9996 — qty. 2

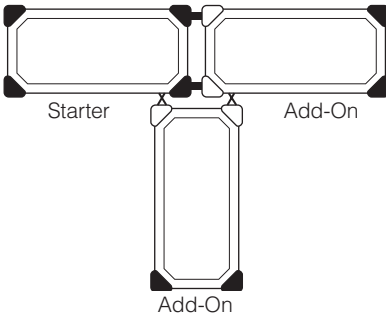

MetroMax i™ Carts

- 4- and 5-tier models
- All-grid and all-solid shelf models
- Units consist of shelves, (4) posts, (2) swivel, and (2) swivel brake casters.
- Consult the Metro catalog for models.

All Metro Catalog Sheets are available on our Web Site: **www.metro.com**

InterMetro Industries Corporation
North Washington Street, Wilkes-Barre, PA 18705
Phone: 570-825-2741
Fax: 570-825-2852

L02-177
Printed in U.S.A. 4/09

Information and specifications are subject to change without notice. Please confirm at time of order.

Copyright © 2009 InterMetro Industries Corp.

For Product Information:
U.S. and Canada: 1.800.433.2232
Latin America: 1.561.333.3824
Europe: +31.76.587.7550
Asia/Pacific: +65.6567.8003
Middle East/Africa: +971.4.811.8286

METRO® MetroMax i™ Polymer Shelving

RJS | BARBER ASSOCIATES

RJS | Barber Associates

Integrated Food Service Design

9/6/2013

ITEM# 34A - SNEEZE GUARD (1 REQ'D)

Custom CUSTOM

SNEEZE GUARD

<Included>

WATER

	HOT SIZE	HOT AFF	HOT GPH	COLD SIZE	COLD AFF	FILTERED SIZE	FILTERED AFF	CONDENSER INLET SIZE	CONDENSER OUTLET SIZE
1									

WASTE

	INDIRECT SIZE	DIRECT SIZE
1	1"	

RJS | BARBER ASSOCIATES

RJS | Barber Associates

Integrated Food Service Design

9/6/2013

ITEM# 34B - DROP-IN FROST TOP (1 REQ'D)

Atlas Metal WF-4

Frost Top Drop-In Unit, refrigerated unit, self-contained refrigeration system, 19-1/2" x 52-3/4" x 1" stainless steel frost top, galvanized steel outer liner, with on/off switch and pilot light, 1"IPS drain, 1/3 HP

ACCESSORIES

Mfr	Qty	Model	Spec
Atlas Metal	1		NOTE: A 1" IPS drain & valve is provided
Atlas Metal	1		120v/60/1-ph, 1/3 hp, 9.8 amps, NEMA 5-15P, standard

ELECTRICAL

	VOLTS	CYCLE	PHASE	CONN	AFF	NEMA	AMPS	KW	HP	MCA	MOCP
1	120	60	1			5-15P	9.8	1.176	1/3		

ELECTRICAL 1 REMARKS

6 ft cord

WATER

	HOT SIZE	HOT AFF	HOT GPH	COLD SIZE	COLD AFF	FILTERED SIZE	FILTERED AFF	CONDENSER INLET SIZE	CONDENSER OUTLET SIZE
1									

WASTE

	INDIRECT SIZE	DIRECT SIZE
1	1"	

Atlas Metal
INDUSTRIES, INC.
A subsidiary of Mercury Aircraft, Inc
1135 N.W. 159th DRIVE, MIAMI, FLORIDA 33169
TEL.: (305) 625-2451 TOLL FREE (800) 762-7565 FAX: (305) 623-0475
Web Page: www.atlasfoodserv.com E-Mail: sales@atlasfoodserv.com

Project: _____
Item No.: _____
Quantity: _____

DROP-IN SERVING EQUIPMENT

FROST TOP

Refrigerated,
Self-Contained

- ☐ WF-2
- ☐ WF-3
- ☐ WF-4
- ☐ WF-5
- ☐ WF-6

SPECIFICATIONS

TOP: Constructed of 14 gauge, type 304 stainless steel, die stamped with a raised perimeter bead. There shall be a solid vinyl gasket under the beaded edge to form a seal to the counter top, thus preventing seepage or marring of the counter top.

FROST TOP: Constructed of 14 gauge, type 304 stainless steel, one piece construction, all welded, ground and polished to a uniform finish. The top is formed to stand 1" above the counter top and is provided with a 1/2" full perimeter gutter to collect condensation; a 1" I.P.S. drain is provided. The frost top has copper tubing firmly soldered to the exterior bottom.

INSULATION: The pan is fully insulated with high density fiberglass and polystyrene, 1-1/2" thick, and enclosed with an 18 gauge galvanized steel outer case.

REFRIGERATION SYSTEM: The compressor housing shall be fabricated from 14 gauge galvanized steel and bolted to the base of the unit. A fully self-contained condensing unit is provided with a hermetically sealed compressor. The system is fully charged with CFC free refrigerant and ready to operate.

NOTE: Proper ventilation must be provided in counter.

ELECTRICAL: The unit will be wired for 15 amps., 120 volt, single phase operation with an on/off switch and pilot light. A 6' long 3-wire cord and plug (NEMA 5-15P) will be provided.

Specifications subject to change without notice.

STANDARD FEATURES

- "Quick" frost top, stands 1" above counter for attractive display - ideal for pre-plated cold food
- Fully insulated for maximum efficiency and energy savings
- Factory applied gasket - makes installation a snap and seals units to the counter top, thus eliminating seepage
- 1-Year Parts & Labor Warranty
- NSF Certified and UL Recognized

ACCESSORIES

- **5YW** - 5-Year Compressor Warranty
- **WFFT** - Flush recessed top for frost top units
- **RS** - Remote on/off switch for counter mounting
- **RDVE** - Rear Drain Valve Extension
- *** 220 Volt - 50 Cycle** Compressor

*** Units with these accessories are <u>not</u> currently UL listed.**

DI-37

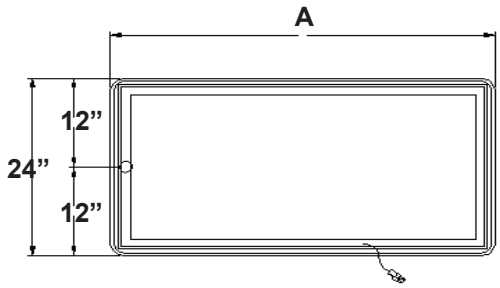

PLAN VIEW

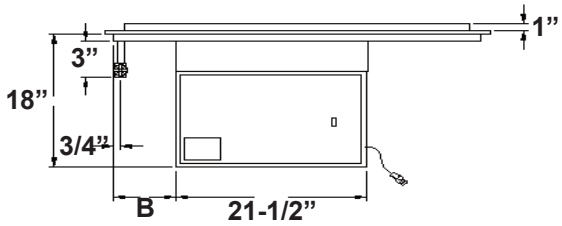

ELEVATION

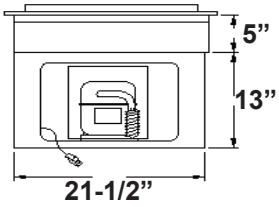

END VIEW

MODEL	“A”	“B”	FROST TOP SIZE	ELECTRICAL CHARACTERISTICS	CUT-OUT REQUIRED	SHIP WT. (LBS.)
WF-2	29-3/4” *(75.5cm)*	6” *(15.2cm)*	19-1/2” X 25-1/4” *(49.5 X 64.1cm)*	3.9amps. - 120V - 1/5HP	22-1/4” X 28” *(56.5 X 71.1cm)*	171 *(77.6kg)*
WF-3	43-1/2” *(110.4cm)*	7” *(17.7cm)*	19-1/2” X 39” *(49.5 X 99cm)*	6.8amps. - 120V - 1/4HP	22-1/4” X 41-3/4” *(56.5 X 106cm)*	207 *(93.9kg)*
WF-4	57-1/4” *(145.4cm)*	7” *(17.7cm)*	19-1/2” X 52-3/4” *(49.5 X 133.9cm)*	9.8amps. - 120V - 1/3HP	22-1/4” X 55-1/2” *(56.5 X 140.9cm)*	236 *(107kg)*
WF-5	71” *(180.3cm)*	7” *(17.7cm)*	19-1/2” X 66-1/2” *(49.5 X 168.9cm)*	9.8amps. - 120V - 1/3HP	22-1/4” X 69-1/4” *(56.5 X 175.8cm)*	263 *(119.3kg)*
WF-6	84-3/4” *(215.2cm)*	7” *(17.7cm)*	19-1/2” X 80-1/4” *(49.5 X 203.8cm)*	10.7amps. - 120V - 1/2HP	22-1/4” X 83” *(56.5 X 210.8cm)*	328 *(148.8kg)*

REFRIGERATION CHART

MODEL	HP	REF.	OZ.	LOW PSIG.	HIGH PSIG.	BTU M10 90A
WF-2	1/5	134A	6	8	150	505
WF-3	1/4	134A	8	8	155	1070
WF-4	1/3	134A	10	8	155	1285
WF-5	1/3	134A	12	8	155	1285
WF-6	1/2	134A	16	8	160	2140

MODEL	WT. LESS COMP. (LBS.)
WFX-2	130 *(59kg)*
WFX-3	160 *(72.6kg)*
WFX-4	190 *(86.2kg)*
WFX-5	217 *(98.4kg)*
WFX-6	252 *(114.3kg)*

WFX - REFRIGERATED FROST TOP WITHOUT COMPRESSOR

Units include Refrigerated Frost Top, Thermostat, Cap Tube & Drier (for hook up in field by others)

COMPRESSORS FOR REMOTE INSTALLATIONS

2029 - 1/5 HP for WFX-2
2029-1 - 1/4 HP for WFX-3
2029-2 - 1/3 HP for WFX-4 & 5
2001-4 - 1/2 HP for WFX-6

Atlas Metal Industries ● 1135 NW 159th Dr. Miami, Fl 33169 ● (800) 762-7565 Fax: (305) 623-0475 ● atlasfoodserv.com

RJS | BARBER ASSOCIATES

RJS | Barber Associates

Integrated Food Service Design

9/6/2013

ITEM# 34C - COLD SERVING COUNTER (1 REQ'D)
Multiteria CLS96 COLD
Multiteria CLS96-MOD114 Cold Food Counter

Counter body to be as specified for item 34.1.

Top to be 114” long x 34" wide and as specified for item 34.1.

(Item 34B) Atlas WF-4 drop-in frost top, self-contained refrigeration, 19-1/2” x 52-3/4” x 1”, 14 gauge 304 stainless steel frost top, galvanized steel outer liner, vinyl gasket under beaded edge, with remote on/off switch flush mounted in counter apron, and pilot light, ½” drain, 6’ long NEMA 5-15P cord and plug. Furnished and installed into counter by Multiteria.

Provide stainless steel hinged louvered doors on operator side at compressor housing to allow for ease of service.

(Item 34C) Two-tier display shelf, in (2) sections. (1) section to span frost top, and other section to cover remaining length of counter. Each tier and section to have 3/8” clear tempered glass shelf and 6” adjustable 1/4” clear tempered front glass. The first tier to be 14” above countertop, and the second tier to be 12” above first. LED lighting to be under each tier in each section, and a glass end panel to be at each end. Unit fabricated from 1” x 2” front supports. All posts, brackets and hardware to be black powder coated. Power switch for lighting mounted in counter apron.

Signage overstructure to be as specified for item 34.1.

Counter to have NEMA 5-15R receptacle mounted in counter base with 8’ cord and NEMA 5-20P plug.

Operator side of counter to be open storage as specified for item 34.1.

Flat stainless steel work shelf to be as specified for item 34.1.

Tray slide to be as specified for item 34.1.

Counter to have laminate panels as specified for item 34.1 with louvers as required.

Provide with Tightlink interlocking mechanism between counter units.

Black powder coated toe base mounted on 16 gauge stainless steel “Z” bracket at front of counter and ends where required.

RJS | BARBER ASSOCIATES

RJS | Barber Associates

Integrated Food Service Design

9/6/2013

ITEM# 34C - SNEEZE GUARD (1 REQ'D)

Custom CUSTOM

SNEEZE GUARD

RJS | BARBER ASSOCIATES

RJS | Barber Associates

Integrated Food Service Design

9/6/2013

ITEM# 34D - DROP-IN HOT WELL (1 REQ'D)

Wells MOD-400TDM/AF

Food Warmer, top-mount, built-in, electric, auto-fill, (4) 12" x 20" openings with manifolded drains with one valve, wet/dry operation, double control panel, thermostatic control, stainless steel interior, insulated aluminum steel housing, 1240with 1650w, NSF, UL, CSA

ACCESSORIES

Mfr	Qty	Model	Spec
Wells	1		Limited 2 year parts & 1 year labor warranty, standard
Wells	1	21923	208/240v/60/3-ph, 4.96/6.6kw, 14.5/17.8 amps, direct (field convertible to single phase)

ELECTRICAL

	VOLTS	CYCLE	PHASE	CONN	AFF	NEMA	AMPS	KW	HP	MCA	MOCP
1	208/240	60	3	Direct			14.5/17.8	4.96/6.6			

WATER

	HOT SIZE	HOT AFF	HOT GPH	COLD SIZE	COLD AFF	FILTERED SIZE	FILTERED AFF	CONDENSER INLET SIZE	CONDENSER OUTLET SIZE
1				1/4"					

WASTE

	INDIRECT SIZE	DIRECT SIZE
1	1"	

Over 90 Years Of Quality Foodservice Products And Service

Job_____ Item No. _____

MOD400 Series 12" X 20" Four-Well Heavy Duty, Top-Mount, Rectangular Drop-In Food-Warmers

MOD400

MOD400TDMAF with dual control panels

DESCRIPTION

Wells heavy-duty, top-mount, drop-in, Modular food warmers are designed to hold heated foods at safe and fresh serving temperatures. Wells MOD400 Series accommodates four 12" X 20"standard food pans or equivalent fractional inset pans and are designed for wet or dry operation

SPECIFICATIONS

Construction – One-piece stainless steel top flange and heavy-gauge, deep-drawn stainless steel warming pans are standard features on all models. Wellsloks are standard for quick and easy installation.

Insulation – Sides, front, back and bottom are fully insulated for energy savings, efficiency, quicker pre-heat and faster recovery.

Controls & Heating- Individual controls for each well provide maximum versatility. Models with thermostatic or infinite controls are available. High-limits prevent overheating. Temperature-ready indicator lights are standard on all control types. Powerful tubular heating elements are located under the warming pans for quick and efficient heating and for even heat distribution.

Additional Features Available

- Auto water-fill to maintain proper water level.
- Select models are field convertible from 3Ø to 1Ø
- Drains
- Drains with manifolds
- Infinite or thermostatic controls

STANDARD FEATURES

❏ Accommodates four 12" X 20" standard inset pans or equivalent fractional pans
❏ One-piece stainless steel top flange and heavy-gauge, deep-drawn stainless steel warming pans
❏ Suitable for wet or dry operation (wet recommended for best results)
❏ Energy-saving fully-insulated construction
❏ Fully Insulated models are perfect for non-metal counters
❏ Thermostatic or infinite controls
❏ Separate controls for each individual wells
❏ High limits prevent overheating
❏ Thermostatic controls are recessed in a one-piece, drawn, front-mounted panel
❏ Wellslok standard for ease of installation
❏ Powerful tubular heating elements
❏ ½" drains and manifolds available
❏ 2-Year Limited Parts & 1-Year Limited Labor Warranty

OPTIONS & ACCESSORIES

❏ Adaptor tops for round insets
❏ Inset with lid
❏ 8oz. soup ladle
❏ Drain value extension kit
❏ Drain screens
❏ Wellslok extension kits for wood counter installations
❏ Optional 72"wiring
❏ Autofill models with single or double control panels

CERTIFICATIONS

Sheet No. MOD4-09/12

Wells Bloomfield • 10 Sunnen Dr. St. Louis, MO 63143 U.S.A.
Phone : (314) 678-6314 • Fax (314) 781-5445
www.wellsbloomfield.com © 2012 Wells Bloomfield • Printed in the U.S.A.

NOTE: Specifications are subject to change without notice and are not intended for installation purposes. See installation instructions prior to installing the unit.

Over 90 Years Of Quality Foodservice Products And Service

MOD400 Series 12" X 20" Four-Well Heavy Duty, Top-Mount, Rectangular Drop-In Food-Warmers

NOTE: Specifications are subject to change without notice and are not intended for installation purposes. See installation instructions prior to installing the unit.

DIMENSIONS: INCH (MM)

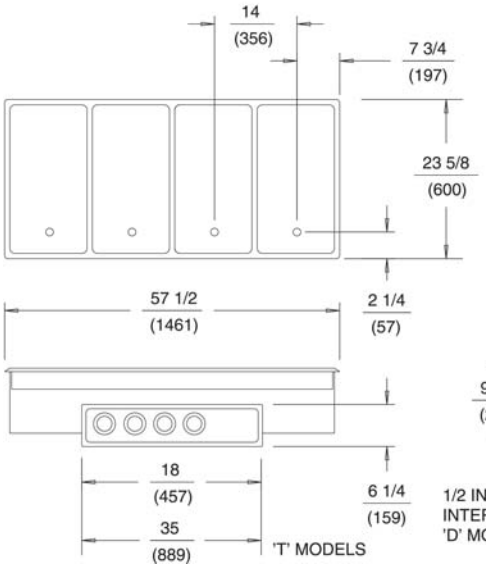

MINIMUM CLEARANCE REQUIRED FROM UNIT TO THE NEAREST SURFACE.			
BACK	SIDE	BOTTOM	FRONT
1 (25)	1 (25)	6 3/4 (171)	6 (152)

Single Control Panel

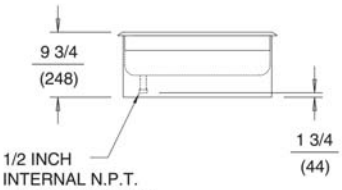

Two Control Panels

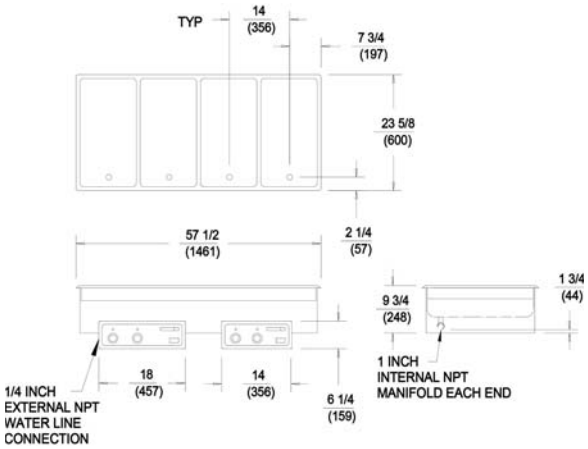

SPECIFICATIONS

Model Number	Description	Volts	Watts Per Well	Phase	Standard Power Cord Supply	OVERALL Width Left to Right Inches (MM)	OVERALL Length Front to Back Inches (MM)	OVERALL Height Inches (MM)	CONTROL PANEL Width Front to Back Inches (MM)	CONTROL PANEL Height Left to Right Inches (MM)	Shipping Weights Pounds (KG)	Crate Size Cubic Feet (Cubic Meters)	Approvals
MOD400*	Infinite Controls no Drains	208/240V	900/1200	3Ø*	NONE	57-1/2 (1461)	23-5/8 (600)	9-3/4 (248)	18 (457)	6-1/4 (159)	95 (43.18)	13.56 (0.298)	NSF UL
MOD400CSA*	Infinite Controls no Drains	208V 240V	700 1200	3Ø*	NONE	57-1/2 (1461)	23-5/8 (600)	9-3/4 (248)	18 (457)	6-1/4 (159)	95 (43.18)	13.56 (0.298)	NSF SP
MOD400D*	Infinite Controls with Drains	208/240V	900/1200	3Ø*	NONE	57-1/2 (1461)	23-5/8 (600)	9-3/4 (248)	18 (457)	6-1/4 (159)	98 (44.55)	13.56 (0.298)	NSF UL
MOD400DM*	Infante Controls with Drains & Manifold	208/240V	900/1200	3Ø*	NONE	57-1/2 (1461)	23-5/8 (600)	9-3/4 (248)	18 (457)	6-1/4 (159)	98 (44.55)	13.56 (0.298)	NSF UL
MOD400T*	Thermostatic Controls no Drains	208/240V	1240/1650	3Ø*	NONE	57-1/2 (1461)	23-5/8 (600)	9-3/4 (248)	35 (889)	6-1/4 (159)	98 (44.55)	13.56 (0.298)	NSF UL
MOD400TD*	Thermostatic Controls with Drains	208/240V	1240/1650	3Ø*	NONE	57-1/2 (1461)	23-5/8 (600)	9-3/4 (248)	35 (889)	6-1/4 (159)	105 (47.73)	13.56 (0.298)	NSF UL
MOD400TDM*	Thermostatic Controls with Drains & Manifold	208/240V	1240/1650	3Ø*	NONE	57-1/2 (1461)	23-5/8 (600)	9-3/4 (248)	35 (889)	6-1/4 (159)	105 (47.73)	13.56 (0.298)	NSF UL
MOD400TDMAF* Dual Control Panel	Thermostatic Controls with Drains, Manifold & Auto-Fill	208/240V	1240/1650	3Ø*	NONE	57-1/2 (1461)	23-5/8 (600)	9-3/4 (248)	18 & 14 (457) & (356)	6-1/4 (159)	112 (50.91)	13.56 (0.298)	NSF UL
MOD400TDMAFS* Single Control Panel	Thermostatic Controls with Drains, Manifold, Auto-Fill & Single Control Panel	208/240V	1240/1650 (6.0/6.9)	3Ø*	NONE	57-1/2 (1461)	23-5/8 (600)	9-3/4 (248)	35-1/6 (891)	6-1/4 (159)	112 (50.91)	13.56 (0.298)	NSF UL

* All MOD400's ship 3Ø and are field convertible to 1Ø

AutoFill models require a water connection. Please refer to the operator's manual and installation instructions for details.

Due to periodic changes in designs, methods, procedures, policies and regulations, the specifications contained in this sheet are subject to change without notice. While Wells exercises good faith efforts to provide information that is accurate, we are not responsible for errors or omissions in information provided or conclusions reached as a result of using the specifications. By using the information provided, the user assumes all risks in connection with such use.

Wells Bloomfield • 10 Sunnen Dr. St. Louis, MO 63143 U.S.A.
Phone : (314) 678-6314 • Fax (314) 781-5445
www.wellsbloomfield.com © 2012 Wells Bloomfield • Printed in the U.S.A.

NOTE: Specifications are subject to change without notice and are not intended for installation purposes. See installation instructions prior to installing the unit.

RJS | BARBER ASSOCIATES

RJS | Barber Associates

Integrated Food Service Design

9/6/2013

ITEM# 34H - HOT SERVING COUNTER (1 REQ'D)

Multiteria HLS66 HOT

Multiteria HLS66 Hot Food Counter

Counter body, size and shape as shown on drawing, to be constructed with 1” x 1”, 16 gauge tubular stainless steel to create a heavy duty base frame. Horizontal and vertical frame work joints to be welded, ground and polished. Stainless steel apron to be provided on operator side to mount controls. Frame work to incorporate stainless steel channel at front and ends to accept laminate panels and Tightlink fastening system. Unit to have removable 18” gauge stainless steel undershelf and 6” stainless steel legs with adjustable bullet feet.

Top to be 34" wide x 66” long and fabricated from a minimum of 14 gauge - 300 series stainless steel with 1-1/2” square turndown on all sides with corners fully welded, ground and polished. Top shall include stainless steel support channels where required and shall be mounted at 34” above finished floor. Verify height.

(Item #34D) Wells MOD-400TDM/AF food warmer, top mount, auto-fill with ¼” inlet, (4) 12” x 20” deep drawn stainless steel wells with manifolded drains with one valve, wet operation, single control panel flush mounted in counter apron, thermostatic controls with each well individually controlled, stainless steel interior, insulated aluminum steel housing. Furnished and installed into counter by Multiteria.

(Item 34C) Convertible operator service to self service food shield to cover length of counter, with top shelf, heat strip and LED lighting. 3/8” clear tempered glass shelf, front glass and (2) glass end panels. 1” x 2” supports. All posts, brackets and hardware to be black powder coated. Power switch for lighting mounted in counter apron.

Signage overstructure consisting of 1” x 2” vertical support posts, with 18 gauge, matte black powder coated, radius formed canopy with ½” dia stainless steel cross struts welded to top of support posts. Canopy to cover length of counter. Overall height of overstructure to be 8’ 0” A.F.F. Verify height requirements. 16” dia single sided sign, graphics to be determined, to be framed in 16” dia matte silver anodized signholder mounted to overstructure with fixed rods and rotating connectors.

Operator side of counter to be open storage compartment made from 18 gauge 300 series stainless steel.

Flat stainless steel work shelf, the length of counter and 8” wide to be mounted on the operator side on fold-down brackets. Top to be flush with counter top.

Counter to be provided with electrical junction box mounted in base cabinet and wired to 8’-0” cord and NEMA L21-30P for hot food wells, heat lamp and lights.

Tray slide to be solid surface material, LG Hausys or Corian from categories A, B or C, with (3) stainless steel runners and 1-1/2” square turndown and shall be mounted at 30” A.F.F. on stainless steel fold-down brackets. Tray slide to be size and shape as shown on drawing.

Counter to have front, back and end panels where required. Panels shall be ¾” thick MDO, with standard laminates from Wilsonart or Formica on front of panels, and shall have matching vinyl edge banding and 20 gauge 430 stainless steel backer material screwed on panel back. Front panels shall be stationary at the top 8” for mounting tray slide, and shall be detachable at the bottom 18” with “Z” clips for convenient front access of plumbing and electrical connections. End panels shall be removable without the use of tools.

Provide 1” stainless steel strip at corner of counter on operator’s left as shown on drawing.

Provide with Tightlink interlocking mechanism between counter units.

Black powder coated toe base mounted on 16 gauge stainless steel “Z” bracket at front of counter and ends where required.

RJS | BARBER ASSOCIATES

RJS | Barber Associates

Integrated Food Service Design

9/6/2013

ITEM# 35 - CASHIER STATION (1 REQ'D)
Multiteria DTS
Multiteria CS30 Cashier Counter

Counter body to be as specified for item 34.1 with end to be open for cashier with ADA clearances, with undershelf to be recessed 19” for ADA clearance as shown on drawing. Back of counter to have stainless steel panel.

Top to be 30” long x 34-1/2" wide and as specified for item 34.1.

Provide with grommet hole in top as shown on drawing.

Counter to have NEMA 5-15R GFCI receptacle mounted in cabinet base, pre-wired to 8’ cord and NEMA 5-15P plug.

Counter to have (1) empty data cabling box with stainless steel cover plate mounted in cabinet base.

Inside of cabinet base to be lined in stainless steel.

Tray slide to be as specified for item 34.1.

Counter to have laminate panels as specified for item 34.1.

Provide 1” stainless steel strip at corner of counter on operator’s right as shown on drawing.

Black powder coated toe base mounted on 16 gauge stainless steel “Z” bracket at front of counter and sides where required.

ELECTRICAL

	VOLTS	CYCLE	PHASE	CONN	AFF	NEMA	AMPS	KW	HP	MCA	MOCP
1	120/1			Cord & Plug			15.0				

RJS | BARBER ASSOCIATES

RJS | Barber Associates

Integrated Food Service Design

9/6/2013

ITEM# 36 - CHEST FREEZER (1 REQ'D)

By Owner TFM-41AL

Horizontal Freezer, -10° holding temp., tempered, hard coated, "Low-E glass, (2) angled sliding lids, 1/4 hp, 115v/60/1, 2.5 amps, 9' cord, NEMA 5-15P, cUL, NSF,

<Existing>

ELECTRICAL

	VOLTS	CYCLE	PHASE	CONN	AFF	NEMA	AMPS	KW	HP	MCA	MOCP
1	115	60	1	Cord & Plug	6.0"	5-15P	2.5			15	

RJS | BARBER ASSOCIATES

RJS | Barber Associates

Integrated Food Service Design

9/6/2013

ITEM# 37 - MILK COOLER (1 REQ'D)

By Owner EXISTING

MILK COOLER

ELECTRICAL

	VOLTS	CYCLE	PHASE	CONN	AFF	NEMA	AMPS	KW	HP	MCA	MOCP
1	115	60	1								

WATER

	HOT SIZE	HOT AFF	HOT GPH	COLD SIZE	COLD AFF	FILTERED SIZE	FILTERED AFF	CONDENSER INLET SIZE	CONDENSER OUTLET SIZE
1									

WASTE

	INDIRECT SIZE	DIRECT SIZE
1	1"	

SECTION 116623 - GYMNASIUM EQUIPMENT

PART 1 - GENERAL

1.1 RELATED DOCUMENTS

A. Drawings and general provisions of the Contract, including General and Supplementary Conditions and Division 01 Specification Sections, apply to this Section.

1.2 SUMMARY

A. This Section includes the following gymnasium equipment:

1. Basketball equipment.
2. Safety pads.
3. Electronic scoreboard.

B. Related Sections include the following:

1. Division 11 Section "Gymnasium Dividers."
2. Division 26 Sections for electrical service for motor operators, controls, and other powered devices for motorized gymnasium equipment.

1.3 PERFORMANCE REQUIREMENTS

A. Seismic Performance: Provide basketball backboards capable of withstanding the effects of earthquake motions determined according to ASCE 7, "Minimum Design Loads for Buildings and Other Structures": Section 9, "Earthquake Loads."

1.4 ACTION SUBMITTALS

A. Product Data: For each type of product indicated.

1. If applicable, include assembly, disassembly, and storage instructions for removable equipment.
2. Motors: Show nameplate data, ratings, characteristics, and mounting arrangements.
3. Scoreboards: Descriptions of control functions.

B. Shop Drawings: For gymnasium equipment. Include plans, elevations, sections, details, attachments to other work, and the following:

1. Method of field assembly for removable equipment, connections, installation details, mountings, attachments to other work, electrical wiring diagrams, and operational clearances.
2. Transport and storage accessories for removable equipment.

C. Samples: For the following products:

1. Basketball Net: Full size.
2. Pad Fabric: Not less than 3 inches square, with specified treatments applied. Mark face of material.
3. Scoreboard: Finish colors.

1.5 INFORMATIONAL SUBMITTALS

A. Coordination Drawings: Court layout plans, drawn to scale, game lines, and markers applied to finished flooring.

B. Qualification Data: For Installer and professional engineer.

C. Structural analysis data signed and sealed by the qualified professional engineer responsible for their preparation including loads, point reactions, and locations for attachment of gymnasium equipment to structure.

D. Product Certificates: For each type of gymnasium equipment, signed by product manufacturer.

E. Warranty: Special warranty specified in this Section.

F. Manufacturer's installation instructions.

1.6 CLOSEOUT SUBMITTALS

A. Operation and Maintenance Data: For gymnasium equipment to include in emergency, operation, and maintenance manuals.

1.7 QUALITY ASSURANCE

A. Installer Qualifications: An employer of workers trained and approved by manufacturer.

B. Manufacturer Qualifications: Company specializing in manufacturing electronic scoreboards with ten (10) years minimum successful world-wide experience.

C. Source Limitations: Obtain each type of gymnasium equipment through one (1) source from a single manufacturer.

D. Electrical Components, Devices, and Accessories: Listed and labeled as defined in NFPA 70, Article 100, by a testing agency acceptable to authorities having jurisdiction, and marked for intended use.

1.8 PROJECT CONDITIONS

A. Environmental Limitations: Do not install gymnasium equipment until spaces are enclosed and weatherproof, wet work in spaces is complete and dry, and ambient temperature and humidity conditions are maintained at the levels indicated for Project when occupied for its intended use.

B. Field Measurements: Verify position, elevation and layout for gymnasium equipment.

1.9 COORDINATION

A. Coordinate layout and installation of overhead-supported gymnasium equipment and suspension system components with other construction including light fixtures, HVAC equipment, fire-suppression-system components, and partition assemblies.

1.10 WARRANTY

A. Special Warranty: Manufacturer's standard form in which manufacturer agrees to repair or replace components of gymnasium equipment that fail in materials or workmanship within specified warranty period.

1. Failures include, but are not limited to, the following:

a. Basketball backboard failures including glass breakage.
b. Scoreboard failures including controls, receivers and accessories.

2. Warranty Period: Five (5) years from date of Substantial Completion.

PART 2 - PRODUCTS

2.1 MATERIALS

A. Aluminum: Alloy and temper recommended by manufacturer for type of use and finish indicated.

1. Extruded Bars, Profiles, and Tubes: ASTM B 221.
2. Cast Aluminum: ASTM B 179.
3. Flat Sheet: ASTM B 209.

B. Steel: Comply with the following:

1. Steel Plates, Shapes, and Bars: ASTM A 36.
2. Steel Tubing: ASTM A 500 or ASTM A 513, cold formed.
3. Steel Sheet: ASTM A 1011.

C. Support Cable: Manufacturer's standard galvanized steel aircraft cable with a breaking strength of 7000 lb. Provide fittings complying with cable manufacturer's written instructions for size, number, and method of installation.

D. Castings and Hangers: Malleable iron, ASTM A 47, grade required for structural loading.

E. Softwood Plywood: DOC PS 1, exterior.

F. Anchors, Fasteners, Fittings and Hardware: Manufacturer's standard corrosion-resistant or noncorrodible units; concealed; tamperproof, vandal- and theft-resistant design.

2.2 BASKETBALL EQUIPMENT

A. Basis-of-Design Product:

1. ADP Lemco Inc.

B. Available Manufacturers: Subject to compliance with requirements, manufacturers offering products that may be incorporated into the Work include, but are not limited to, the following:

1. Basketball Products International; a division of American Athletic, Inc.
2. Jaypro Sports, LLC.
3. Performance Sports Systems.
4. Substitutions: Under provisions of Division 01 Section “Substitution Procedures”.

C. Protruding fasteners or exposed bolt heads on front face of backboards are not permitted.

D. Overhead-Supported Backboard:

1. Folding Type: Provide manufacturer's standard assembly for backward-folding backboard, with hardware and fittings to permit folding.
2. Framing: Steel pipe, tubing, and shapes. Design framing to minimize vibration during play.

   a. Dual-Mast Frame: Welded with cross bracing.
   b. Finish: Manufacturer's standard powder-coat finish.

3. Goal Height Adjuster: Adjustable from 8 to 10 feet with gear-drive mechanism, locking in any position within adjustment range, with visible height scale attached to side of framing.

   a. Operation: Electric with integral gear-drive motor, with limit switches preset to goal heights, and one (1) detachable electric control device(s).

E. Backboard Safety Device: Designed to limit free fall if support cable, support chain, pulleys, fittings, winch, or related components fail; with mechanical automatic reset; 6000-lb load capacity; one per folding backboard.

F. Backboard Electric Operator: Provide operating machine of size and capacity recommended by manufacturer for equipment specified, with electric motor and factory-prewired motor controls, starter, gear-reduction unit, and remote controls. Coordinate wiring requirements and electrical characteristics with building electrical system.

1. Operator Type: Cable drum with grooved drum and cable tension device to automatically take up cable slack and retain cable in grooves.
2. Operator Mounting: Wall-mounting board.
3. Motor Characteristics: Sufficient to start, accelerate, reverse, and operate connected loads at designated speeds within installed environment and with indicated operating sequence, and without exceeding nameplate rating or considering service factor. Comply with NEMA MG 1, and the following:
4. Voltage: 115 V.
5. Horsepower: 3/4 hp.

6. Enclosure: Totally enclosed.
7. Duty: Continuous duty at ambient temperature of 105 deg F (40 deg C) and at altitude of 3300 feet above sea level.
8. Service Factor: 1.0 for totally enclosed motors.
9. Phase: One.
10. Remote-Control Station(s): NEMA ICS 6, Type 1 enclosure for recessed or flush mounting, momentary-contact, three-position switch-operated control with up, down, and off functions.

    a. Group Key Switch Control Stations: One (1) switch each backboard.
    b. Keys: Provide one (1) key per station.
    c. Switches, Ganged: Single faceplate with multiple switch cut-outs for six (6) switches operating six (6) backboards.
    d. Control Station Enclosure: Provide prime-painted metal enclosure with key access with two (2) sets of keys per enclosure.

11. Limit Switches: Adjustable switches, interlocked with motor controls and set to automatically stop basketball equipment at fully retracted and fully lowered positions.

G. Basketball Backboard:

1. Shape and Size:

    a. Rectangular, 72 by 42 inches width by height.

2. Backboard Material: With predrilled holes or preset inserts for mounting goals, and as follows:

    a. Glass: Not less than ½-inch-thick, transparent tempered glass. Provide glass with impact-absorbing resilient rubber or PVC gasket around perimeter in a fully welded, brushed-natural-finish, extruded-aluminum frame, with steel subframe, reinforcement, and bracing and with mounting slots for mounting backboard frame to backboard support framing.

        1) Standard Mount: Provide steel corner reinforcement with mounting slots for mounting backboard frame to backboard support framing at standard mounting centers.

3. Target Area and Border Markings: Permanently etched in white color, marked in manufacturer's standard pattern and stripe width.

H. Goal Mounting Assembly: Compatible with goal, backboard, and support framing; with hole pattern 5 inches o.c. horizontally and vertically for goal attachment.

1. Glass Backboard Goal Mounting Assembly: Goal support framing and reinforcement designed to transmit load from goal to backboard frame and to minimize stresses on glass backboard.

I. Basketball Goals: Complete with flanges, braces, attachment plate, and evenly spaced loops welded around underside of ring.

1. Single-Rim Basket Ring Competition Goal: Materials, dimensions, and fabrication per manufacturer's standard design.
2. Type: Movable, breakaway design with manufacturer's standard breakaway mechanism and rebound characteristics identical to those of fixed, nonmovable ring.
3. Mount: Front.
4. Net Attachment: No-tie loops for attaching net to rim without tying.
5. Finish: Powder-coat finish.

J. Basketball Nets: 12-loop-mesh net, between 15 and 18 inches long, sized to fit rim diameter, and as follows:

1. Cord: Made from white cotton.

K. Backboard Safety Pads: Designed for backboard thickness indicated and extending continuously along bottom and up sides of backboard and over goal mounting and backboard supports as per manufacturer's standard design.

1. Attachment: Bolt-on.
2. Color: As selected by Architect from manufacturer's full range.

2.3 SAFETY PADS

A. Available Manufacturers: Subject to compliance with requirements, manufacturers offering products that may be incorporated into the Work include, but are not limited to, the following:

1. ADP Lemco Inc.
2. Draper Inc.
3. Jaypro Sports, LLC.
4. Substitutions: Under provisions of Division 01 Section “Substitution Procedures”.

B. Safety Pad Surface-Burning Characteristics: ASTM E 84 by UL or another testing and inspecting agency acceptable to authorities having jurisdiction:

1. Flame-Spread Index: 25 or less.
2. Smoke-Developed Index: 450 or less.

C. Pad Coverings: Provide safety pad fabric covering fabricated from puncture- and tear-resistant, not less than 14-oz./sq. yd PVC-coated polyester or nylon-reinforced PVC fabric treated with fungicide for mildew resistance; with surface-burning characteristics indicated.

D. Wall Safety Pads: Padded wall wainscot panels designed to be attached in a continuous row; each panel section consisting of fill laminated to backer board with visible surfaces fully covered by seamless fabric covering, free of sag and wrinkles and firmly attached to back of backer board.

1. Backer Board: Not less than 3/8-inch- thick plywood, mat formed, or composite panel.
2. Fill: Multiple-impact-resistant foam not less than 1½ inch- thick polyurethane, 3.5-lb/cu. ft. density.
3. Size: Each panel section, 36 inches wide by not less than 96 inches long.
4. Number of Panel Sections: As indicated.

5. Installation Method: Concealed mounting Z-clips.
6. Fabric Covering Color(s): As selected by Architect from manufacturer's full range for two (2) color(s).

E. Column Safety Pads: Pads covering exposed flange of columns to height indicated, consisting of not less than 1¼-inch-thick, multiple-impact-resistant, closed-cell polyethylene-foam filler, covered on both sides and all edges by fabric covering with backer board and manufacturer's standard anchorage to column.

1. Length: Each pad matching length of wall safety pads.
2. Fabric Covering Color(s): Match color of wall safety pads for two (2) color(s).

2.4 ELECTRONIC SCOREBOARDS

A. Basis-of-Design Product:

1. Nevco; **Model 2700**

B. Available Manufacturers: Subject to compliance with requirements, manufacturers offering products that may be incorporated into the Work include, but are not limited to, the following:

1. Electro-Mech Scoreboard Company
2. Jaypro Sports, LLC.
3. Fair-Play Scoreboards
4. Substitutions: Under provisions of Division 01 Section “Substitution Procedures”.

C. Face and Perimeter Frame: Fabricated from 0.050 inch minimum thickness ASTM B 221 aluminum sheet.

1. Finish: Acrylic polyurethane paint in color as selected by Architect and Owner from manufacturer’s full range.

D. Electronics: Low-voltage, solid state, two-wire cable, multiplex system, quartz crystal controlled.

E. LED Units: Seven-bar, segmented digits in protected aluminum cover, rated typical life of one hundred thousand (100,000) hours and designed to provide excellent visibility from all angle and sides.

F. Control cable where required shall be UL listed, two-wire, type RG-58/U, coaxial cable, ¼ inch diameter.

G. Junction boxes where required shall be sheet metal box and cover, 4½ x 2-1/8 x 2-1/8 inches, minimum, complying with NEMA standards.

H. Size: 8 feet long x 3 feet high x 8 inches deep.

I. Power Requirements: 126 Watts max, 100-240 Volts AC.

J. Control Center: Wireless microprocessor based, operator's control center with receiver unit mounted at scoreboard and designed to operate different models of scoreboard by interchange of keyboard overlay; **Model MPCW** as manufactured by Nevco.

1. Console: High impact, break-resistant gray plastic 11 x 9½ x 4-1/8 inches.
2. Features:

   a. Control can be used to operate both wireless and wired scoreboards.
   b. Power on-off switch.
   c. Split and raised forty (40) key keyboards, internal beeper acknowledging each entry, and bookmark capabilities.
   d. Keyboard overlays for scoreboard or accessory.
   e. Remote hand-held main time switch with integral horn button.
   f. Provide with LED displays, lithium cell battery backup to maintain scoreboard memory and time of day, self test mode, power on-off switch, alternate time control, and multiple scoreboard operation.
   g. Timer features: Time of day display, multiple time out timers with warning, interval horn, upcount auto stop with horn, and 1/10th second display during last minute.
   h. Dimmer control for scoreboard.

3. Receiver: Aluminum construction, 6-1/8 x 3 x 1-3/8 inches with 4 inch antenna and mounted at scoreboard.
4. Maximum Range: 1,000 feet from control center to receiver.
5. Receiver shall require no additional source of power or separate control cable
6. Power Adapters: Provide for each control center and receiver.

   a. Input: 120 volts, 0.4 amps, 50/60 Hz.
   b. Output: 9 volts, 1.67 amps, 15 watts.

7. Provide option of battery supply for control operation if utility power not available.
8. Provide carrying case for control center and hand-held switch; **Model CC-3** as manufactured by Nevco.

   a. Size: 18½ x 14½ x 6 inches.
   b. Construction: Double wall, high density black polyethylene with padded interior, mechanical latches, and hinges.

PART 3 - EXECUTION

3.1 EXAMINATION

A. Examine substrates, areas, and conditions, with Installer present, for compliance with requirements for play court layout, alignment of mounting substrates, installation tolerances, operational clearances, accurate locations of connections to building electrical system, and other conditions affecting performance.

1. Verify critical dimensions.
2. Examine supporting structure and subfloors and footings below finished floor.

3. Examine wall assemblies, where reinforced to receive anchors and fasteners, to verify that locations of concealed reinforcements have been clearly marked. Locate reinforcements and mark locations.
4. Proceed with installation only after unsatisfactory conditions have been corrected.

3.2 INSTALLATION, GENERAL

A. General: Comply with manufacturer's written installation instructions. Complete equipment field assembly, where required.

B. Unless otherwise indicated, install gymnasium equipment after other finishing operations, including painting, have been completed.

C. Permanently Placed Gymnasium Equipment and Components: Rigid, level, plumb, square, and true; anchored securely to supporting structure; positioned at locations and elevations indicated on Shop Drawings; in proper relation to adjacent construction; and aligned with court layout.

1. Operating Gymnasium Equipment: Verify clearances for movable components of gymnasium equipment throughout entire range of operation and for access to operating components.

D. Wall and Column Safety Pads: Mount with bottom edge at 4 inches above finished floor.

E. Electronic Scoreboard:

1. Before installation, field test scoreboards and accessories for operating functions. Ensure that scoreboards accurately perform all operations. Correct deficiencies.
2. Rigidly mount level and plumb with brackets.

F. Anchoring to In-Place Construction: Use anchors and fasteners where necessary for securing built-in and permanently placed gymnasium equipment to structural support and for properly transferring load to in-place construction.

G. Connections: Connect automatic operators to building electrical system.

H. Removable Gymnasium Equipment and Components: Assemble in place to verify that equipment and components are complete and in proper working order. Instruct Owner's designated personnel in properly handling, assembling, adjusting, disassembling, transporting, storing, and maintaining units. Disassemble removable gymnasium equipment after assembled configuration has been approved by Architect, and store units in location indicated on Drawings.

3.3 ADJUSTING

A. Adjust movable components of gymnasium equipment to operate safely, smoothly, easily, and quietly, free from binding, warp, distortion, nonalignment, misplacement, disruption, or malfunction, throughout entire operational range. Lubricate hardware and moving parts.

3.4 CLEANING

A. After completing gymnasium equipment installation, inspect components. Remove spots, dirt, and debris and touch up damaged shop-applied finishes according to manufacturer's written instructions.

B. Replace gymnasium equipment and finishes that cannot be cleaned and repaired, in a manner approved by Architect, before time of Substantial Completion.

3.5 DEMONSTRATION

A. Engage a factory-authorized service representative to train Owner's maintenance personnel to adjust, operate, and maintain gymnasium equipment. Refer to Division 01 Section "Demonstration and Training."

END OF SECTION 116623

SECTION 11 68 33 - ATHLETIC FIELD EQUIPMENT

PART 1 GENERAL

1.1 SUMMARY

A. Section includes equipment for:

1. Soccer Fields
2. Baseball/Softball Fields.
3. Basketball Court (2 Portable Hoop Systems).

B. Contractor shall coordinate work between all Subcontractors, sections, and trades required for the proper completion of the work.

1.2 REFERENCES

A. Reference herein to any technical society, organization, group or regulation are made in accordance with the following abbreviations and, unless otherwise noted or specified, all work under this Section shall conform to the latest edition as applicable.

B. Code of Federal Regulations (CFR).

1. 29 CFR 1926, Safety and Health Regulations for Construction.

C. American Society for Testing and Materials (ASTM).

1. ASTM A123- Zinc (Hot Dip Galvanized) Coatings on Iron and Steel Products.
2. ASTM C94- Standard Specification for Ready-Mixed Concrete.

1.3 SUBMITTALS

A. Shop drawings for all equipment furnished under this Section. Shop drawings shall indicate the configuration, dimensions, layout, and spacing of major and minor equipment components such as posts, supports, rails, brackets, fasteners, foundations, anchorage, and a schedule of such equipment components. Show in large-scale details any unique fabrication, assembly, and/or installation requirements.

B. Material certificates or other data indicating compliance with these Specifications for finish type, color, size, style, posts, fittings, hardware, and accessories.

C. Copies of manufacturer-provided installation instructions, operation instructions, and maintenance material for all equipment furnished under this Section.

D. Manufacturer’s warranties and associated warranty registration data in Owner’s name. Submit two (2) copies of each warranty to Engineer in the manufacture’s/supplier's standard form or if there is no standard form available, in a form specified by Engineer.

1.4 QUALITY ASSURANCE

A. Use adequate numbers of skilled workmen who are thoroughly trained and experienced in the necessary crafts and who are completely familiar with the specified requirements and the methods needed for proper performance of the work of this Section.

1.5 DELIVERY, STORAGE AND HANDLING

A. Deliver materials in packed cartons or other protective packaging.

B. Deliver, move, store, or otherwise handle equipment to avoid damage.

C. Damaged equipment shall not be installed. Contractor shall bear responsibility for damage to equipment until final acceptance by Owner. Any installed equipment exhibiting damage shall be replaced or repaired to the satisfaction of Engineer, and Contractor shall assume all costs related thereto.

1.6 WARRANTY

A. Provide manufacturer's standard warranty, as applicable, for all products furnished under this Section. Warranty shall be registered in Owner's name.

B. Bind warranties in heavy-duty, commercial-quality, durable 3-ring, vinyl-covered loose-leaf binders, thickness as necessary to accommodate contents, and sized to receive 8-1/2-by-11-inch paper.

C. Provide heavy paper dividers with celluloid covered tabs for each separate warranty. Mark the tab to identify the product or installation. Provide a typed description of the product or installation, including the name of the product, and the name, address, and telephone number of the Installer.

D. Identify each binder on the front and spine with the typed or printed title "WARRANTIES," Project title or name, and name of Contractor.

E. When warranted construction requires operation and maintenance manuals, provide additional copies of each required warranty, as necessary, for inclusion in each required manual.

PART 2 PRODUCTS

2.1 BASEBALL/SOFTBALL BASES

A. First Base, Second Base, and Third Base - 15 inches square, white, breakaway-type, adult style, three-component system with anchor, base plate and base top conforming to Amateur Softball Association of America, as supplied by Rogers Sport Group, Lee's Summit, MO 64063 (Phone 1-800-8297311; Web www.rogersbreakawaybase.com) or approved equal.

B. Home Plate - White natural rubber, beveled edges on all sides, 17 inch face, 8 1/2-inch parallel sides, 12-inch angled sides to point, equipped with steel backer plate and anchor sleeve or removable zinc-plated steel spikes.

1. Pitching Rubber – White, natural rubber, step-down style, as supplied by Jaypro Sports LLC, 976 Hartford Turnpike, Waterford, CT (Phone 860-447-3001; Web jayprosportsequipment.com) or approved equal.

2.2 BACKSTOPS AND FENCING

A. Refer to Section 32 3113 – Chain Link Fences and Gates.

2.3 FIELD MARKING PINS

A. All fields - One (1) inch diameter by 18-inches, hot-dip galvanized solid steel rod.

2.4 PORTABLE SOCCER GOALS

A. Frame - Square or tubular aluminum, uprights and crossbar counterweighted with 2-inch diameter steel backstays and rear. Provide radius corners and full ground bar for stability and safety. Net clips shall be recessed into goal to provide a smooth surface. Provide auger ground stakes.

B. Dimensions per Drawings.

1. Finish: White, powder-coated.

C. Netting - Polypropylene, 4-millimeter (mm) braided, 5 1/2-inch square mesh.

1. Color: White.

2.5 PORTABLE BASKETBALL SYSTEM

A. Shall be a portable system outfitted with a steel-framed acrylic backboard, sufficient base, adjustable lift system, and pole.

B. Backboard: 36-inch by 48-inch (minimum).

C. Goal: 18 inches in diameter, minimum diameter of 5/8-inch, solid steel support braces at least 1/2-inch diameter. Net hooks shall be welded.

D. Padding: Pole and backboard edge padding shall be included. Color: black.

E. Portable system shall be Spalding 72307PR NBA Acrylic 52 Inch Pro Glide Portable Basketball System or Engineer-approved equal.

PART 3 EXECUTION

3.1 GENERAL

A. Install all equipment at the location indicated on the Drawings in accordance with manufacturer’s instructions and approved shop drawings. Verify proper installation and operation of all equipment.

END OF SECTION

SECTION 122413 - ROLLER WINDOW SHADES

PART 1 - GENERAL

1.1 RELATED DOCUMENTS

A. Drawings and general provisions of the Contract, including General and Supplementary Conditions and Division 01 Specification Sections, apply to this Section.

1.2 SUMMARY

A. Section Includes:

1. Manually operated roller shades with single rollers.
2. Motor-operated roller shades with single rollers.

B. Related Requirements:

1. Division 01 Section "Alternates".
2. Division 06 Section "Rough Carpentry" for wood blocking and grounds for mounting roller shades and accessories.
3. Division 26 Sections for electrical service and connections for motors, controls, limit switches, and other powered devices and for system disconnect switches for motor-operated shades.

1.3 ACTION SUBMITTALS

A. Product Data: For each type of product.

1. Include styles, material descriptions, construction details, dimensions of individual components and profiles, features, finishes, and operating instructions for roller shades.

B. Shop Drawings: Show fabrication and installation details for roller shades, including shadeband materials, their orientation to rollers, and their seam and batten locations.

1. Motor-Operated Shades: Include details of installation and diagrams for power, signal, and control wiring.

C. Samples: For each type of roller shade.

1. Shadeband Material: Not less than3 inches square. Mark inside face of material if applicable.
2. Roller Shade: Full-size operating unit, not less than 16 inches wide by 36 inches long for each type of roller shade indicated.
3. Installation Accessories: Full-size unit, not less than 10 inches long.

D. Roller-Shade Schedule: Use same designations indicated on Drawings.

1.4 INFORMATIONAL SUBMITTALS

A. Qualification Data: For Installer.

B. Product Certificates: For each type of shadeband material, signed by product manufacturer.

C. Product Test Reports: For each type of shadeband material, for tests performed by a qualified testing agency.

1.5 CLOSEOUT SUBMITTALS

A. Maintenance Data: For roller shades to include in maintenance manuals.

1.6 MAINTENANCE MATERIAL SUBMITTALS

A. Furnish extra materials that match products installed and that are packaged with protective covering for storage and identified with labels describing contents.

1. Roller Shades: Full-size units equal to five percent (5%) of quantity installed for each size, color, and shadeband material indicated, but no fewer than two (2) units.

1.7 QUALITY ASSURANCE

A. Installer Qualifications: Fabricator of products.

1.8 DELIVERY, STORAGE, AND HANDLING

A. Deliver roller shades in factory packages, marked with manufacturer, product name, and location of installation using same designations indicated on Drawings.

1.9 FIELD CONDITIONS

A. Environmental Limitations: Do not install roller shades until construction and finish work in spaces, including painting, is complete and dry and ambient temperature and humidity conditions are maintained at the levels indicated for Project when occupied for its intended use.

B. Field Measurements: Where roller shades are indicated to fit to other construction, verify dimensions of other construction by field measurements before fabrication and indicate measurements on Shop Drawings. Allow clearances for operating hardware of operable glazed units through entire operating range. Notify Architect of installation conditions that vary from Drawings. Coordinate fabrication schedule with construction progress to avoid delaying the Work.

PART 2 - PRODUCTS

2.1 MANUFACTURERS

A. Basis-of-Design Product:

1. MechoShade Systems, Inc.

B. Manufacturers: Subject to compliance with requirements, available manufacturers offering products that may be incorporated into the Work include, but are not limited to, the following:

1. Lutron Electronics Co., Inc.
2. Nysan Solar Control Inc.; Hunter Douglas Company.
3. OEM Shades Inc.
4. Substitutions: Under provisions of Division 01 Section “Substitution Procedures”.

C. Source Limitations: Obtain roller shades from single source from single manufacturer.

2.2 MANUALLY OPERATED SHADES WITH SINGLE ROLLERS

A. Chain-and-Clutch Operating Mechanisms: With continuous-loop bead chain and clutch that stops shade movement when bead chain is released; permanently adjusted and lubricated.

1. Bead Chains: Manufacturer's standard.

a. Loop Length: Full length of roller shade.
b. Limit Stops: Provide upper and lower ball stops.
c. Chain-Retainer Type: Chain tensioner, sill mounted.

2. Spring Lift-Assist Mechanisms: Manufacturer's standard for balancing roller-shade weight and lifting heavy roller shades.

a. Provide for shadebands that weigh more than 10 lb or for shades as recommended by manufacturer, whichever criteria are more stringent.

B. Rollers: Corrosion-resistant steel or extruded-aluminum tubes of diameters and wall thicknesses required to accommodate operating mechanisms and weights and widths of shadebands indicated without deflection. Provide with permanently lubricated drive-end assemblies and idle-end assemblies designed to facilitate removal of shadebands for service.

1. Roller Drive-End Location: Right side of inside face of shade.
2. Direction of Shadeband Roll: Regular, from back of roller.
3. Shadeband-to-Roller Attachment: Manufacturer's standard method.

C. Mounting Hardware: Brackets or endcaps, corrosion resistant and compatible with roller assembly, operating mechanism, installation accessories, and mounting location and conditions indicated.

D. Roller-Coupling Assemblies: Coordinated with operating mechanism and designed to join up to three (3) inline rollers into a multiband shade that is operated by one (1) roller drive-end assembly.

E. Shadebands:

1. Shadeband Material: Light-blocking fabric.
2. Shadeband Bottom (Hem) Bar: Steel or extruded aluminum.

a. Type: Enclosed in sealed pocket of shadeband material.
b. Color and Finish: As selected by Architect and Owner from manufacturer's full range.

F. Installation Accessories:

1. Exposed Headbox: Rectangular, extruded-aluminum enclosure including front fascia, top and back covers, endcaps, and removable bottom closure.

a. Height: Manufacturer's standard height required to enclose roller and shadeband when shade is fully open, but not less than 4 inches.

2. Side Channels: With light seals and designed to eliminate light gaps at sides of shades as shades are drawn down. Provide side channels with shadeband guides or other means of aligning shadebands with channels at tops.
3. Bottom (Sill) Channel or Angle: With light seals and designed to eliminate light gaps at bottoms of shades when shades are closed.
4. Installation Accessories Color and Finish: As selected from manufacturer's full range.

2.3 MOTOR-OPERATED, SINGLE-ROLLER SHADES

A. Motorized Operating System: Provide factory-assembled, shade-operator system of size and capacity and with features, characteristics, and accessories suitable for conditions indicated, complete with electric motor and factory-prewired motor controls, power disconnect switch, enclosures protecting controls and operating parts, and accessories required for reliable operation without malfunction. Include wiring from motor controls to motors. Coordinate operator wiring requirements and electrical characteristics with building electrical system.

1. Electrical Components: Listed and labeled as defined in NFPA 70, by a qualified testing agency, and marked for intended location and application.
2. Electric Motor: Manufacturer's standard tubular, enclosed in roller.

a. Electrical Characteristics: Single phase, 120 V, 60 Hz.

3. Remote Control: Electric controls with NEMA ICS 6, Type 1 enclosure for recessed or flush mounting. Provide the following for remote-control activation of shades:

a. Individual/Group Control Station: Maintained-contact, three-position, rocker-style, wall-switch-operated control station with open, close, and center off functions for individual and group control. Locate control stations in Gym Office A109 and Media Office B131, respectively.

b. Microprocessor Control: Electronic programmable means for setting, changing, and adjusting control features; isolated from voltage spikes and surges.
c. Color: As selected by Architect and Owner from manufacturer's full range.

4. Crank-Operator Override: Crank and gearbox operate shades in event of power outage or motor failure.
5. Limit Switches: Adjustable switches interlocked with motor controls and set to stop shades automatically at fully raised and fully lowered positions.
6. Operating Features:

a. Group switching with integrated switch control; single faceplate for multiple switch cutouts.

B. Rollers: Corrosion-resistant steel or extruded-aluminum tubes of diameters and wall thicknesses required to accommodate operating mechanisms and weights and widths of shadebands indicated without deflection. Provide with permanently lubricated drive-end assemblies and idle-end assemblies designed to facilitate removal of shadebands for service.

1. Roller Drive-End Location: Right side of inside face of shade.
2. Direction of Shadeband Roll: Regular, from back of roller.
3. Shadeband-to-Roller Attachment: Manufacturer's standard method.

C. Mounting Hardware: Brackets or endcaps, corrosion resistant and compatible with roller assembly, operating mechanism, installation accessories, and mounting location and conditions indicated.

D. Roller-Coupling Assemblies: Coordinated with operating mechanism and designed to join up to three inline rollers that are operated by one roller drive-end assembly.

E. Shadebands:

1. Shadeband Material: Light-blocking fabric.
2. Shadeband Bottom (Hem) Bar: Steel or extruded aluminum.

a. Type: Enclosed in sealed pocket of shadeband material.
b. Color and Finish: As selected by Architect and Owner from manufacturer's full range.

F. Installation Accessories:

1. Exposed Headbox: Rectangular, extruded-aluminum enclosure including front fascia, top and back covers, endcaps, and removable bottom closure.

a. Height: Manufacturer's standard in height required to enclose roller and shadeband when shade is fully open, but not less than 4 inches.

2. Side Channels: With light seals and designed to eliminate light gaps at sides of shades as shades are drawn down. Provide side channels with shadeband guides or other means of aligning shadebands with channels at tops.
3. Bottom (Sill) Channel or Angle: With light seals and designed to eliminate light gaps at bottoms of shades when shades are closed.

4. Installation Accessories Color and Finish: As selected from manufacturer's full range.

2.4 SHADEBAND MATERIALS

A. Shadeband Material Flame-Resistance Rating: Comply with NFPA 701. Testing by a qualified testing agency. Identify products with appropriate markings of applicable testing agency.

B. Light-Blocking Fabric: Opaque fabric, stain and fade resistant.

1. Source: Roller-shade manufacturer.
2. Type: Fiberglass with acrylic backing.
3. Thickness: 19.6 mil.
4. Weight: 15.1 oz./sq. yd..
5. Roll Width: 100 inches.
6. Orientation on Shadeband: Up the bolt.
7. Features: Washable.
8. Color: As selected by Architect from manufacturer's full range.

2.5 ROLLER-SHADE FABRICATION

A. Product Safety Standard: Fabricate roller shades to comply with WCMA A 100.1, including requirements for flexible, chain-loop devices; lead content of components; and warning labels.

B. Unit Sizes: Fabricate units in sizes to fill window and other openings as follows, measured at 74 deg F (23 deg C):

1. Outside of Jamb Installation: Width and length as indicated, with terminations between shades of end-to-end installations at centerlines of mullion or other defined vertical separations between openings.

C. Shadeband Fabrication: Fabricate shadebands without battens or seams to extent possible except as follows:

1. Vertical Shades: Where width-to-length ratio of shadeband is equal to or greater than 1:4, provide battens and seams at uniform spacings along shadeband length to ensure shadeband tracking and alignment through its full range of movement without distortion of the material.

PART 3 - EXECUTION

3.1 EXAMINATION

A. Examine substrates, areas, and conditions, with Installer present, for compliance with requirements for installation tolerances, operational clearances, accurate locations of connections to building electrical system, and other conditions affecting performance of the Work.

B. Proceed with installation only after unsatisfactory conditions have been corrected.

3.2 ROLLER-SHADE INSTALLATION

A. Install roller shades level, plumb, and aligned with adjacent units according to manufacturer's written instructions.

1. Opaque Shadebands: Located so shadeband is not closer than 2 inches to interior face of glass. Allow clearances for window operation hardware.

B. Electrical Connections: Connect motor-operated roller shades to building electrical system.

3.3 ADJUSTING

A. Adjust and balance roller shades to operate smoothly, easily, safely, and free from binding or malfunction throughout entire operational range.

3.4 CLEANING AND PROTECTION

A. Clean roller-shade surfaces after installation, according to manufacturer's written instructions.

B. Provide final protection and maintain conditions, in a manner acceptable to manufacturer and Installer, that ensure that roller shades are without damage or deterioration at time of Substantial Completion.

C. Replace damaged roller shades that cannot be repaired, in a manner approved by Architect, before time of Substantial Completion.

3.5 DEMONSTRATION

A. Engage a factory-authorized service representative to train Owner's maintenance personnel to adjust, operate, and maintain motor-operated roller shades.

END OF SECTION 122413

SECTION 123553.15 – PHENOLIC LABORATORY CASEWORK

PART 1 - GENERAL

1.1 RELATED DOCUMENTS

A. Drawings and general provisions of the Contract, including General and Supplementary Conditions and Division 01 Specification Sections, apply to this Section.

1.2 SUMMARY

A. Section Includes:

1. Phenolic resin laboratory casework.
2. Filler and closure panels.
3. Laboratory countertops.
4. Tables.
5. Shelves.
6. Laboratory accessories.
7. Water, laboratory gas, and electrical service fittings.

B. Related Sections:

1. Section 061000 "Rough Carpentry" for wood blocking for anchoring laboratory casework.
2. Section 092216 "Non-Structural Metal Framing" for reinforcements in metal-framed partitions for anchoring laboratory casework.
3. Divisions 22 and 26 Sections for installing service fittings specified in this Section, including connecting service utilities.

1.3 PERFORMANCE REQUIREMENTS

A. System Structural Performance: Laboratory casework and support framing system shall withstand the effects of the following gravity loads and stresses without permanent deformation, excessive deflection, or binding of drawers and doors:

1. Support Framing System: 600 lb/ft.
2. Suspended Base Cabinets (Internal Load): 160 lb/ft.
3. Work Surfaces (Including Tops of Suspended Base Cabinets): 160 lb/ft.
4. Wall Cabinets (Upper Cabinets): 160 lb/ft.
5. Shelves: 40 lb/sq. ft.

1.4 ACTION SUBMITTALS

A. Product Data: For each type of product indicated.

B. Shop Drawings: For laboratory casework. Include plans, elevations, sections, details, and attachments to other work.

1. Indicate locations of hardware and keying of locks.

2. Indicate locations and types of service fittings.
3. Indicate locations of blocking and reinforcements required for installing laboratory casework.
4. Include details of exposed conduits, if required, for service fittings.
5. Indicate locations of and clearances from adjacent walls, doors, windows, other building components, and other laboratory equipment.
6. Include coordinated dimensions for laboratory equipment specified in other Sections.

C. Samples for Verification: For each type of cabinet finish and each type of countertop material indicated, in manufacturer's standard sizes.

1.5 INFORMATIONAL SUBMITTALS

A. Qualification Data: For qualified manufacturer.

B. Product Test Reports for Casework: Based on evaluation of comprehensive tests performed by a qualified testing agency, indicating compliance of laboratory casework with requirements of specified product standard.

C. Product Test Reports for Countertop Surface Material: Based on evaluation of comprehensive tests performed by a qualified testing agency, indicating compliance of laboratory countertop surface materials with requirements specified for chemical and physical resistance.

1.6 MAINTENANCE MATERIAL SUBMITTALS

A. Furnish extra materials that match products installed and that are packaged with protective covering for storage and identified with labels describing contents.

1. Cabinet Mounting Clips and Related Hardware: Quantity equal to five percent (5%) of amount installed, but no fewer than twenty (20) of each type.
2. Modular Countertop Units: Two (2) extra units of each length and material installed.

1.7 QUALITY ASSURANCE

A. Manufacturer Qualifications: A qualified manufacturer that produces casework of types indicated for this Project that has been tested for compliance with SEFA 8. Modern plant with proper tools, dies, fixtures and skilled production staff to produce high quality laboratory casework and shall meet the following minimum requirements:

1. Minimum of ten (10) years experience in the manufacturing of laboratory casework.
2. Ten (10) installations of equal or larger size.
3. Must be financially stable.

B. Installer Qualifications: Certified by the manufacturer.

C. Source Limitations: Obtain laboratory casework from single source from single manufacturer unless otherwise indicated.

1. Obtain countertops and accessories from casework manufacturer and service fittings from appropriate trades.

D. Product Designations: Drawings indicate sizes and configurations of laboratory casework by referencing designated manufacturer's catalog numbers. Other manufacturers' laboratory casework of similar sizes and similar door and drawer configurations and complying with the Specifications may be considered. Refer to Division 01 Section "Product Requirements."

E. Casework Product Standard: Comply with SEFA 8, "Laboratory Furniture - Casework, Shelving and Tables - Recommended Practices."

F. Electrical Components, Devices, and Accessories: Listed and labeled as defined in NFPA 70, by a qualified testing agency, and marked for intended location and application.

1.8 DELIVERY, STORAGE, AND HANDLING

A. Protect finished surfaces during handling and installation with protective covering of polyethylene film or other suitable material.

1.9 PROJECT CONDITIONS

A. Environmental Limitations: Do not deliver or install laboratory casework until building is enclosed, utility roughing-in and wet work are complete and dry, and temporary HVAC system is operating and maintaining temperature and relative humidity at occupancy levels during the remainder of the construction period.

1.10 COORDINATION

A. Coordinate layout and installation of framing and reinforcements for support of laboratory casework.

B. Coordinate installation of laboratory casework with installation of other laboratory equipment.

1.11 WARRANTY

A. Warranty: Provide manufacturer's one (1) year warranty against defects in materials and workmanship.

PART 2 - PRODUCTS

2.1 CABINET AND TABLE MATERIALS

A. General:

1. Phenolic Resin: **Trespa Athlon** or equal based on performance.

a. Color as selected by Architect and Owner from manufacturer’s full range.

2.2 AUXILIARY CABINET MATERIALS

A. Glass for Glazed Doors: Clear laminated tempered glass complying with ASTM C 1172, Kind LT, Condition A, Type I, Class I, Quality-Q3; with two (2) lites not less than 3.0 mm thick and with clear, polyvinyl butyral interlayer.

2.3 COUNTERTOP AND TABLE TOP MATERIALS

A. Epoxy: Factory-molded, modified epoxy-resin formulation with smooth, nonspecular finish.

1. Manufacturers: Subject to compliance with requirements, available manufacturers offering products that may be incorporated into the Work include, but are not limited to, the following:

   a. Durcon Company (The).
   b. Epoxyn Products.
   c. Laboratory Tops, Inc.
   d. Prime industries, Inc.
   e. Substitutions: Under provisions of Division 01 Section “Substitution Procedures”.

2. Physical Properties:

   a. Flexural Strength: Not less than 10,000 psi.
   b. Modulus of Elasticity: Not less than 2,000,000 psi.
   c. Hardness (Rockwell M): Not less than 100.
   d. Water Absorption (Twenty-Four (24) Hours): Not more than 0.02 percent.
   e. Heat Distortion Point: Not less than 260 deg F (127 deg C).

3. Chemical Resistance: Epoxy-resin material has the following ratings when tested with indicated reagents according to NEMA LD 3, Test Procedure 3.4.5:

   a. No Effect: Acetic acid (ninety-eight percent (98%)), acetone, ammonium hydroxide (twenty-eight percent (28%)), benzene, carbon tetrachloride, dimethyl formamide, ethyl acetate, ethyl alcohol, ethyl ether, methyl alcohol, nitric acid (seventy percent (70%)), phenol, sulfuric acid (sixty percent (60%)), and toluene.
   b. Slight Effect: Chromic acid (sixty percent (60%)) and sodium hydroxide (fifty percent (50%)).

4. Color: As selected by Architect and Owner from manufacturer's full range.

B. Stainless-Steel Sheet (Bid Alternate): ASTM A 240, Type 316L.

2.4 CABINETS AND TABLES

A. Basis-of-Design Product:

1. BMT/Nelson Casework

B. Manufacturers: Subject to compliance with requirements, available manufacturers offering products that may be incorporated into the Work include, but are not limited to, the following:

1. Thermo Fisher Scientific
2. Substitutions: Under provisions of Section 012500 “Substitution Procedures”.

C. Design:

1. Flush overlay with square edges.

a. Provide 1/8-inch reveals between door to door, door to drawer, drawer to drawer; 1/16-inch vertical reveal between doors/drawers and cabinet ends.

2. Cabinet end panels must have finished ends. Exposed screws are acceptable for fasteners. Black plastic caps to conceal screws.
3. Cabinets to be rigid, self-supporting design for use in assembly or as a single standalone unit. Suspended units are without sub base.
4. Flush Interiors: Surface mounted bottoms and offsets caused by front face frames, which interfere with ease of cleaning, are not acceptable.
5. Joinery: Rabbetted and screwed joinery.
6. Casework width and depth dimension are to be within plus or minus ½ inch from what is shown on the drawings. No exceptions. Manufacturer's standards are not acceptable unless able to meet these requirements.

D. Construction: Provide laboratory casework of the following minimum construction:

1. Base Units:

a. Cabinet Ends: ½ inch thick phenolic resin with polished front edges. Bore interior faces, as appropriate, for security panels, rails and four (4) rows of shelf support holes:

1) Provide four levelers (Peter Meier Style) with threaded adjustment screws and floor pad on all base cabinets.

b. Horizontal Front Top, Intermediate and Back Rail: 1 inch x 3 inch phenolic resin attach to cabinet ends with screws.
c. Toe Space Rail: 3¾ inch x ½ inch phenolic resin attach to cabinet ends with screws forming a 4 inch high x 2½ inch deep toe space.
d. Bottoms: ½ inch thick phenolic resin panel set flush and joined to cabinet end panels with screws. Front edge to be polished.
e. Backs:

1) Cupboard and Drawer Units: One-piece ¼ inch thick phenolic resin panel, rabbetted into sides, bottom and back rail.
2) Sink Units: Half height, one-piece ¼ inch thick phenolic resin panel, rabbetted into sides and bottom panels.

f. Vertical Dividers in Combination Cabinets: 1 inch thick phenolic resin panel screwed in place, top and bottom with front edge polished.
g. Shelves: ¾ inch thick, phenolic resin panel with polished front edge, adjustable on 32mm centers.

1) Depth:

a) Full depth shelf, 20 inches deep.

h. Drawer Construction:

1) Box: Four (4) sided drawer box with back, front and sides of ½ inch phenolic resin panel with polished top edges. ***Three sided drawer box***

attached to outer drawer front is not acceptable. Sides shall be joined by compression dowels and glued.

2) Bottom: ¼ inch phenolic resin panel, inset into all four sides of drawer box and sealed with hot melt glue process around entire drawer bottom perimeter.

i. Door and Removable Drawer Front Construction: ½ inch thick phenolic resin panel with polished edges.

j. Fillers, Kneespace Panels, Scribes, etc.: ½ inch thick phenolic resin panel.

2. Wall, Upper and Tall Cases:

a. Shall be manufactured with appropriate materials and joinery methods as specified for base units except as noted below.

b. Tops: ¾ inch thick, phenolic resin panel with polished front edge.

c. Bottoms: ***Exposed pocket shoulder screws are not acceptable.***

1) Wall and Upper Case: ¾ inch thick, phenolic resin panel with polished front edge.

2) Tall Case: ½ inch thick, phenolic resin panel with polished front edge. Bottom phenolic resin kick rail 3¾ inch high joined to cabinet sides.

d. Backs: ¼ inch thick phenolic resin panel recessed 7/8 inch and set into top, bottom and ends, sealed with hot melt glue process around entire perimeter.

e. Shelves: ¾ inch thick, phenolic resin panels with polished front edges; adjustable on 32mm centers. Depth of shelf to be within 1 inch of the door.

f. Door Construction: ½ inch thick phenolic resin panel with polished edges.

g. Framed Glass Doors: Solid phenolic resin, ½ inch x 2¾ inch frame, machined out of one (1) solid piece with no seams at corners with VHB 3M double sided tape to allow glass to be replaced without tools.

E. Tables: Construction of same material as cabinets per manufacturer's recommendations. Attached stretchers to legs and cross-stretchers, and attach legs to table aprons. Provide leveling device at bottom of each leg.

1. Leg Shoes: Black vinyl or rubber, open-bottom, slip-on type.

2.5 HARDWARE

A. General: Provide laboratory casework manufacturer's standard, commercial-quality, heavy-duty hardware complying with requirements indicated for each type.

B. Hinges: Stainless steel, 165 degree, self closing complying with BHMA A156.9, Grade 1, with antifriction bearings and rounded tips. Provide two (2) hinges for doors up to 36 inches, three (3) hinges for doors 36-63 inches and four (4) hinges for doors over 63 up to 78¾ inches.

C. Hinged Door and Drawer Pulls: Solid stainless steel back-mounted pulls. Provide two (2) pulls for drawers more than 24 inches wide.

D. Drawer Slides: Side mounted, epoxy-coated steel, self-closing; designed to prevent rebound when drawers are closed; complying with BHMA A156.9, Type B05091.

1. Heavy Duty (Grade 1HD-100 and Grade 1HD-200): Full-extension, self-closing, ball-bearing type.

E. Locks for Cabinets: Cam type, satin chrome with chrome-plated finish; complying with BHMA A156.11, Type E07281.

1. Provide a minimum of two (2) keys per lock and two (2) master keys.
2. Provide on all drawers and doors.
3. Keying: Key locks within each room alike, key each room separately.
4. Master Key System: Key all locks to be operable by master key of existing system.

F. Adjustable Shelf Supports for Cabinets: Powder-coated steel shelf rests complying with BHMA A156.9, Type B04013.

G. Grommets for Cable Passage through Countertops: 2-3/8-inch OD, molded-plastic grommets and matching plastic caps with slot for wire passage; color as selected by Architect and Owner from manufacturer's full range.

1. Product: Subject to compliance with requirements, provide "**TG Series**" by Doug Mockett & Company, Inc.

2.6 COUNTERTOPS, TABLE TOPS AND SHELVES

A. Countertops, General: Provide units with smooth surfaces in uniform plane free of defects. Make exposed edges and corners straight and uniformly beveled. Provide front and end overhang of 1 inch, with continuous drip groove on underside ½ inch from edge.

B. Epoxy Countertops and Table Tops:

1. Countertop and Table Top Fabrication: Fabricate with factory cutouts for sinks, holes for service fittings and accessories, and with butt joints assembled with epoxy adhesive and concealed metal splines.

a. Countertop and Table Top Configuration: Flat, 1 inch thick, with beveled edge and corners, and with drip groove and applied backsplash (at counters).
b. Countertop and Table Top Construction: Uniform throughout full thickness.

C. Stainless-Steel Countertops (Bid Alternate): Made from stainless-steel sheet, not less than 0.062-inch nominal thickness, with No. 4 satin finish.

1. Extend top down 1 inch at edges with a ½-inch return flange under frame. Apply heavy coating of heat-resistant, sound-deadening mastic to undersurface.
2. Form backsplash coved to and integral with top surface.
3. Provide raised (marine) edge around perimeter of countertops containing sinks.
4. Factory punch holes for service fittings.
5. Reinforce underside of countertop with channels, or use thicker metal sheet where necessary to ensure rigidity without deflection.
6. Weld shop-made joints.
7. Where field-made joints are required, provide hairline butt joints mechanically bolted through continuous channels welded to underside at edges of joined ends. Keep field jointing to a minimum.

8. Where stainless-steel sinks or cup sinks occur in stainless-steel countertops, factory weld into one (1) integral unit.
9. After fabricating and welding, grind surfaces smooth, and polish as needed to produce uniform, directionally textured finish with no cross scratches or evidence of welds. Passivate and rinse surfaces; remove embedded foreign matter and leave surfaces clean.

D. Stainless-Steel Shelves (Bid Alternate): Made from stainless-steel sheet, not less than 0.050-inch nominal thickness, with No. 4 satin finish. Weld shop-made joints. Fold down front edge ¾ inch; fold up back edge 3 inches. Provide integral stiffening brackets, formed by folding up ends ¾ inch and welding to upturned back edge. After fabricating, grind welds smooth, and polish as needed to produce uniform, directionally textured finish with no cross scratches or evidence of welds. Passivate and rinse surfaces; remove embedded foreign matter and leave surfaces clean.

2.7 LABORATORY ACCESSORIES

A. Pegboards: Polypropylene, epoxy, or phenolic-composite pegboards with removable polypropylene pegs and stainless-steel drip troughs with drain outlet.

B. Fire Blanket Cabinet: Fiberglass, w/ Container, 168 cm x 198 cm, **Model# 6168201** by Science Kit, Tonawanda, NY (800.828.7777) or approved equal.

C. First Aid Kit: **Crusader 75** First Aid Kit by Conney Safety, Madison, WI (800.356.9100) or approved equal. A metal kit box consisting of dressings, waterproof tape, blood flow compresses, first aid burn cream, elastic bandages, bandages, knuckle and fingertip bandages, plastic strips, sterile pads, stretch patches scissors, thermometers, bandages and ointment, as well as other materials provided with this standard model. Sized to serve up to seventy-five (75) people.

D. Goggle Sanitizer Cabinet: **Model SE1000** by Flinn Scientific, Inc., Batavia, IL (800.452.1261), **Model S47604B** by Fischer Scientific (800.766.7000) or approved equal; UV light cabinet, constructed of 24-gauge steel with a white baked enamel finish. Provide with a heavy-duty 8 foot neoprene cord. Cabinet dimensions are 28½ inches H x 26¼ inches W x 10¼ inches D to hold up to thirty-six (36) goggles.

E. Acid Cabinet: **Model SE8081** by Flinn Scientific, Inc. or approved equal; construction of 1 inch thick, high density, 9-ply exterior grade plywood, two (2) polypropylene-lined fixed shelves, floor constructed with a 2 inch liquid-tight trough and polypropylene padlock assembly with padlock and two (2) keys. All surfaces finished with Super Chem-Tuff paint. Cabinet dimensions are 32¼ inches H x 30 inches W x 18½ inches D.

2.8 WATER AND LABORATORY GAS SERVICE FITTINGS

A. Gas Turrets and Faucets will be provided by the appropriate trade contractor. Casework manufacturer shall refer to the sink fixture in Plumbing Fixture schedule on Drawings for the preparation and installation requirements of the specified fittings.

2.9 ELECTRICAL SERVICE FITTINGS

A. GFCI Receptacles will be provided by Electrical Contractor. Devices will require cutouts and recesses in approximate locations as shown on Electrical Drawings.

PART 3 - EXECUTION

3.1 EXAMINATION

A. Examine areas, with Installer present, for compliance with requirements for installation tolerances, location of reinforcements, and other conditions affecting performance of laboratory casework.

B. Proceed with installation only after unsatisfactory conditions have been corrected.

3.2 INSTALLATION OF CABINETS

A. Comply with installation requirements in SEFA 2.3. Install level, plumb, and true; shim as required, using concealed shims. Where laboratory casework abuts other finished work, apply filler strips and scribe for accurate fit, with fasteners concealed where practical. Do not exceed the following tolerances:

1. Variation of Tops of Base Cabinets from Level: 1/16 inch in 10 feet.
2. Variation of Bottoms of Upper Cabinets from Level: 1/8 inch in 10 feet.
3. Variation of Faces of Cabinets from a True Plane: 1/8 inch in 10 feet.
4. Variation of Adjacent Surfaces from a True Plane (Lippage): 1/32 inch.
5. Variation in Alignment of Adjacent Door and Drawer Edges: 1/16 inch.

B. Base Cabinets: Fasten cabinets to utility-space framing, partition framing, wood blocking, or reinforcements in partitions with fasteners spaced not more than 24 inches o.c. Bolt adjacent cabinets together with joints flush, tight, and uniform.

1. Where base cabinets are installed away from walls, fasten to floor at toe space at not more than 24 inches o.c. and at sides of cabinets with not less than two (2) fasteners per side.

C. Wall Cabinets: Fasten to hanging strips, masonry, partition framing, blocking, or reinforcements in partitions. Fasten each cabinet through back, near top, at not less than 24 inches o.c.

D. Install hardware uniformly and precisely. Set hinges snug and flat in mortises.

E. Adjust laboratory casework and hardware so doors and drawers align and operate smoothly without warp or bind and contact points meet accurately. Lubricate operating hardware as recommended by manufacturer.

3.3 INSTALLATION OF COUNTERTOPS

A. Comply with installation requirements in SEFA 2.3. Abut top and edge surfaces in one (1) true plane with flush hairline joints and with internal supports placed to prevent deflection. Locate joints only where shown on Shop Drawings.

B. Field Jointing: Where possible, make in same manner as shop-made joints using dowels, splines, fasteners, adhesives, and sealants recommended by manufacturer. Prepare edges in shop for field-made joints.

C. Fastening:

1. Secure epoxy countertops to cabinets with epoxy cement, applied at each corner and along perimeter edges at not more than 48 inches o.c.
2. Where necessary to penetrate countertops with fasteners, countersink heads approximately 1/8 inch and plug hole flush with material equal to countertop in chemical resistance, hardness, and appearance.

D. Provide required holes and cutouts for service fittings.

E. Provide scribe moldings for closures at junctures of countertop, curb, and splash with walls as recommended by manufacturer for materials involved. Match materials and finish to adjacent laboratory casework. Use chemical-resistant, permanently elastic sealing compound where recommended by manufacturer.

F. Carefully dress joints smooth, remove surface scratches, and clean entire surface.

3.4 INSTALLATION OF LABORATORY ACCESSORIES

A. Install accessories according to Shop Drawings, installation requirements in SEFA 2.3, and manufacturer's written instructions.

B. Securely fasten adjustable shelving supports to partition framing, wood blocking, or reinforcements in partitions.

C. Install shelf standards plumb and at heights to align shelf brackets for level shelves. Install shelving level and straight, closely fitted to other work where indicated.

D. Securely fasten pegboards to partition framing, wood blocking, or reinforcements in partitions.

3.5 INSTALLATION OF SERVICE FITTINGS

A. Service fittings to be installed by the appropriate trade contractor.

B. Installers shall prepare countertops and casework for all required fittings according to the actual fixture provided in the approved Shop Drawings.

3.6 CLEANING AND PROTECTING

A. Clean finished surfaces, touch up as required, and remove or refinish damaged or soiled areas to match original factory finish, as approved by Architect.

B. Protect countertop surfaces during construction with 6-mil plastic or other suitable water-resistant covering. Tape to underside of countertop at a minimum of 48 inches o.c.

END OF SECTION 123553.15

SECTION 123661 - SIMULATED STONE COUNTERTOPS

PART 1 - GENERAL

1.1 RELATED DOCUMENTS

A. Drawings and general provisions of the Contract, including General and Supplementary Conditions and Division 01 Specification Sections, apply to this Section.

1.2 SUMMARY

A. Section Includes:

1. Solid-surface-material countertops, backsplashes and sills.

1.3 ACTION SUBMITTALS

A. Product Data: For countertop materials.

B. HPBS Submittals:

1. Product Data for Sections 16a-38k-6(d)(8) and 16a-38k-6(d)(9): For products having recycled content, documentation indicating percentages by weight of postconsumer and preconsumer recycled content. Include statement indicating cost for each product having recycled content.

C. Shop Drawings: For countertops. Show materials, finishes, edge and backsplash profiles, and methods of joining.

D. Samples: For the following products:

1. Countertop and sill material, 6 inches square.

1.4 PROJECT CONDITIONS

A. Field Measurements: Verify dimensions of countertops by field measurements before countertop fabrication is complete.

1.5 COORDINATION

A. Coordinate locations of utilities that will penetrate countertops or backsplashes.

PART 2 - PRODUCTS

2.1 SOLID-SURFACE-MATERIAL

A. Countertops: ¾-inch- thick, solid surface material with front edge built up with same material.

B. Backsplashes: ¾-inch-thick, solid surface material, integral.

C. Sills: ¾-inch, solid surface material with radius edge.

D. Fabrication: Fabricate tops and sills in one (1) piece with shop-applied edges and backsplashes for tops. Comply with solid-surface-material manufacturer's written instructions for adhesives, sealers, fabrication, and finishing.

2.2 COUNTERTOP MATERIALS

A. Plywood: Exterior softwood plywood complying with DOC PS 1, Grade C-C Plugged, touch sanded.

B. Adhesives: Adhesives shall not contain urea formaldehyde.

C. Solid Surface Material: Homogeneous solid sheets of filled plastic resin complying with ANSI SS1.

1. Manufacturers and color as indicated in Section 090000 “Schedule of Finishes”.
2. Type: Provide Standard Type unless Special Purpose Type is indicated.

PART 3 - EXECUTION

3.1 INSTALLATION

A. Install countertops and sills level to a tolerance of 1/8 inch in 8 feet.

B. Fasten countertops by screwing through supports into underside of countertop. Pre-drill holes for screws as recommended by manufacturer. Align adjacent surfaces and, using adhesive in color to match countertop, form seams to comply with manufacturer's written instructions. Carefully dress joints smooth, remove surface scratches, and clean entire surface.

C. Caulk space between backsplash or sill and wall with sealant specified in Section 079200 "Joint Sealants."

END OF SECTION 123661

SECTION 124813 - ENTRANCE FLOOR MATS AND FRAMES

PART 1 - GENERAL

1.1 RELATED DOCUMENTS

A. Drawings and general provisions of the Contract, including General and Supplementary Conditions and Division 01 Specification Sections, apply to this Section.

1.2 SUMMARY

A. Section Includes:

1. Entrance mats.

B. Related Requirements:

1. Section 124816 "Entrance Floor Grilles" for rigid floor grilles and frames.

1.3 COORDINATION

A. Coordinate size and location of recesses in concrete to receive floor mats and frames.

1.4 ACTION SUBMITTALS

A. Product Data: For each type of product.

1. Include construction details, material descriptions, dimensions of individual components and profiles, and finishes for floor mats and frames.

B. HPBS Submittals:

1. Product Data for Section 16a-38k-5(d): For installation adhesive, documentation including printed statement of VOC content.
2. Product Data for Section 16a-38k-6(d)(9): For products having recycled content, documentation indicating percentages by weight of postconsumer and preconsumer recycled content. Include statement indicating cost for each product having recycled content.

C. Shop Drawings:

1. Items penetrating floor mats, including door control devices.
2. Divisions between mat sections.
3. Perimeter floor moldings.
4. Custom Graphics: Scale drawing indicating colors.

D. Samples: For the following products, in manufacturer's standard sizes:

1. Floor Mat: Assembled sections of floor mat.

1.5 CLOSEOUT SUBMITTALS

A. Maintenance Data: For floor mats to include in maintenance manuals.

PART 2 - PRODUCTS

2.1 ENTRANCE FLOOR MATS AND FRAMES, GENERAL

A. Regulatory Requirements: Comply with applicable provisions in [the U.S. Architectural & Transportation Barriers Compliance Board's ADA-ABA Accessibility Guidelines for Buildings and Facilities and ICC A117.1.

B. Physical properties of the entrance matting shall conform to the following minimums:

1. Surface Flammability: ASTM D 2859 – Pass.
2. Smoke Density: ASTM E 662 – Pass.

2.2 ENTRANCE MATS (**EM1**)

A. Basis-of-Design Product:

1. Mats Inc.

B. Manufacturers: Subject to compliance with requirements, available manufacturers offering products that may be incorporated into the Work include, but are not limited to, the following:

1. Pawling Corporation; Architectural Products Division
2. Substitutions: Under provisions of Section 012500 “Substitution Procedures”.

C. Carpet-Type Mats: One hundred percent (100%) solution-dyed polypropylene fiber with rubber backing.

1. Thickness and Color: As indicated in Section 090000 “Schedule of Finishes”.

D. Performance Characteristics: As follows:

1. Electrostatic Propensity: Less than 2.0 kV according to EN 815.

E. Adhesives: Water-resistant, mildew-resistant, nonstaining, pressure-sensitive type to suit products and subfloor conditions indicated, that complies with flammability requirements for installed entrance mat and is recommended by entrance mat manufacturer for releasable installation.

1. Adhesives shall have a VOC content of 50 g/L or less when calculated according to 40 CFR 59, Subpart D (EPA Method 24).

2.3 FABRICATION

A. Floor Mats: Shop fabricate units to greatest extent possible in sizes indicated. Unless otherwise indicated, provide single unit for each mat installation; do not exceed manufacturer's recommended maximum sizes for units that are removed for maintenance and cleaning. Where

joints in mats are necessary, space symmetrically and away from normal traffic lanes. Miter corner joints in framing elements with hairline joints or provide prefabricated corner units without joints.

PART 3 - EXECUTION

3.1 EXAMINATION

A. Examine substrates and floor conditions for compliance with requirements for location, sizes, and other conditions affecting installation of floor mats.

B. Proceed with installation only after unsatisfactory conditions have been corrected.

3.2 INSTALLATION

A. Install surface-type units to comply with manufacturer's written instructions at locations indicated; coordinate with entrance locations and traffic patterns.

B. Installation Method: Glue down; install with full-spread, releasable, pressure-sensitive adhesive.

3.3 PROTECTION

A. Perform the following operations immediately after installing entrance mat:

1. Remove excess adhesive and other surface blemishes using cleaner recommended by entrance mat manufacturer.
2. Remove yarns that protrude from carpet surface.
3. Vacuum carpet using commercial machine with face-beater element.

B. Protect entrance mat against damage from construction operations and placement of equipment and fixtures during the remainder of construction period. Use protection methods indicated or recommended in writing by entrance mat manufacturer.

END OF SECTION 124813

SECTION 124816 - ENTRANCE FLOOR GRILLES

PART 1 - GENERAL

1.1 RELATED DOCUMENTS

A. Drawings and general provisions of the Contract, including General and Supplementary Conditions and Division 01 Specification Sections, apply to this Section.

1.2 SUMMARY

A. Section includes recessed floor grilles and frames.

B. Related Requirements:

1. Section 124813 "Entrance Floor Mats and Frames" for flexible floor mats and frames.

1.3 COORDINATION

A. Coordinate size and location of recesses in concrete to receive floor grilles and frames.

1.4 ACTION SUBMITTALS

A. Product Data: For each type of product.

1. Include construction details, material descriptions, dimensions of individual components and profiles, and finishes for entrance floor grilles and foot grilles.

B. HPBS Submittals:

1. Product Data for Section 16a-38k-6(d)(9): For products having recycled content, documentation indicating percentages by weight of postconsumer and preconsumer recycled content. Include statement indicating cost for each product having recycled content.

C. Shop Drawings:

1. Items penetrating floor grilles and frames, including door control devices.
2. Divisions between grille sections.
3. Perimeter floor moldings.

D. Samples: For the following products, in manufacturer's standard sizes:

1. Floor Grille: Assembled section of floor grille.
2. Frame Members: Sample of each type and color.

1.5 CLOSEOUT SUBMITTALS

A. Maintenance Data: For floor grilles and frames to include in maintenance manuals.

1.6 FIELD CONDITIONS

A. Field Measurements: Indicate measurements on Shop Drawings.

PART 2 - PRODUCTS

2.1 MANUFACTURERS

A. Basis-of-Design Product:

1. Mats Inc.; **Advanced Track**

B. Manufacturers: Subject to compliance with requirements, available manufacturers offering products that may be incorporated into the Work include, but are not limited to, the following:

1. Balco, Inc.
2. Pawling Corporation; Architectural Products Division
3. Substitutions: Under provisions of Section 012500 “Substitution Procedures”.

2.2 ENTRANCE FLOOR GRILLES, GENERAL

A. Regulatory Requirements: Comply with applicable provisions in the U.S. Architectural & Transportation Barriers Compliance Board's ADA-ABA Accessibility Guidelines for Buildings and Facilities and ICC A117.1.

B. Recycled Content: Postconsumer recycled content plus one-half of preconsumer recycled content not less than seventy-four percent (74%).

2.3 FLOOR GRILLES (**EMC1**)

A. General: Provide manufacturer's standard floor-grille assemblies consisting of treads of type and profile indicated, interlocked or joined together by cross members, and with support legs (if any) and other components needed to produce a complete installation.

B. Aluminum Floor Grilles: Provide manufacturer's standard floor grilles with extruded members, top-surfaced tread rails, and as follows:

1. Tread Rails: Extruded-aluminum tread rails.

a. Aluminum Color: Mill finish.

2. Tread Rail Spacing: 1-5/16 inches o.c. with 3/16-inch-wide openings between treads.
3. Top Surface: Fusion-bonded, level-cut-pile one hundred percent (100%) nylon fiber carpet insert; ¼ inch high, 29 oz./sq. yd.

a. Top Surface Color: As indicated in Section 090000 “Schedule of Finishes”.

4. Grille Size: As indicated.

C. Lockdown: Manufacturer's standard.

2.4 FRAMES

A. Provide manufacturer's standard frames of size and style for grille type, for permanent recessed installation in subfloor, complete with installation anchorages and accessories. Unless otherwise indicated, fabricate frame of same material and finish as grilles.

2.5 MATERIALS

A. Aluminum Sheet: ASTM B 209, alloy and temper recommended by aluminum producer and finisher for type of use and finish indicated, and with not less than strength and durability properties of Alloy 5005-H15.

B. Extruded Aluminum: ASTM B 221, Alloy 6061-T6 or Alloy 6063-T5, T6, or T52 as standard with manufacturer. Coat surface of frame in contact with cementitious materials with manufacturer's standard protective coating.

2.6 FABRICATION

A. Shop fabricate floor grilles to greatest extent possible in sizes as indicated. Unless otherwise indicated, provide each grille as a single unit; do not exceed manufacturer's recommended maximum sizes for units that are removed for maintenance and cleaning. Where joints in grilles are necessary, space symmetrically and away from normal traffic lanes.

B. Fabricate frame members in single lengths or, where frame dimensions exceed maximum available lengths, provide minimum number of pieces possible, with hairline joints equally spaced and pieces spliced together by straight connecting pins.

2.7 ALUMINUM FINISHES

A. Mill finish.

PART 3 - EXECUTION

3.1 EXAMINATION

A. Examine substrates and floor conditions for compliance with requirements for location, size, minimum recess depth, and other conditions affecting installation of floor grilles and frames.

B. Proceed with installation only after unsatisfactory conditions have been corrected.

3.2 INSTALLATION

A. Install recessed floor grilles and frames to comply with manufacturer's written instructions at locations indicated and with top of floor grilles and frames in relationship to one another and to adjoining finished flooring as recommended by manufacturer. Set floor-grille tops at height for most effective cleaning action. Coordinate top of floor-grille surfaces with doors that swing across grilles to provide clearance under door.

3.3 PROTECTION

A. After completing frame installations, provide temporary filler of plywood or fiberboard in floor-grille recesses and cover frames with plywood protective flooring. Maintain protection until construction traffic has ended and Project is near Substantial Completion.

END OF SECTION 124816

SECTION 126600 - TELESCOPING STANDS

PART 1 - GENERAL

1.1 RELATED DOCUMENTS

A. Drawings and general provisions of the Contract, including General and Supplementary Conditions and Division 01 Specification Sections, apply to this Section.

1.2 SUMMARY

A. Section Includes:

1. Wall-attached telescoping stands.

1.3 PERFORMANCE REQUIREMENTS

A. Delegated Design: Design telescoping stands, including comprehensive engineering analysis by a qualified professional engineer, using performance requirements and design criteria indicated.

B. Structural Performance: Telescoping stands shall withstand the effects of gravity loads and loads and stresses within limits and under conditions indicated according to ICC 300.

1.4 ACTION SUBMITTALS

A. Product Data: For each type of product indicated. Include construction details, material descriptions, dimensions of individual components and profiles, and finishes for telescoping stands.

B. HPBS Submittals:

1. Certificates for Section 16a-38k-6(d)(13): Chain-of-custody certificates certifying that wood and wood-based materials comply with forest certification requirements. Include evidence that manufacturer is certified for chain of custody by an FSC-accredited certification body. Include statement indicating cost for each certified wood product.

C. Shop Drawings: For telescoping stands in both stacked and extended positions. Include plans, elevations, sections, details and attachments to other work.

1. Wiring Diagrams: For power, signal and control wiring.

D. Samples: For each type of exposed finish required, prepared on Samples of size indicated below:

1. Decking: 6-inch-square Samples of finished material.
2. Metal Components: 6-inch-square Sample of each color and finish indicated.
3. Seating: 6-inch-square Sample of each seating material, color and finish indicated.
4. Signage: Full-size units for row letters, seat numbers, each type of accessibility sign and custom graphics.

E. Delegated-Design Submittal: For telescoping stands indicated to comply with performance requirements and design criteria, including analysis data signed and sealed by the qualified professional engineer responsible for their preparation.

1.5 INFORMATIONAL SUBMITTALS

A. Qualification Data: For qualified Installer.

B. Welding certificates.

1.6 CLOSEOUT SUBMITTALS

A. Operation and Maintenance Data: For telescoping stands to include in operation and maintenance manuals.

1. Precautions for cleaning materials and methods that could be detrimental to telescoping stand finishes and performance.
2. Methods for maintaining upholstery fabric.

1.7 QUALITY ASSURANCE

A. Installer Qualifications: Manufacturer's authorized representative who is trained and approved for installation of units required for this Project.

B. Welding Qualifications: Qualify procedures and personnel according to AWS D1.1, "Structural Welding Code - Steel," and AWS D1.3, "Structural Welding Code - Sheet Steel."

C. Electrical Components, Devices, and Accessories: Listed and labeled as defined in NFPA 70, by a qualified testing agency, and marked for intended location and application.

D. Standard: Provide telescoping stands to comply with ICC 300.

E. Regulatory Requirements: Comply with applicable provisions in the U.S. Architectural & Transportation Barriers Compliance Board's ADA-ABA Accessibility Guidelines and ICC/ANSI A117.1.

F. Preinstallation Conference: Conduct conference at Project site.

1.8 PROJECT CONDITIONS

A. Field Measurements: Verify actual dimensions of openings and construction contiguous with telescoping stands by field measurements before fabrication. Verify locations of walls, columns, and other construction that will interface with operating telescoping stands.

PART 2 - PRODUCTS

2.1 MATERIALS

A. Wood:

1. Certified Wood: Fabricate stands with wood components produced from wood obtained from forests certified by an FSC-accredited certification body to comply with FSC STD-01-001, "FSC Principles and Criteria for Forest Stewardship."
2. Plywood: APA-grade trademarked, DOC PS 1.

B. Steel:

1. Structural-Steel Shapes, Plates, and Bars: ASTM A 36.
2. Galvanized-Steel Sheet: ASTM A 653, G90 coating designation.
3. Uncoated Steel Sheet: ASTM A 1008, Designation CS (cold-rolled commercial steel), or ASTM A 1011, Designation CS (hot-rolled commercial steel).
4. Tubing: ASTM A 500, cold formed; ASTM A 501, hot formed; or ASTM A 513, mechanical.

C. Polyethylene Plastic: ASTM D 1248, Type III, Class B; high-density polyethylene; molded, color-pigmented, textured, impact-resistant, structural formulation.

2.2 TELESCOPING STANDS

A. General: Operable systems of multiple-tiered seating on interconnected folding platforms that close, without being dismantled, into a nested stack for storing. Stand units permit opening and closing of adjacent rows, allow individual and collective rows to be locked open for use, and close with vertical faces of upper skirts on the same vertical plane.

B. Wall-Attached Telescoping Stands: Forward-folding system, in which the bleachers open in the forward direction by initially moving the front row away from the stack to the fully extended position and the rear of bleacher understructure is permanently attached to wall construction.

1. Basis-of-Design Product:

   a. Hussey Seating Company; **Maxam Gym Bleachers**

2. Manufacturers: Subject to compliance with requirements, available manufacturers offering products that may be incorporated into the Work include, but are not limited to, the following:

   a. Interkal LLC
   b. Irwin Telescopic Seating Company
   c. Substitutions: Under provision of Section 012500 “Substitution Procedures”.

3. Row Spacing and Rise: As indicated on Drawings.
4. Operation: Automatic, integral power unit.

   a. Limit Switches: Automatically stop integral power system when telescoping stands reach fully opened or closed positions.
   b. Motion Monitor: Flashing light with self-contained warning horn, rated at 85 dB at 10 feet, mounted under telescoping seating for audio and visual warning during integral power operation.
   c. Transformer: As required to coordinate current characteristics of motor and control station with building electrical system.
   d. Remote Control: Portable pendant control system.

2.3 COMPONENTS

A. Benches: Seats and skirts.

1. Material: Molded polyethylene plastic with contour surfaces.

a. Color: As selected by Architect and Owner from manufacturer's standard.

2. Bench Height: Not less than 16 inches or more than 18 inches.
3. Bench Depth: 10 inches.

B. Wheelchair-Accessible Seating: Locate permanent seating cutouts to provide wheelchair-accessible seating at locations indicated on Drawings.

1. Equip tiers adjacent to wheelchair-accessible seating with front rails as required by referenced safety standard.
2. Equip cutouts with full-width front closure panels that match decking construction and finish and that extend from underside of tiers adjacent to cutouts to 1½ inches from finished floor.

C. Deck: Plywood, 5/8 inch thick. Plywood shall be cut and installed with top, center and bottom ply grain-oriented from front of deck to rear of deck (nose beam to riser beam).

1. Finish: Sealer coat and wear-resistant high gloss clear urethane finish.

D. Risers: Steel sheet with manufacturer's standard, rust-inhibiting coating or hot-dip galvanized finish.

E. Safety Rails: Structural steel, finished with manufacturer's standard powder coat system.

1. Folding mid-aisle handrails located at centerline of each vertical aisle with seating on both sides.
2. End rails (guards) that are telescoping and self-storing.
3. Back rails (guards) along rear of units where required by referenced safety standard.
4. Fixed front rails (guards) along front of units where required by referenced safety standard.
5. Fixed rails around accessible seating cutouts and truncations.
6. Removable, programming-support front rails to allow seating in upper rows while lower rows remain in the stored position.
7. Color: As selected by Architect and Owner from manufacturer's standard.

F. Understructure: Structural steel.

1. Finish: Manufacturer's standard rust-inhibiting finish.
2. Color: Manufacturer's standard.

G. Support Column Wheels: Nonmarring, soft, rubber-face wheel assembly under each support column.

1. Include wheels of size, number and design required to support stands and operate smoothly without damaging the flooring surface, but no fewer than four (4) per column or less than 3½ inches in diameter and 1 inch wide.

H. Fasteners: Vibration proof, in manufacturer's standard size and material.

2.4 ACCESSORIES

A. Steps:

1. Slip-resistant, abrasive tread surfaces at vertical aisles.
2. Intermediate aisle steps, fully enclosed, at each vertical aisle.
3. Transitional top step, fully enclosed, at each vertical aisle where last row of telescoping stands is adjacent to a cross aisle.
4. Removable front steps, fully enclosed, at each vertical aisle, that engage with front row to prevent accidental separation or movement and are equipped with a minimum of four (4) skid-resistant feet.

B. Closure Panels and Void Fillers:

1. Aisle closures at foot level that produce flush vertical face at aisles when system is stored.
2. End panels covering exposed ends of stands in the stored position.
3. Panels at cutouts and truncations for accessible seating.
4. Rear fillers including supports for closing openings between top row and rear wall of adjoining construction.
5. Gap fillers for closing openings between stand units or between stand units and adjoining construction.

C. Signage:

1. Row letters at each row end.
2. Seat numbers at 18 inches o.c. on benches.
3. Accessibility signs at each accessible space and accessible aisle seat.

D. Scorer's Table: Removable unit that attaches to mounting sockets installed in telescoping stand unit.

2.5 FABRICATION

A. Fabricate understructure from structural-steel members in size, spacing, and form required to support design loads specified in referenced safety standard.

B. Weld understructure to comply with applicable AWS standards.

C. Round corners and edges of components and exposed fasteners to reduce snagging and pinching hazards.

D. Form exposed sheet metal with flat, flush surfaces, level and true in line, and without cracking and grain separation.

E. Seating Supports: Fabricate supports to withstand, without damage to components, the forces imposed by use of stands without failure or other conditions that might impair the usefulness of seating units.

1. Cantilever bench seat supports to produce toe space uninterrupted by vertical bracing.

PART 3 - EXECUTION

3.1 EXAMINATION

A. Examine areas where telescoping stands are to be installed, with Installer present, for compliance with requirements for installation tolerances and other conditions affecting performance of the Work.

B. Proceed with installation only after unsatisfactory conditions have been corrected.

3.2 INSTALLATION

A. Install telescoping stands to comply with referenced safety standard and manufacturer's written instructions.

3.3 ADJUSTING AND CLEANING

A. On completion of installation, lubricate, test and adjust each telescoping stand unit so that it operates according to manufacturer's written operating instructions.

B. Clean installed telescoping stands on exposed and semi-exposed surfaces. Touch up shop-applied finishes or replace components as required to restore damaged or soiled areas.

3.4 DEMONSTRATION

A. Engage a factory-authorized service representative to train Owner's maintenance personnel to adjust, operate, and maintain telescoping stands.

END OF SECTION 126600

SECTION 12 93 00 - SITE FURNISHINGS

PART 1 GENERAL

1.1 SUMMARY

A. Section includes:

1. Benches
2. Waste Receptacles
3. Players Bench

B. Contractor shall coordinate work between all Subcontractors, sections, and trades required for the proper completion of the work.

1.2 REFERENCES

A. Reference herein to any technical society, organization, group or regulation are made in accordance with the following abbreviations and, unless otherwise noted or specified, all work under this Section shall conform to the latest edition as applicable.

B. Code of Federal Regulations (CFR).

1. 29 CFR 1926, Safety and Health Regulations for Construction.

C. American Society for Testing and Materials (ASTM).

1. ASTM A90- Standard Test Method for Weight (Mass) of Coating on Iron or Steel Articles with Zinc or Zinc Alloy.
2. ASTM A123- Zinc (Hot Dip Galvanized) Coatings on Iron and Steel Products.
3. ASTM A153- Standard Specification for Zinc Coating (Hot Dip) on Iron and Steel Hardware.
4. ASTM A428- Standard Test Method for Weight (Mass) of Coating on Aluminum-Coated Iron or Steel Articles.
5. ASTM B211- Standard Specification for Aluminum and Aluminum-Alloy Bar, Rod and Wire.
6. ASTM C94- Standard Specification for Ready-Mixed Concrete.
7. ASTM D2967 – Standard Test Method for Corner Coverage of Powder Coating.
8. ASTM D3451 – Standard Guide for Testing Coating Powders and Powder Coatings.
9. ASTM D4217 – Standard Test Method for Gel Time of Thermosetting Coating Powder.

1.3 SUBMITTALS

A. Shop drawings for all equipment furnished under this Section. Shop drawings shall indicate the configuration, dimensions, layout, and spacing of major and minor equipment components such as posts, supports, rails, brackets, fasteners, foundations, anchorage, and a schedule of such equipment components. Show in large-scale details any unique fabrication, assembly, and/or installation requirements.

B. Material certificates or other data indicating compliance with these Specifications for finish type, color, size, style, posts, fittings, hardware, and accessories.

C. Copies of manufacturer-provided installation instructions, operation instructions, and maintenance material for all equipment furnished under this Section.

D. Manufacturer’s warranties and associated warranty registration data in Owner’s name. Submit two (2) copies of each warranty to Engineer in the manufacture’s/supplier's standard form or if there is no standard form available, in a form specified by Engineer.

E. Submit manufacturer’s samples of materials, finishes, and colors.

1.4 QUALITY ASSURANCE

A. Use adequate numbers of skilled workmen who are thoroughly trained and experienced in the necessary crafts and who are completely familiar with the specified requirements and the methods needed for proper performance of the work of this Section.

1.5 DELIVERY, STORAGE AND HANDLING

A. Deliver materials in packed cartons or other protective packaging.

B. Deliver, move, store, or otherwise handle equipment to avoid damage.

C. Damaged equipment shall not be installed. Contractor shall bear responsibility for damage to equipment until final acceptance by Owner. Any installed equipment exhibiting damage shall be replaced or repaired to the satisfaction of Engineer, and Contractor shall assume all costs related thereto.

1.6 WARRANTY

A. Provide manufacturer’s standard warranty, as applicable, for all products furnished under this Section. Warranty shall be registered in Owner’s name.

B. Bind warranties in heavy-duty, commercial-quality, durable 3-ring, vinyl-covered loose-leaf binders, thickness as necessary to accommodate contents, and sized to receive 8-1/2-by-11-inch paper.

C. Provide heavy paper dividers with celluloid covered tabs for each separate warranty. Mark the tab to identify the product or installation. Provide a typed description of the product or installation, including the name of the product, and the name, address, and telephone number of the Installer.

D. Identify each binder on the front and spine with the typed or printed title "WARRANTIES," Project title or name, and name of Contractor.

E. When warranted construction requires operation and maintenance manuals, provide additional copies of each required warranty, as necessary, for inclusion in each required manual.

PART 2 PRODUCTS

2.1 CONCRETE BENCH

A. Steel or fiberglass reinforced precast concrete, Model Socrates, as supplied by Landscape Forms, 431 Lawndale Avenue, Kalamazoo, MI 49048 (Web:www.landscapeforms.com.com) or approved equal.

1. Color: Grey, with UV and fade resistant properties Finish: Polished

2. Dimensions: 144” L x 18” H x 24” D

2.2 METAL BENCH

A. CityView Model No. CV1-1060, surface mounted, as manufactured by SiteScapes, P.O. Box 22326, Lincoln, NE 68542 (Web: www.sitescapesonline.com) or approved equal.

1. Color: Onyx

2.3 PLAYERS BENCH

A. Anodized aluminum, seat plank, PD Permanent Bench without back, as supplied by National Recreation Systems, 5120 Investment Drive, Fort Wayne, IN 46808 (Phone: 219-482-6023; Web: www.bleachers.net) or approved equal.

1. Length: as indicated on the Drawings.

2.4 TRASH RECEPTACLE

A. CityView Model No. CV2-1010 as manufactured by SiteScapes, P.O. Box 22326, Lincoln, NE 68542 (Web: www.sitescapesonline.com) or approved equal.

1. Color: Onyk

2. Size: 32 Gallon

2.5 TABLE WITH SEATS

A. Hapsburg Model HP6-1SQ, surface mounted, as manufactured by Keystone Ridge Designs, Inc., 670 Mercer Road, Butler, PA 16001 (Web: www.keystoneridgedesigns.com) or approved equal.

1. Color: Nantucket Blue

2.6 BICYCLE RACK

A. Powder coated steel with zinc rich prime coat, Model Rib 2.0, surface mounted, Hot dipped galvanized after fabrication, supplied by Function First, Inc. 3935 N. Country Club Rd. #25, Tucson, AZ 85716 (Web: www.bikerack.com) or approved equal.

B. Color: Black

2.7 CONCRETE

A. Ready-Mix, ASTM C94; or pre-packaged concrete mix, ASTM C 387. Minimum 28-day compressive strength of 4,000 psi.

PART 3 EXECUTION

3.1 GENERAL

A. Install all furnishings at the locations indicated on the Drawings in accordance with manufacturer's instructions and approved shop drawings. Verify proper installation and operation of all equipment.

END OF SECTION

SECTION 132700 - VAULTS

PART 1 - GENERAL

1.1 RELATED DOCUMENTS

A. Drawings and general provisions of the Contract, including General and Supplementary Conditions and Division 01 Specification Sections, apply to this Section.

1.2 SUMMARY

A. Section Includes:

1. Burglary-resistance-rated, modular vault assemblies.
2. Fire-resistance-rated, modular vault assemblies.

1.3 PREINSTALLATION MEETINGS

A. Preinstallation Conference: Conduct conference at [**Project site**] <**Insert location**>.

1.4 ACTION SUBMITTALS

A. Product Data: For each type of product.

B. Shop Drawings: For modular vault assemblies.

1. Include plans, elevations, sections, and attachment and assembly details.
2. Include diagrams for power, signal, and control wiring.
3. Indicate locations of electrical receptacles and light fixtures.
4. Indicate locations of fire sprinklers.

C. Samples: For each exposed product and for each color and texture specified, in manufacturer's standard sizes.

D. Samples for Initial Selection: For each unit with factory-applied finishes.

1. Include Samples of accessories involving color and finish selection.

E. Samples for Verification: For each type of exposed finish in manufacturer's standard sizes.

1. Include Samples of accessories to verify color and finish selection.

F. Delegated-Design Submittal: For modular vault assemblies.

1.5 INFORMATIONAL SUBMITTALS

A. Qualification Data: For Installer.

B. Welding certificates.

C. Product Certificates: For each type of vault panel and door.

D. Product Test Reports: For each vault assembly, for tests performed by a qualified testing agency.

E. Field quality-control reports.

1.6 CLOSEOUT SUBMITTALS

A. Operation and Maintenance Data: For modular vault doors to include in emergency, operation, and maintenance manuals.

1. In addition to items specified in Section 017823 "Operation and Maintenance Data," include keying and combination information.

1.7 QUALITY ASSURANCE

A. Installer Qualifications: An authorized representative who is trained and approved by manufacturer.

1. Maintenance Proximity: Not more than [**2**] <**Insert number**> hours' normal travel time from Installer's place of business to Project site.

B. Welding Qualifications: Qualify procedures and personnel according to AWS D1.1/D1.1M, "Structural Welding Code - Steel."

1.8 DELIVERY, STORAGE, AND HANDLING

A. Deliver modular vault doors wrapped and crated to provide protection during transit and Project-site storage. Do not use nonvented plastic.

B. Deliver keys to Owner by registered mail or overnight package service.

1.9 FIELD CONDITIONS

A. Environmental Limitations: Do not deliver components or install modular vault assemblies until spaces are enclosed and weathertight, and temporary HVAC system is operating and maintaining ambient temperature and humidity conditions at levels intended for building occupants during the remainder of the construction period.

PART 2 - PRODUCTS

2.1 PERFORMANCE REQUIREMENTS

A. Delegated Design: Engage a qualified professional engineer, as defined in Section 014000 "Quality Requirements," to design modular vault assemblies.

B. Seismic Performance: Modular vault assemblies shall withstand the effects of earthquake motions determined according to [**ASCE/SEI 7**] <**Insert requirement**>.

1. The term "withstand" means "the vault assembly will remain in place without separation of any parts when subjected to the seismic forces specified[**and the vault assembly will be fully operational after the seismic event**]."

2.2 BURGLARY-RESISTANCE-RATED MODULAR VAULTS

A. Vault Assembly:

1. Manufacturers: Subject to compliance with requirements, [**provide products by the following**] [**provide products by one of the following**] [**available manufacturers offering products that may be incorporated into the Work include, but are not limited to, the following**]:
2. Basis-of-Design Product: Subject to compliance with requirements, provide [**product indicated on Drawings**] <**Insert manufacturer's name; product name or designation**> or comparable product by one of the following:

a. Access Security Products Ltd.
b. American Vault Corporation.
c. Collier Division, SSE, LLC.
d. Custom Vault Corporation.
e. Diebold, Incorporated.
f. Hamilton Safe.
g. Harrison Concrete Products Inc.
h. International Vault, Inc.
i. Lindsay Concrete Products Co., Inc.
j. Security Systems Equipment.
k. Vault Structures, Inc.
l. Worldwide Safe and Vault, Inc.
m. <**Insert manufacturer's name**>.

3. Burglary Classification: ASTM F 1090, [**Type M**] [**Type 1**] [**Type 2**] [**Type 3**].

B. Vault Panels: Interlocking panels with integral penetrations for sprinklers and conduits for power, signal, and communications systems. Tested according to UL 608 and listed and labeled for burglary-resistance rating corresponding to ASTM F 1090 Type classification indicated by a qualified testing agency.

1. Construction: [**Precast, reinforced concrete**] [**Precast, fiber-reinforced, high-strength, high-density, tempered concrete with factory-prime-painted metal pans on the vault**

side] [**Lightweight units with factory-prime-painted metal cladding**] <**Insert description**>.

2. Vault-Ventilating Ports: Tested according to UL 680 and listed and labeled for burglary-resistance rating corresponding to ASTM F 1090 Type classification indicated for vault assembly by a qualified testing agency; locations as indicated on Drawings. Fabricate ports integral with wall panel.

C. Vault Door Assembly: Tested according to UL 608 and listed and labeled for burglary-resistance rating corresponding to ASTM F 1090 Type classification indicated for vault assembly by a qualified testing agency.

1. Door Construction: Jambs and head shaped to interlock with frame and with full-height, stainless-steel locking bar that engages vertical jambs.
2. Clear Opening Size: [**36 inches wide by not less than 78 inches high (914 mm wide by not less than 1981 mm high)**] [**52 inches wide by not less than 78 inches high (1321 mm wide by not less than 1981 mm high)**] [**As indicated on Drawings**] <**Insert dimensions**>.
3. Emergency Vault Ventilator: Complying with UL 680, with same burglary classification as vault door.
4. Hinges: [**Manufacturer's standard**] <**Insert hinge requirements**>.
5. Handle: [**Manufacturer's standard**] [**Stainless-steel, spoked wheel**] [**Stainless-steel hand wheel with rubber-grip perimeter**] <**Insert handle**>.
6. Combination Locks: [**Manufacturer's standard for burglary-resistance rating required for vault assembly**] [**UL 768, Group 1, four-wheel mechanical type capable of no fewer than one million possible combinations**] <**Insert description**>.

   a. Quantity: [**Two**] [**Three**] per door.

7. Timelock: UL 887 listed, three movement, [**144**] [**199**] hour.
8. Day Guard Lock: Secures locking bar in open position to prevent lock in of personnel.
9. Sills: [**Manufacturer's standard**] <**Insert sill**>.
10. Door Stop: [**Tube-and-bumper**] [**Low-profile**] style.
11. Trim: Stainless-steel, chromium-plated steel, or other trim standard with vault door manufacturer.
12. Factory-Installed Features:

    a. Door contact alarm device.
    b. Heat detector.
    c. In-door telephone jack.
    d. Stainless-steel back panel to conceal timelock.
    e. Can be side lifted.

13. Finish: Manufacturer's standard [**stainless-steel clad**] [**factory-applied, baked-on coating**] <**Insert finish**> finish applied to door, frame, and wall flanges.

    a. Color: [**As indicated by manufacturer's designations**] [**Match Architect's sample**] [**As selected by Architect from manufacturer's full range**] <**Insert color**>.

D. Day Gate: Full width of door opening and designed to restrict entry through vault door; with piano-type or self-closing gravity hinges.

1. Construction: [**Manufacturer's standard**] [**Stainless-steel frame with tempered glass**] [**Vertical, stainless-steel bar grille**] [**Vertical, clear-anodized aluminum bar grille**] [**Clear acrylic**] <**Insert construction**>.
2. Lock: Cylinder-type lock, controlled by key on nonsecure side and by knob on secure side.
3. Features:

   a. Deal window.
   b. Automatic closure.

E. Nonshrink Grout: ASTM C 1107, factory-packaged, nonmetallic aggregate grout; noncorrosive; nonstaining; mixed with water to consistency suitable for application and 30-minute working time.

2.3 FIRE-RESISTANCE-RATED MODULAR VAULTS

A. Vault Assembly: Complying with NFPA 232 and listed and labeled as an assembly according to UL 72 by a qualified testing agency

1. Manufacturers: Subject to compliance with requirements, [**provide products by the following**] [**provide products by one of the following**] [**available manufacturers offering products that may be incorporated into the Work include, but are not limited to, the following**]:
2. Basis-of-Design Product: Subject to compliance with requirements, provide [**product indicated on Drawings**] <**Insert manufacturer's name; product name or designation**> or comparable product by one of the following:

   a. Firelock Data Protection Systems.
   b. <**Insert manufacturer's name**>.

3. Fire-Resistance Rating: [**Class 125 - 2 Hour**] [**Class 125 - 3 Hour**] [**Class 125 - 4 Hour**] [**Class 150 - 3 Hour**] [**Class 150 - 4 Hour**] [**Class 350 - 4 Hour**].

B. Vault Panels: As required for fire-resistance-rated vault assembly.

1. Construction: Fabricated from ceramic insulation in expanded metal frame; with galvanized-steel sheet vapor barrier on inside vault wall panel face and ceramic insulation gaskets for between-panel connections; with integral penetrations for sprinklers; conduits for power, signal, and communication systems; and ventilating ports.

C. Vault Door Assemblies: As required for fire-resistance-rated vault assembly.

1. Clear Opening Size: [**32 inches wide by 78 inches high (813 mm wide by 1981 mm high)**] [**40 inches wide by 78 inches high (1016 mm wide by 1981 mm high)**] [**As indicated on Drawings**].
2. Door: Listed and labeled according to UL 155 by a qualified testing agency, fabricated from all-welded, insulated steel sheet construction; with jambs and head shaped to interlock with frame.

a. Hinges: No fewer than three roller-thrust-bearing hinges of design, size, and weight required for smooth operation of door and to allow full, clear door opening; with hinge cover(s).

1) Hinge Cover: [**Manufacturer's standard**] [**Stainless steel**].

b. Door Bolts: Permanently lubricated, not less than 11/16 inches (17 mm) in diameter, and fabricated from nickel-plated steel. On each vertical side of door, provide five door bolts that engage frame when extended. Bolts automatically retract when handle is operated and automatically extend when door closes.

c. Handle: Manufacturer's standard.

d. Combination Lock: UL 768, Group 2, three-wheel, mechanical type, capable of not less than one million possible combinations.

1) Provide key locking dials.

e. Relocking Device: UL 140 separate relocking device that automatically deadlocks door bolts when lock is subjected to mechanical attack.

f. Escape Mechanism: Provide emergency operation of locks from vault side of door.

g. Door Closer: Automatic, with electromagnetic system and sensor that releases door on detection of heat or smoke; with 180-degree, hold-open position.

h. Day Gate: Manufacturer's standard gate; full width of door opening and designed to restrict entry through vault door; with piano-type or self-closing gravity hinges.

1) Lock: Equip gate with cylinder-type lock, controlled by key on nonsecure side and by lever on secure side.

3. Second, Inner Door: Manufacturer's standard with insulating gasket separating it from the outer door.

a. Lock: [**Keyed cylinder lock; automatically locks when door is closed**] <**Insert requirements**>.

b. Escape Mechanism: Provide emergency operation of locks from vault side of door.

c. Closer: Automatic with electromagnetic hold-open device that holds door in open position until power to the device is cut.

4. Painted Finish: Manufacturer's standard factory-applied, baked-on coating applied to door, frame, and wall flanges.

a. Color: [**As indicated by manufacturer's designations**] [**Match Architect's sample**] [**As selected by Architect from manufacturer's full range**] <**Insert color**>.

PART 3 - EXECUTION

3.1 EXAMINATION

A. Examine substrates, areas, and conditions, with Installer present, for compliance with requirements for installation tolerances, vault door clearances, and other conditions affecting performance of the Work.

B. Examine concrete-slab recesses where vault floor panels are to be installed. Recesses shall be level, plumb, and square.

C. Prepare written report, endorsed by Installer, listing conditions detrimental to performance of the Work.

D. Proceed with installation only after unsatisfactory conditions have been corrected.

3.2 PREPARATION

A. Coordinate size and location of modular vault assemblies with adjacent construction, and furnish anchoring devices with templates, diagrams, and instructions for their installation.

B. Provide temporary shoring or bracing of floors while transporting modular vault components to final location as required to prevent surface damage to floors or deflections in excess of design loads.

C. Remove debris from concrete-slab recesses.

3.3 INSTALLATION, GENERAL

A. Install modular vault assemblies according to manufacturer's written instructions, including clearances between exterior of vault panels and other construction.

B. Set panels and doors accurately in position, level, plumb, aligned, and braced securely until permanent anchors are set. After panel erection is complete, remove temporary braces and spreaders, leaving surfaces smooth and undamaged.

3.4 BURGLARY-RESISTANCE-RATED VAULT ASSEMBLIES

A. Install panels, doors and frames, accessories, supplemental structural supports, and installation materials required to provide a complete modular vault assembly with the burglary-resistance rating indicated.

B. Panel Connections:

1. Wall Panel to Wall Panel: [**Bolted**] [**Welded**].
2. Wall Panel to Ceiling Panel: Welded.
3. Wall Panel to Floor Panel: [**Bolted**] [**Welded**].
4. Wall Panel to Concrete Slab: [**Bolted**] [**Welded**].

C. Slab Recess: After vault is installed, grout perimeter of vault recess flush with top of slab with nonshrink grout.

D. Penetrations: Seal with firestopping as specified in Section 078413 "Penetration Firestopping."

3.5 FIRE-RESISTANCE-RATED VAULT ASSEMBLIES

A. Install panels, doors and frames, accessories, supplemental structural supports, and installation materials required to provide a complete modular vault that complies with the listed and labeled fire-resistance-rated assembly indicated.

3.6 FIELD QUALITY CONTROL

A. Manufacturer's Field Service: Engage a factory-authorized service representative to test and inspect components, assemblies, and equipment installations, including connections.

B. Components, assemblies, and equipment installations, including connections, will be considered defective if they not pass tests and inspections.

C. Remove and replace modular components, assemblies, and equipment installations that do not pass inspections or where inspections indicate that units do not comply with specified requirements.

D. Prepare test and inspection reports.

3.7 ADJUSTING AND CLEANING

A. Adjust vault door hardware and operating mechanism to function smoothly, and lubricate as recommended by manufacturer.

B. Remove and replace work that cannot be successfully cleaned and repaired to permanently eliminate evidence of damage, including dented and bent units.

C. Touchup Painting: Immediately after erection, clean abraded areas of shop paint; paint exposed areas with same material as used for shop painting.

1. Comply with [**SSPC-PA 1 for touching up shop-painted surfaces.**][**Section 099123 "Interior Painting."**]

3.8 DEMONSTRATION

A. [**Engage a factory-authorized service representative to train**] [**Train**] Owner's maintenance personnel to adjust, operate, and maintain modular vault doors.

END OF SECTION 132700

SECTION 210500 - COMMON WORK RESULTS FOR FIRE SUPPRESSION

PART 1 - GENERAL

1.1 RELATED DOCUMENTS

A. Drawings and general provisions of the Contract, including General and Supplementary Conditions and Division 01 Specification Sections, apply to this Section.

1.2 SUMMARY

A. This Section includes the following:

1. Piping materials and installation instructions common to most piping systems.
2. Mechanical sleeve seals.
3. Sleeves.
4. Escutcheons.
5. Grout.
6. Fire-suppression equipment and piping demolition.
7. Equipment installation requirements common to equipment sections.
8. Painting and finishing.
9. Concrete bases.
10. Supports and anchorages.

1.3 DEFINITIONS

A. Finished Spaces: Spaces other than mechanical and electrical equipment rooms, furred spaces, pipe chases, unheated spaces immediately below roof, spaces above ceilings, unexcavated spaces, crawlspaces, and tunnels.

B. Exposed, Interior Installations: Exposed to view indoors. Examples include finished occupied spaces and mechanical equipment rooms.

C. Exposed, Exterior Installations: Exposed to view outdoors or subject to outdoor ambient temperatures and weather conditions. Examples include rooftop locations.

D. Concealed, Interior Installations: Concealed from view and protected from physical contact by building occupants. Examples include above ceilings and in chases.

E. Concealed, Exterior Installations: Concealed from view and protected from weather conditions and physical contact by building occupants but subject to outdoor ambient temperatures. Examples include installations within unheated shelters.

F. The following are industry abbreviations for rubber materials:

1. EPDM: Ethylene-propylene-diene terpolymer rubber.
2. NBR: Acrylonitrile-butadiene rubber.

1.4 SUBMITTALS

A. Product Data: For the following:

1. Mechanical sleeve seals.
2. Escutcheons.

B. Welding certificates.

1.5 QUALITY ASSURANCE

A. Steel Support Welding: Qualify processes and operators according to AWS D1.1, "Structural Welding Code--Steel."

B. Steel Pipe Welding: Qualify processes and operators according to ASME Boiler and Pressure Vessel Code: Section IX, "Welding and Brazing Qualifications."

1. Comply with provisions in ASME B31 Series, "Code for Pressure Piping."
2. Certify that each welder has passed AWS qualification tests for welding processes involved and that certification is current.

C. Electrical Characteristics for Fire-Suppression Equipment: Equipment of higher electrical characteristics may be furnished provided such proposed equipment is approved in writing and connecting electrical services, circuit breakers, and conduit sizes are appropriately modified. If minimum energy ratings or efficiencies are specified, equipment shall comply with requirements.

1.6 DELIVERY, STORAGE, AND HANDLING

A. Deliver pipes and tubes with factory-applied end caps. Maintain end caps through shipping, storage, and handling to prevent pipe end damage and to prevent entrance of dirt, debris, and moisture.

1.7 COORDINATION

A. Arrange for pipe spaces, chases, slots, and openings in building structure during progress of construction, to allow for fire-suppression installations.

B. Coordinate installation of required supporting devices and set sleeves in poured-in-place concrete and other structural components as they are constructed.

C. Coordinate requirements for access panels and doors for fire-suppression items requiring access that are concealed behind finished surfaces. Access panels and doors are specified in Section 083113 "Access Doors and Frames."

PART 2 - PRODUCTS

2.1 MANUFACTURERS

A. In other Part 2 articles where subparagraph titles below introduce lists, the following requirements apply for product selection:

1. Manufacturers: Subject to compliance with requirements, provide products by the manufacturers specified.

2.2 PIPE, TUBE, AND FITTINGS

A. Refer to individual Division 21 piping Sections for pipe, tube, and fitting materials and joining methods.

B. Pipe Threads: ASME B1.20.1 for factory-threaded pipe and pipe fittings.

2.3 JOINING MATERIALS

A. Refer to individual Division 21 piping Sections for special joining materials not listed below.

B. Pipe-Flange Gasket Materials: Suitable for chemical and thermal conditions of piping system contents.

1. ASME B16.21, nonmetallic, flat, asbestos-free, 1/8-inch maximum thickness unless thickness or specific material is indicated.

a. Full-Face Type: For flat-face, Class 125, cast-iron and cast-bronze flanges.
b. Narrow-Face Type: For raised-face, Class 250, cast-iron and steel flanges.

2. AWWA C110, rubber, flat face, 1/8 inch thick, unless otherwise indicated; and full-face or ring type, unless otherwise indicated.

C. Flange Bolts and Nuts: ASME B18.2.1, carbon steel, unless otherwise indicated.

D. Solder Filler Metals: ASTM B 32, lead-free alloys. Include water-flushable flux according to ASTM B 813.

E. Brazing Filler Metals: AWS A5.8, BCuP Series, copper-phosphorus alloys for general-duty brazing, unless otherwise indicated; and AWS A5.8, BAg1, silver alloy for refrigerant piping, unless otherwise indicated.

F. Welding Filler Metals: Comply with AWS D10.12 for welding materials appropriate for wall thickness and chemical analysis of steel pipe being welded.

2.4 MECHANICAL SLEEVE SEALS

A. Description: Modular sealing element unit, designed for field assembly, to fill annular space between pipe and sleeve.

1. Manufacturers:

a. Advance Products & Systems, Inc.
b. Calpico, Inc.
c. Metraflex Co.
d. Pipeline Seal and Insulator, Inc.

2. Sealing Elements: EPDM interlocking links shaped to fit surface of pipe. Include type and number required for pipe material and size of pipe.

3. Pressure Plates: Stainless steel. Include two for each sealing element.
4. Connecting Bolts and Nuts: Stainless steel of length required to secure pressure plates to sealing elements. Include one (1) for each sealing element.

2.5 SLEEVES

A. Galvanized-Steel Sheet: 0.0239-inch minimum thickness; round tube closed with welded longitudinal joint.

B. Steel Pipe: ASTM A 53, Type E, Grade B, Schedule 40, galvanized, plain ends.

C. Cast Iron: Cast or fabricated "wall pipe" equivalent to ductile-iron pressure pipe, with plain ends and integral waterstop, unless otherwise indicated.

D. Stack Sleeve Fittings: Manufactured, cast-iron sleeve with integral clamping flange. Include clamping ring and bolts and nuts for membrane flashing.

1. Underdeck Clamp: Clamping ring with set screws.

E. Molded PVC: Permanent, with nailing flange for attaching to wooden forms.

F. PVC Pipe: ASTM D 1785, Schedule 40.

G. Molded PE: Reusable, PE, tapered-cup shaped, and smooth-outer surface with nailing flange for attaching to wooden forms.

2.6 ESCUTCHEONS

A. Description: Manufactured wall and ceiling escutcheons and floor plates, with an ID to closely fit around pipe, tube, and insulation of insulated piping and an OD that completely covers opening.

B. One-Piece, Deep-Pattern Type: Deep-drawn, box-shaped brass with polished chrome-plated finish.

C. One-Piece, Cast-Brass Type: With set screw.

1. Finish: Polished chrome-plated and rough brass.

D. Split-Casting, Cast-Brass Type: With concealed hinge and set screw.

1. Finish: Polished chrome-plated and rough brass.

E. One-Piece, Stamped-Steel Type: With set screw or spring clips and chrome-plated finish.

F. Split-Plate, Stamped-Steel Type: With concealed hinge, set screw or spring clips, and chrome-plated finish.

G. One-Piece, Floor-Plate Type: Cast-iron floor plate.

H. Split-Casting, Floor-Plate Type: Cast brass with concealed hinge and set screw.

2.7 GROUT

A. Description: ASTM C 1107, Grade B, nonshrink and nonmetallic, dry hydraulic-cement grout.

1. Characteristics: Post-hardening, volume-adjusting, nonstaining, noncorrosive, nongaseous, and recommended for interior and exterior applications.
2. Design Mix: 5000-psi, twenty-eight (28) day compressive strength.
3. Packaging: Premixed and factory packaged.

PART 3 - EXECUTION

3.1 PIPING SYSTEMS - COMMON REQUIREMENTS

A. Install piping according to the following requirements and Division 21 Sections specifying piping systems.

B. Drawing plans, schematics, and diagrams indicate general location and arrangement of piping systems. Indicated locations and arrangements were used to size pipe and calculate friction loss, expansion, pump sizing, and other design considerations. Install piping as indicated unless deviations to layout are approved on Coordination Drawings.

C. Install piping in concealed locations, unless otherwise indicated and except in equipment rooms and service areas.

D. Install piping indicated to be exposed and piping in equipment rooms and service areas at right angles or parallel to building walls. Diagonal runs are prohibited unless specifically indicated otherwise.

E. Install piping above accessible ceilings to allow sufficient space for ceiling panel removal.

F. Install piping to permit valve servicing.

G. Install piping at indicated slopes, or where not specifically indicated, pitched in accordance with NFPA 13 requirements.

H. Install piping free of sags and bends.

I. Install fittings for changes in direction and branch connections.

J. Install piping to allow application of insulation.

K. Select system components with pressure rating equal to or greater than system operating pressure.

L. Install escutcheons for penetrations of walls, ceilings, and floors according to the following:

1. New Piping:

a. Piping with Fitting or Sleeve Protruding from Wall: One-piece, deep-pattern type.
b. Chrome-Plated Piping: One-piece, cast-brass type with polished chrome-plated finish.

c. Insulated Piping: One-piece, stamped-steel type with spring clips.
d. Bare Piping at Wall and Floor Penetrations in Finished Spaces: One-piece, cast-brass type with polished chrome-plated finish.
e. Bare Piping at Ceiling Penetrations in Finished Spaces: One-piece or split-casting, cast-brass type with polished chrome-plated finish.
f. Bare Piping in Unfinished Service Spaces: One-piece, cast-brass type with rough-brass finish.
g. Bare Piping in Equipment Rooms: One-piece, cast-brass type.
h. Bare Piping at Floor Penetrations in Equipment Rooms: One-piece, floor-plate type.

M. Sleeves are not required for core-drilled holes.

N. Permanent sleeves are not required for holes formed by removable PE sleeves.

O. Install sleeves for pipes passing through concrete and masonry walls and concrete floor and roof slabs.

P. Install sleeves for pipes passing through concrete and masonry walls, gypsum-board partitions, and concrete floor and roof slabs.

1. Cut sleeves to length for mounting flush with both surfaces.

a. Exception: Extend sleeves installed in floors of mechanical equipment areas or other wet areas 2 inches above finished floor level. Extend cast-iron sleeve fittings below floor slab as required to secure clamping ring if ring is specified.

2. Install sleeves in new walls and slabs as new walls and slabs are constructed.
3. Install sleeves that are large enough to provide ¼-inch annular clear space between sleeve and pipe or pipe insulation. Use the following sleeve materials:

a. Steel Pipe Sleeves: For pipes smaller than NPS 6 (DN 150).
b. Steel Sheet Sleeves: For pipes NPS 6 (DN 150) and larger, penetrating gypsum-board partitions.
c. Stack Sleeve Fittings: For pipes penetrating floors with membrane waterproofing. Secure flashing between clamping flanges. Install section of cast-iron soil pipe to extend sleeve to 2 inches above finished floor level. Refer to Section 076200 "Sheet Metal Flashing and Trim" for flashing.

1) Seal space outside of sleeve fittings with grout.

4. Except for underground wall penetrations, seal annular space between sleeve and pipe or pipe insulation, using joint sealants appropriate for size, depth, and location of joint. Refer to Section 079200 "Joint Sealants" for materials and installation.

Q. Aboveground, Exterior-Wall Pipe Penetrations: Seal penetrations using sleeves and mechanical sleeve seals. Select sleeve size to allow for 1-inch annular clear space between pipe and sleeve for installing mechanical sleeve seals.

1. Install steel pipe for sleeves smaller than 6 inches in diameter.
2. Install cast-iron "wall pipes" for sleeves 6 inches and larger in diameter.

3. Mechanical Sleeve Seal Installation: Select type and number of sealing elements required for pipe material and size. Position pipe in center of sleeve. Assemble mechanical sleeve seals and install in annular space between pipe and sleeve. Tighten bolts against pressure plates that cause sealing elements to expand and make watertight seal.

R. Underground, Exterior-Wall Pipe Penetrations: Install cast-iron "wall pipes" for sleeves. Seal pipe penetrations using mechanical sleeve seals. Select sleeve size to allow for 1-inch annular clear space between pipe and sleeve for installing mechanical sleeve seals.

1. Mechanical Sleeve Seal Installation: Select type and number of sealing elements required for pipe material and size. Position pipe in center of sleeve. Assemble mechanical sleeve seals and install in annular space between pipe and sleeve. Tighten bolts against pressure plates that cause sealing elements to expand and make watertight seal.

S. Fire-Barrier Penetrations: Maintain indicated fire rating of walls, partitions, ceilings, and floors at pipe penetrations. Seal pipe penetrations with firestop materials. Refer to Section 078413 "Penetration Firestopping" for materials.

T. Verify final equipment locations for roughing-in.

U. Refer to equipment specifications in other Sections of these Specifications for roughing-in requirements.

3.2 PIPING JOINT CONSTRUCTION

A. Join pipe and fittings according to the following requirements and Division 21 Sections specifying piping systems.

B. Ream ends of pipes and tubes and remove burrs. Bevel plain ends of steel pipe.

C. Remove scale, slag, dirt, and debris from inside and outside of pipe and fittings before assembly.

D. Soldered Joints: Apply ASTM B 813, water-flushable flux, unless otherwise indicated, to tube end. Construct joints according to ASTM B 828 or CDA's "Copper Tube Handbook," using lead-free solder alloy complying with ASTM B 32.

E. Brazed Joints: Construct joints according to AWS's "Brazing Handbook," "Pipe and Tube" Chapter, using copper-phosphorus brazing filler metal complying with AWS A5.8.

F. Threaded Joints: Thread pipe with tapered pipe threads according to ASME B1.20.1. Cut threads full and clean using sharp dies. Ream threaded pipe ends to remove burrs and restore full ID. Join pipe fittings and valves as follows:

1. Apply appropriate tape or thread compound to external pipe threads unless dry seal threading is specified.
2. Damaged Threads: Do not use pipe or pipe fittings with threads that are corroded or damaged. Do not use pipe sections that have cracked or open welds.

G. Welded Joints: Construct joints according to AWS D10.12, using qualified processes and welding operators according to Part 1 "Quality Assurance" Article. All welding shall be done in the shop, not at the project site.

H. Flanged Joints: Select appropriate gasket material, size, type, and thickness for service application. Install gasket concentrically positioned. Use suitable lubricants on bolt threads.

3.3 PAINTING

A. Painting of fire-suppression systems, equipment, and components is specified in Sections 099123 "Interior Painting" and 099113 "Exterior Painting."

B. Damage and Touchup: Repair marred and damaged factory-painted finishes with materials and procedures to match original factory finish. Exception: Marred or damaged sprinklers shall not be field-repaired or refinished. All sprinklers marred or damaged prior to system turnover to Owner shall be replaced entirely with new sprinklers.

3.4 CONCRETE BASES

A. Concrete Bases: Anchor equipment to concrete base according to equipment manufacturer's written instructions and according to seismic codes at Project.

1. Construct concrete bases of dimensions indicated, but not less than 4 inches larger in both directions than supported unit.
2. Install dowel rods to connect concrete base to concrete floor. Unless otherwise indicated, install dowel rods on 18-inch centers around the full perimeter of the base.
3. Install epoxy-coated anchor bolts for supported equipment that extend through concrete base, and anchor into structural concrete floor.
4. Place and secure anchorage devices. Use supported equipment manufacturer's setting drawings, templates, diagrams, instructions, and directions furnished with items to be embedded.
5. Install anchor bolts to elevations required for proper attachment to supported equipment.
6. Install anchor bolts according to anchor-bolt manufacturer's written instructions.
7. Use 3000-psi, twenty-eight (28) day compressive-strength concrete and reinforcement as specified in Section 032000 "Concrete Work."

3.5 ERECTION OF METAL SUPPORTS AND ANCHORAGES

A. Refer to Section 055000 "Metal Fabrications" for structural steel.

B. Cut, fit, and place miscellaneous metal supports accurately in location, alignment, and elevation to support and anchor fire-suppression materials and equipment.

C. Field Welding: Comply with AWS D1.1.

3.6 ERECTION OF WOOD SUPPORTS AND ANCHORAGES

A. Cut, fit, and place wood grounds, nailers, blocking, and anchorages to support, and anchor fire-suppression materials and equipment.

B. Select fastener sizes that will not penetrate members if opposite side will be exposed to view or will receive finish materials. Tighten connections between members. Install fasteners without splitting wood members.

C. Attach to substrates as required to support applied loads.

3.7 GROUTING

A. Mix and install grout for fire-suppression equipment base bearing surfaces, pump and other equipment base plates, and anchors.

B. Clean surfaces that will come into contact with grout.

C. Provide forms as required for placement of grout.

D. Avoid air entrapment during placement of grout.

E. Place grout, completely filling equipment bases.

F. Place grout on concrete bases and provide smooth bearing surface for equipment.

G. Place grout around anchors.

H. Cure placed grout.

END OF SECTION 210500

SECTION 210548 - VIBRATION AND SEISMIC CONTROLS FOR FIRE-SUPPRESSION PIPING AND EQUIPMENT

PART 1 - GENERAL

1.1 RELATED DOCUMENTS

A. Drawings and general provisions of the Contract, including General and Supplementary Conditions and Division 01 Specification Sections, apply to this Section.

1.2 SUMMARY

A. This Section includes the following:

1. Isolation pads.
2. Isolation mounts.
3. Restrained elastomeric isolation mounts.
4. Restraining braces.

1.3 DEFINITIONS

A. IBC: International Building Code.

B. ICC-ES: ICC-Evaluation Service.

C. OSHPD: Office of Statewide Health Planning and Development for the State of California.

D. NFPA: National Fire Protection Association

E. CSBC: Connecticut State Building Code

1.4 PERFORMANCE REQUIREMENTS

A. Seismic-Restraint Loading:

1. Provide seismic restraints in accordance with the Connecticut State Building Code

1.5 SUBMITTALS

A. Product Data: For the following:

1. Include rated load, rated deflection, and overload capacity for each vibration isolation device.
2. Illustrate and indicate style, material, strength, fastening provision, and finish for each type and size of seismic-restraint component used.

B. Delegated-Design Submittal: For vibration isolation and seismic-restraint details indicated to comply with performance requirements and design criteria, including analysis data signed and sealed by the qualified professional engineer responsible for their preparation.

1. Design Calculations: Calculate static and dynamic loading due to equipment weight and operation, seismic forces required to select vibration isolators, seismic restraints, and for designing vibration isolation bases.
2. Seismic-Restraint Details:

    a. Design Analysis: To support selection and arrangement of seismic restraints. Include calculations of combined tensile and shear loads.
    b. Details: Indicate fabrication and arrangement. Detail attachments of restraints to the restrained items and to the structure. Show attachment locations, methods, and spacings. Identify components, list their strengths, and indicate directions and values of forces transmitted to the structure during seismic events. Indicate association with vibration isolation devices.

C. Welding certificates.

1.6 QUALITY ASSURANCE

A. Comply with seismic-restraint requirements in the Connecticut State Building Code and NFPA 13 unless requirements in this Section are more stringent.

B. Welding: Qualify procedures and personnel according to AWS D1.1, "Structural Welding Code - Steel."

C. Seismic-restraint devices shall have horizontal and vertical load testing and analysis and shall bear anchorage preapproval OPA number from OSHPD, preapproval by ICC-ES, or preapproval by another agency acceptable to authorities having jurisdiction, showing maximum seismic-restraint ratings. Ratings based on independent testing are preferred to ratings based on calculations. If preapproved ratings are not available, submittals based on independent testing are preferred. Calculations (including combining shear and tensile loads) to support seismic-restraint designs must be signed and sealed by a qualified professional engineer.

PART 2 - PRODUCTS

2.1 SEISMIC-RESTRAINT DEVICES

A. Manufacturers: Subject to compliance with requirements, provide products by one (1) of the following:

1. Cooper B-Line, Inc.; a division of Cooper Industries
2. Hilti, Inc.
3. Mason Industries
4. TOLCO Incorporated; a brand of NIBCO INC.
5. Unistrut; Tyco International, Ltd.

B. Channel Support System: MFMA-3, shop- or field-fabricated support assembly made of slotted steel channels with accessories for attachment to braced component at one end and to building structure at the other end and other matching components and with corrosion-resistant coating; and rated in tension, compression, and torsion forces.

C. Hanger Rod Stiffener: Steel tube or steel slotted-support-system sleeve with internally bolted connections to hanger rod.

D. Bushings for Floor-Mounted Equipment Anchor Bolts: Neoprene bushings designed for rigid equipment mountings, and matched to type and size of anchor bolts and studs.

E. Bushing Assemblies for Wall-Mounted Equipment Anchorage: Assemblies of neoprene elements and steel sleeves designed for rigid equipment mountings and matched to type and size of attachment devices used.

F. Resilient Isolation Washers and Bushings: One-piece, molded, oil- and water-resistant neoprene, with a flat washer face.

G. Mechanical Anchor Bolts: Drilled-in and stud-wedge or female-wedge type in zinc-coated steel for interior applications and stainless steel for exterior applications. Select anchor bolts with strength required for anchor and as tested according to ASTM E 488. Minimum length of eight (8) times diameter.

H. Adhesive Anchor Bolts: Drilled-in and capsule anchor system containing polyvinyl or urethane methacrylate-based resin and accelerator, or injected polymer or hybrid mortar adhesive. Provide anchor bolts and hardware with zinc-coated steel for interior applications and stainless steel for exterior applications. Select anchor bolts with strength required for anchor and as tested according to ASTM E 488.

2.2 FACTORY FINISHES

A. Finish: Manufacturer's standard paint applied to factory-assembled and -tested equipment before shipping.

1. Powder coating on springs and housings.
2. All hardware shall be galvanized. Hot-dip galvanize metal components for exterior use.
3. Baked enamel or powder coat for metal components on isolators for interior use.
4. Color-code or otherwise mark vibration isolation and seismic-control devices to indicate capacity range.

PART 3 - EXECUTION

3.1 EXAMINATION

A. Examine areas and equipment to receive vibration isolation and seismic-control devices for compliance with requirements for installation tolerances and other conditions affecting performance.

B. Examine roughing-in of reinforcement and cast-in-place anchors to verify actual locations before installation.

C. Proceed with installation only after unsatisfactory conditions have been corrected.

3.2 VIBRATION-CONTROL AND SEISMIC-RESTRAINT DEVICE INSTALLATION

A. Piping Restraints:

1. Comply with requirements in MSS SP-127 and NFPA 13 and the Connecticut State Building Code.

3.3 ACCOMMODATION OF DIFFERENTIAL SEISMIC MOTION

A. Install flexible connections in piping where they cross seismic joints, where adjacent sections or branches are supported by different structural elements, and where the connections terminate with connection to equipment that is anchored to a different structural element from the one supporting the connections as they approach equipment. Comply with requirements in Section 21313 "Wet-Pipe Sprinkler Systems" for piping flexible connections.

END OF SECTION 210548

SECTION 210553 - IDENTIFICATION FOR FIRE-SUPPRESSION PIPING AND EQUIPMENT

PART 1 - GENERAL

1.1 RELATED DOCUMENTS

A. Drawings and general provisions of the Contract, including General and Supplementary Conditions and Division 01 Specification Sections, apply to this Section.

1.2 SUMMARY

A. Section Includes:

1. Equipment labels.
2. Warning signs and labels.
3. Pipe labels.
4. Stencils.
5. Valve tags.
6. Warning tags.

1.3 ACTION SUBMITTALS

A. Product Data: For each type of product.

B. Samples: For color, letter style, and graphic representation required for each identification material and device.

C. Equipment-Label Schedule: Include a listing of all equipment to be labeled and the proposed content for each label.

D. Valve Schedules: Valve numbering scheme.

1.4 CLOSEOUT SUBMITTALS

A. Maintenance Data: For each piping system to include in maintenance manuals.

PART 2 - PRODUCTS

2.1 EQUIPMENT LABELS

A. Metal Labels for Equipment:

1. Material and Thickness: Brass, 0.032 inch thick, with predrilled holes for attachment hardware.
2. Letter Color: Red.
3. Background Color: White.
4. Minimum Label Size: Length and width vary for required label content, but not less than 2½ by ¾ inch.

5. Minimum Letter Size: ¼ inch for name of units if viewing distance is less than 24 inches, ½ inch for viewing distances up to 72 inches, and proportionately larger lettering for greater viewing distances. Include secondary lettering two-thirds to three-fourths the size of principal lettering.
6. Fasteners: Stainless-steel rivets or self-tapping screws.
7. Adhesive: Contact-type permanent adhesive, compatible with label and with substrate.

B. Label Content: Include equipment's Drawing designation or unique equipment number, Drawing numbers where equipment is indicated (plans, details, and schedules), and the Specification Section number and title where equipment is specified.

C. Equipment-Label Schedule: For each item of equipment to be labeled, on 8½-by-11-inch bond paper. Tabulate equipment identification number and identify Drawing numbers where equipment is indicated (plans, details, and schedules) and the Specification Section number and title where equipment is specified. Equipment schedule shall be included in operation and maintenance data.

2.2 WARNING SIGNS AND LABELS

A. Material and Thickness: Multilayer, multicolor, plastic labels for mechanical engraving, 1/8 inch thick, with predrilled holes for attachment hardware.

B. Letter Color: Black.

C. Background Color: Yellow.

D. Maximum Temperature: Able to withstand temperatures up to 160 deg F (71 deg C).

E. Minimum Label Size: Length and width vary for required label content, but not less than 2½ by ¾ inch.

F. Minimum Letter Size: ¼ inch for name of units if viewing distance is less than 24 inches, ½ inch for viewing distances up to 72 inches, and proportionately larger lettering for greater viewing distances. Include secondary lettering two-thirds to three-fourths the size of principal lettering.

G. Fasteners: Stainless-steel rivets or self-tapping screws.

H. Adhesive: Contact-type permanent adhesive, compatible with label and with substrate.

I. Label Content: Include caution and warning information, plus emergency notification instructions.

2.3 PIPE LABELS

A. General Requirements for Manufactured Pipe Labels: Preprinted, color-coded, with lettering indicating service and showing flow direction.

B. Pretensioned Pipe Labels: Precoiled, semirigid plastic formed to cover full circumference of pipe and to attach to pipe without fasteners or adhesive.

C. Self-Adhesive Pipe Labels: Printed plastic with contact-type, permanent-adhesive backing.

D. Pipe-Label Contents: Include identification of piping service using same designations or abbreviations as used on Drawings; pipe size; and an arrow indicating flow direction.

1. Flow-Direction Arrows: Integral with piping-system service lettering to accommodate both directions, or as separate unit on each pipe label to indicate flow direction.
2. Lettering Size: At least 1½ inches high.

E. Pipe-Label Colors:

1. Background Color: Red.
2. Letter Color: White.

2.4 VALVE TAGS

A. Valve Tags: Stamped or engraved with ¼-inch letters for piping-system abbreviation and ½-inch numbers.

1. Tag Material: Brass, 0.032 inch thick, with predrilled holes for attachment hardware.
2. Fasteners: Brass wire-link chain, beaded chain or S-hook.
3. Valve-Tag Color: Red.
4. Letter Color: White.

B. Valve Schedules: For each piping system, on 8½-by-11-inch (A4) bond paper. Tabulate valve number, piping system, system abbreviation (as shown on valve tag), location of valve (room or space), normal-operating position (open, closed, or modulating), and variations for identification. Mark valves for emergency shutoff and similar special uses.

1. Valve-tag schedule shall be included in operation and maintenance data.

2.5 WARNING TAGS

A. Warning Tags: Preprinted or partially preprinted, accident-prevention tags, of plasticized card stock with matte finish suitable for writing.

1. Size: Approximately 4 by 7 inches.
2. Fasteners: Brass grommet and wire.
3. Nomenclature: Large-size primary caption such as "DANGER," "CAUTION," or "DO NOT OPERATE."
4. Color: Yellow background with black lettering.

PART 3 - EXECUTION

3.1 PREPARATION

A. Clean piping and equipment surfaces of substances that could impair bond of identification devices, including dirt, oil, grease, release agents, and incompatible primers, paints, and encapsulants.

3.2 LABEL INSTALLATION

A. Coordinate installation of identifying devices with completion of covering and painting of surfaces where devices are to be applied.

B. Coordinate installation of identifying devices with locations of access panels and doors.

C. Install or permanently fasten labels on each major item of mechanical equipment.

D. Locate equipment labels where accessible and visible.

E. Piping Color-Coding: Painting of piping is specified in Section 099123 "Interior Painting."

F. Pipe-Label Locations: Locate pipe labels where piping is exposed or above accessible ceilings in finished spaces; machine rooms; accessible maintenance spaces such as shafts, tunnels, and plenums; and exterior exposed locations as follows:

1. Near each valve and control device.
2. Near each branch connection excluding short takeoffs. Where flow pattern is not obvious, mark each pipe at branch.
3. Near penetrations through walls, floors, ceilings, and inaccessible enclosures.
4. At access doors, manholes, and similar access points that permit view of concealed piping.
5. Near major equipment items and other points of origination and termination.
6. Spaced at maximum intervals of 50 feet along each run. Reduce intervals to 25 feet in areas of congested piping and equipment.
7. On piping above removable acoustical ceilings. Omit intermediately spaced labels.

3.3 VALVE-TAG INSTALLATION

A. Install tags on valves and control devices in piping systems. List tagged valves in a valve-tag schedule.

B. Valve-Tag Application Schedule: Tag valves according to size, shape, and with captions similar to those indicated in "Valve-Tag Size and Shape" Subparagraph below:

1. Valve-Tag Size and Shape:

a. Wet-Pipe Sprinkler System: 2 inches round.

3.4 WARNING-TAG INSTALLATION

A. Write required message on, and attach warning tags to, equipment and other items where required.

END OF SECTION 210553

SECTION 211100 - FACILITY FIRE-SUPPRESSION WATER-SERVICE PIPING

PART 1 - GENERAL

1.1 RELATED DOCUMENTS

A. Drawings and general provisions of the Contract, including General and Supplementary Conditions and Division 01 Specification Sections, apply to this Section.

1.2 SUMMARY

A. General Information: According to drawings and design personnel for previous projects at the school, a 6” ductile iron fire service has already been installed between the general vicinities of the well equipment building and the school building’s basement, in anticipation of a fire pump installation in the well equipment building in the future. In coordination with the Site Contractor, verify the exact routing of the existing fire service and coordinate required connection locations and protection of the fire service under the new addition with verified conditions.

B. Section includes fire-suppression water-service piping and related components outside, 5 feet and less from the school building, and service entrance piping through foundation wall into the basement of the school building.

C. Section includes coordination with the Site and Electrical Contractors in provision of a new underground fire suppression water storage tank/piping/level monitoring installation. Contractor’s work includes the following: Purchase of underground fire suppression water storage tank for installation by the Site Contractor; provision of all interconnecting piping between new underground fire suppression water storage tank and the new packaged fire pump installation in the well equipment building; provision of all piping related to the fire suppression water storage tank (including fill, vent and overflow; free-standing fire pump test header and piping; also, related drains and drain piping to 10 feet away from tank footprint. Provision of tank level monitoring/alarm system and coordination with Electrical Contractor for provision of required monitoring/alarm system conduit and wiring. All other exterior fire suppression service piping shall be provided by the Site Contractor. Refer to Site Drawings and Site Utilities Specifications.

D. Comply with all requirements specified herein and in NFPA 24 “Standard for the Installation of Private Fire Service Mains and Their Appurtenances” (CT in-force edition) for fire suppression water service piping.

E. Comply with all requirements specified herein, and in NFPA 22 “Standard for Water Tanks for Private Fire Protection” (CT in-force edition) for fire suppression water storage tank installation.

F. Related Sections:

1. Section 211313 "Wet-Pipe Sprinkler Systems" for wet-pipe fire-suppression sprinkler systems inside the building.

1.3 SUBMITTALS

A. Product Data: For each type of product indicated.

B. The tank manufacturer shall supply project-specific scaled drawings, product brochures and manufacturers Installation Manual and Operating Guidelines.

C. Field quality-control reports.

1.4 QUALITY ASSURANCE

A. Regulatory Requirements and Governing Standards:

1. Comply with backflow prevention and all other requirements of the Public Health Code and the International Plumbing Code (whichever is more stringent) and coordinate with the certified well system operator when obtaining low volume water makeup to the fire suppression water system from the well water system.
2. Comply with standards of authorities having jurisdiction for fire-suppression water-service piping, including materials, hose threads, installation, and testing.
3. Tank: ANSI/AWWA D120-09: Thermosetting Fiberglass-Reinforced Plastic Tanks.
4. Tank Manufacturer shall be recognized by Underwriters Laboratories (UL) as a manufacturer of tanks listed to the UL-1316 standard.
5. American Concrete Institute (ACI) standard ACI 318-11, Building Code Requirements for Structural Concrete.

B. Components shall bear label, stamp, or other markings of specified testing agency.

C. Comply with the "Approval Guide," published by FM Global, or UL's "Fire Protection Equipment Directory" for fire-service-main products.

D. NFPA Compliance:
1. Comply with NFPA 24 for materials, installations, tests, flushing, and valve and hydrant supervision for fire-suppression water-service piping.
2. Comply with NFPA 22 for materials and installation of the underground fire suppression water storage tank.

1.5 DELIVERY, STORAGE, AND HANDLING

A. Transport, handle and store Fire Suppression Water Storage tank in complete accordance with the requirements of the tank manufacturer, DOT and local authorities. Coordinate timing of delivery, on-site storage location, and protection of tank with school administration, General Contractor/Construction Manager, and Site Contractor.

B. Preparation for Transport: Prepare valves according to the following:

1. Ensure that valves are dry and internally protected against rust and corrosion.
2. Protect valves against damage to threaded ends and flange faces.
3. Set valves in best position for handling. Set valves closed to prevent rattling.

C. During Storage: Use precautions for valves according to the following:

1. Do not remove end protectors unless necessary for inspection; then reinstall for storage.
2. Protect from weather. Store indoors and maintain temperature higher than ambient dew point temperature. Support off the ground or pavement in watertight enclosures when outdoor storage is necessary.

D. Handling: Use sling to handle valves if size requires handling by crane or lift. Rig valves to avoid damage to exposed parts. Do not use handwheels or stems as lifting or rigging points.

E. Deliver piping with factory-applied end caps. Maintain end caps through shipping, storage, and handling to prevent pipe-end damage and to prevent entrance of dirt, debris, and moisture.

F. Protect stored piping from moisture and dirt. Elevate above grade. Do not exceed structural capacity of floor when storing inside.

G. Protect flanges, fittings, and specialties from moisture and dirt.

1.6 COORDINATION

A. Coordinate location verification and connection to existing pre-piped site fire service piping with the Site Contractor..

B. Coordinate protection of existing pre-piped site fire service main where routing under the new building addition with the Site Contractor and according to the requirements of NFPA 24.

PART 2 - PRODUCTS

2.1 DUCTILE-IRON PIPE AND FITTINGS

A. Mechanical-Joint, Ductile-Iron Pipe: AWWA C151, cement-lined, with mechanical-joint bell and plain spigot end.

B. Push-on-Joint, Ductile-Iron Pipe: AWWA C151, cement-lined, with push-on-joint bell and plain spigot end.

C. Mechanical-Joint, Ductile-Iron Fittings: AWWA C110, ductile- or gray-iron standard pattern or AWWA C153, ductile-iron compact pattern.

1. Glands, Gaskets, and Bolts: AWWA C111, ductile- or gray-iron glands, rubber gaskets, and steel bolts.

D. Push-on-Joint, Ductile-Iron Fittings: AWWA C153, ductile-iron compact pattern.

1. Gaskets: AWWA C111, rubber.

E. Flanges: ASME B16.1, Class 125, cast iron.

2.2 SPECIAL PIPE FITTINGS

A. Ductile-Iron Deflection Fittings:

1. Manufacturers: Subject to compliance with requirements, provide products by one (1) of the following:

   a. EBAA Iron, Inc.

2. Description: Compound, ductile-iron coupling fitting with sleeve and one (1) or two (2) flexing sections for up to 15-degree deflection, gaskets, and restrained-joint ends complying with AWWA C110 or AWWA C153. Include AWWA C111, ductile-iron glands, rubber gaskets, and steel bolts.
3. Pressure Rating: 250 psig minimum.

2.3 PIPING SPECIALTIES

A. Transition Fittings: Manufactured fitting or coupling same size as, with pressure rating at least equal to and ends compatible with, piping to be joined.

2.4 VALVES

A. UL-Listed or FM-Approved Gate Valves (Main Service Shutoff):

1. Manufacturers: Subject to compliance with requirements, provide products by one (1) of the following:

   a. Clow Valve Company; a division of McWane, Inc.
   b. Crane Co.; Crane Valve Group; Stockham Division
   c. Hammond Valve
   d. Milwaukee Valve Company
   e. Mueller Co.; Water Products Division

2. 175-psig, UL-Listed or FM-Approved, Iron, OS&Y, Gate Valves:

   a. Description: Iron body and bonnet and bronze seating material.
   b. Standards: UL 262 and "Approval Guide," published by FM Global, listing.
   c. Pressure Rating: 175 psig minimum.
   d. End Connections: Flanged or grooved.
   e. Provide tamper switch.

2.5 ALARM DEVICES

A. General: UL 753 and "Approval Guide," published by FM Global, listing, of types and sizes to mate and match piping and equipment.

B. Supervisory Switches: Single pole, double throw; designed to signal valve in other than fully open position.

2.6 FIRE SUPPRESSION WATER STORAGE TANK

A. Approved Manufacturers:

B. General: Single-Wall Fiberglass Reinforced Plastic (FRP) Underground Water Tank

C. Loading Conditions:

1. Internal Load — Tank shall be designed to withstand a 5-psig air-pressure test with a 5:1 safety factor.
2. Surface Loads — Tank shall be designed to withstand surface H-20 and HS-20 axle loads when properly installed according to manufacturer's current Installation Manual and Operating Guidelines.
3. External Hydrostatic Pressure for Underground Water Tank —Tank shall be designed for 7 feet of overburden over the top of the tank, the hole fully flooded, and a safety factor of 5:1 against general buckling.

D. Product Storage
1. Tank shall be vented to atmospheric pressure.
2. Tank shall be capable of handling liquids with specific gravity up to 1.1.
3. Tank shall be compatible with liquids identified in the manufacturer's standard limited warranty.

E. Materials
1. Tank shall be manufactured with a laminate consisting of resin and glass fiber reinforcement only. No sand/silica fillers or resin extenders shall be used.
2. All internal mounting hardware shall be manufactured of rustproof materials

F. Design
1. Tank shall be designed as a single wall vessel.
2. Tank shall be manufactured with structural ribs which are fabricated as an integral part of the tank wall.

G. Capacity and Dimensions
1. Tank shall have nominal capacity of 20,000 gallons.
2. Tank shall have nominal outside diameter of 10 feet.

H. Accessories
1. Access openings: All human access openings shall have a diameter of 24 inches nominal, complete with riser, lid and necessary hardware. Approximate location as shown on Drawings.
2. Piping and Fittings:
   a. Tank shall be equipped with factory-installed threaded fittings or pipe stubs.
   b. PVC piping shall at the minimum meet the requirements of ANSI Schedule 40.
   c. All flanged nozzles shall be flanged and flat-faced, and conform to Class 150 bolting patterns as specified in ANSI/ASME B16.5-2009.
   d. Steel NPT fittings shall withstand a minimum of 150 foot-pounds of torque and 1,000 foot-pounds of bending, both with a 2:1 safety factor.
   e. Locations of fittings and piping shall be approximately as shown on Drawings.
3. Attached access risers shall be PVC or FRP as supplied by the tank manufacturer, 24-inch diameter, attached to access openings during installation utilizing adhesive or FRP bonding kits as supplied by the tank manufacturer.
4. Manway openings:
   a. Manway openings shall be flanged, 22" I.D. and complete with gaskets, bolts and steel cover as shown on Drawings.

b. Manway openings shall be designed to withstand 5 psig test pressure with a 5:1 safety factor.
c. Provide 48-inch diameter FRP manway extension to grade from tank manway opening, with gasketed, bolted FRP cover, and FRP ladder.

5. Ladders: Ladders shall be the standard FRP ladder as supplied by tank manufacturer.
6. Anchoring
   a. Anchoring straps shall be FRP anchoring straps as supplied by tank manufacturer.
   b. Number and location of straps shall be as specified by the tank manufacturer.
   c. Prefabricated concrete deadmen, which are designed to ACI Standard 318-11, shall be supplied by the tank manufacturer.

PART 3 - EXECUTION

3.1 EARTHWORK

A. Comply with excavating, trenching, and backfilling requirements in Section 312310 "Earth Moving."

3.2 PIPING INSTALLATION

A. Coordinate connection to existing Site Fire Service Piping with Site Contractor and Construction Supervisor.

B. Connect to existing 6 inch fire service piping outside the school building in the vicinity of the basement, and extend through foundation wall into the Basement “Pump” Room. Provide flange for continuation of building service entrance installation.

C. Connect to existing 6 inch fire service piping outside the well equipment building , and extend through foundation wall into the well building at approximately same elevation as fire pump inlet. Provide flange for continuation of fire service piping to fire pump package.

D. Connect to all other fire suppression system-related piping (including fire suppression water storage tank piping) routing through the well building exterior wall and provide all exterior piping/accessories for complete piping systems such as pump suction, discharge and test/test header; tank fill(s), vent, suction, return, overflow. Coordinate work with Site Contractor.

E. Comply with NFPA 24 for fire-service-main piping materials and installation.

F. Install ductile-iron, water-service piping according to AWWA C600 and AWWA M41.

   1. Install encasement for piping according to ASTM A 674 or AWWA C105.
   2. Bury piping with depth of cover over top at least 60 inches.

G. Install piping by tunneling or jacking, or combination of both, under streets and other obstructions that cannot be disturbed.

H. Install underground piping with restrained joints at horizontal and vertical changes in direction. Use restrained-joint piping, thrust blocks, anchors, tie-rods and clamps, and other supports.

I. Comply with requirements in Section 211313 “Wet-Pipe Sprinkler Systems” for fire-suppression-water piping inside the buildings, downstream of entrance flanges.

J. Install sleeves for piping penetrations of walls, ceilings, and floors. Comply with requirements for sleeves specified in Section 210500 "Common Work Results for Fire Suppression".

K. Install sleeve seals for piping penetrations of concrete walls and slabs. Comply with requirements for sleeve seals specified in Section 210500 "Common Work Results for Fire Suppression".

3.3 JOINT CONSTRUCTION

A. Install couplings, flanges, flanged fittings, unions, nipples, and transition and special fittings that have finish and pressure rating same as or higher than systems pressure rating for aboveground applications unless otherwise indicated.

B. Remove scale, slag, dirt, and debris from outside and inside of pipes and fittings before assembly.

C. Ductile-Iron Piping, Gasketed Joints for Fire-Service-Main Piping: UL 194.

D. Ductile-Iron Piping, Grooved Joints: Cut-groove pipe. Assemble joints with grooved-end, ductile-iron-piping couplings, gaskets, lubricant, and bolts.

E. Flanged Joints: Select appropriate gasket material in size, type, and thickness suitable for water service. Join flanges with bolts according to ASME B31.9.

F. Do not use flanges or unions for underground piping.

3.4 ANCHORAGE INSTALLATION

A. Anchorage, General: Install water-distribution piping with restrained joints. Anchorages and restrained-joint types that may be used include the following:

1. Concrete thrust blocks.
2. Locking mechanical joints.
3. Set-screw mechanical retainer glands.
4. Bolted flanged joints.
5. Heat-fused joints.
6. Pipe clamps and tie rods.

B. Install anchorages for tees, plugs and caps, bends, crosses, valves, and hydrant branches in fire-suppression water-service piping according to NFPA 24 and the following:

1. Gasketed-Joint, Ductile-Iron, Water-Service Piping: According to AWWA C600.

C. Apply full coat of asphalt or other acceptable corrosion-resistant material to surfaces of installed ferrous anchorage devices.

3.5 VALVE INSTALLATION

A. UL-Listed or FM-Approved Gate Valves: Comply with NFPA 24.

3.6 ALARM DEVICE INSTALLATION

A. General: Comply with NFPA 24 for devices and methods of valve supervision.

B. Supervisory Switches: Supervise valves in open position.

1. Valves: Grind away portion of exposed valve stem. Bolt switch, with plunger in stem depression, to OS&Y gate-valve yoke.

C. Connect alarm devices to building's fire-alarm system. Wiring and fire-alarm devices are specified in Division 28 Sections.

1. Valves: Grind away portion of exposed valve stem. Bolt switch, with plunger in stem depression, to OS&Y gate-valve yoke.

D. Connect alarm devices to building's fire-alarm system. Wiring and fire-alarm devices are specified in Division 28 Sections.

3.7 TANK INSTALLATION

I. Fire Suppression Water Storage Tank shall be installed according to tank manufacturer’s installation manual and operating guidelines for fiberglass underground storage tanks in effect at time of installation, and in accordance with all codes and authorities having jurisdiction.

3.8.1 CONNECTIONS

A. Connect fire-suppression water-service piping to existing site fire service main, coordinating required fittings with Site Contractor.

B. Connect fire-suppression water-service piping to interior fire-suppression piping, at well building and at school building basement.

C. Connect drain and overflow piping to site storm drainage systems, coordinating required fittings with Site Contractor.

3.9 FIELD QUALITY CONTROL

A. Use test procedure prescribed by authorities having jurisdiction or, if method is not prescribed by authorities having jurisdiction, use procedure described below.

B. Tank Tests: Tank shall be tested according to manufacturer’s installation manual and operating guidelines for fiberglass underground storage tanks in effect at time of installation.

C. Piping Tests: Conduct piping tests before joints are covered and after concrete thrust blocks have hardened sufficiently. Fill pipeline twenty-four (24) hours before testing and apply test pressure to stabilize system. Use only potable water.

D. Hydrostatic Tests: Test at not less than one-and-one-half (1.5) times the working pressure for two (2) hours.

1. Increase pressure in 50-psig increments and inspect each joint between increments. Hold at test pressure for one hour; decrease to 0 psig. Slowly increase again to test pressure and hold for one (1) more hour. Maximum allowable leakage is 2 quarts per hour per 100 joints. Remake leaking joints with new materials and repeat test until leakage is within allowed limits.

E. Prepare test and inspection reports.

3.10 CLEANING

A. Clean fire-suppression water-service piping as follows:

1. Purge new piping systems and parts of existing systems that have been altered, extended, or repaired before use.
2. Use purging and disinfecting procedure prescribed by authorities having jurisdiction or, if method is not prescribed by authorities having jurisdiction, use procedure described in NFPA 24 for flushing of piping. Flush piping system with clean, potable water until dirty water does not appear at points of outlet.

B. Prepare reports of purging activities.

3.11 TANK WARRANTY

1. Tank Warranty shall be manufacturer's limited warranty in effect at the time of purchase.

3.12 PIPING SCHEDULE

A. Underground and under slab fire-suppression water-service and all other fire-suppression system-related exterior underground piping except for drain and vent piping shall be one of the following:

1. Mechanical-joint, cement-lined ductile-iron pipe; mechanical-joint, ductile- or gray-iron, standard-pattern fittings; glands, gaskets, and bolts; and gasketed joints.
2. Push-on-joint, cement-lined ductile-iron pipe; push-on-joint, ductile-iron compact-pattern fittings; and gasketed joints.

B. Aboveground fire-suppression water-service piping shall be grooved-end, ductile-iron pipe; grooved-end, ductile-iron pipe appurtenances; and grooved joints.

C. Drain and vent piping shall be Schedule 40 PVC, DWV fitting style.

3.13 VALVE SCHEDULE

A. Standard pressure, above ground fire suppression water service shutoff valves NPS 3(DN 80) and larger shall be the following:

1. 175-psig, UL-listed and FM-approved, iron, OS&Y gate valves.

END OF SECTION 211100

SECTION 211313 - WET-PIPE SPRINKLER SYSTEMS

PART 1 - GENERAL

1.1 RELATED DOCUMENTS

A. Drawings and general provisions of the Contract, including General and Supplementary Conditions and Division 01 Specification Sections, apply to this Section.

1.2 SUMMARY

A. Section Includes:

1. Pipes, fittings, and specialties.
2. Fire-protection valves.
3. Fire-department connections.
4. Sprinklers.
5. Alarm devices.
6. Pressure gages.

B. Related Sections:

1. Section 211100 "Facility Fire Suppression Water-Service Piping" for fire service piping outside the school and well equipment buildings, fire service entrances into buildings..

1.3 DEFINITIONS

A. Standard-Pressure Sprinkler Piping: Wet-pipe sprinkler system piping designed to operate at working pressure of 175 psig maximum.

1.4 SYSTEM DESCRIPTIONS

A. Wet-Pipe Sprinkler System: Automatic sprinklers are attached to piping containing water and that is connected to water supply through alarm valve. Water discharges immediately from sprinklers when they are opened. Sprinklers open when heat melts fusible link or destroys frangible device. Hose connections are included if indicated.

1.5 PERFORMANCE REQUIREMENTS

A. Standard-Pressure Piping System Component: Listed for 175-psig minimum working pressure.

B. Delegated Design: Design sprinkler system(s), including comprehensive engineering analysis by a qualified professional engineer, using performance ratings of fire pump submitted to and approved by the Authority Having Jurisdiction and the Engineer.

C. Sprinkler system design shall be approved by authorities having jurisdiction.

1. Margin of Safety for Available Water Flow and Pressure: Ten percent (10%), including losses through water-service piping, valves, and other devices..
2. Sprinkler Occupancy Hazard Classifications:

a. Building Service Areas, excluding Storage areas: Ordinary Hazard, Group 1.
b. Mechanical and or Electrical Equipment Rooms: Ordinary Hazard, Group 1.
c. Storage Areas, including Pantries, Coolers and Freezers, Janitor's Closets, File and Record Rooms: Ordinary Hazard, Group 2.
d. Offices, Toilet and Shower Rooms, Classrooms, Gymnasium, Cafeteria, Food Serving Area, and General Public Travel Areas, Attics and combustible concealed spaces not containing major items of mechanical or electrical equipment: Light Hazard.
e. Kitchen: Ordinary Hazard, Group 1.
f. Well Equipment Building: Ordinary Hazard, Group 1.

3. Minimum Density for Automatic-Sprinkler Piping Design:

a. Light-Hazard Occupancy: 0.10 gpm over 1500-sq. ft. area.
b. Ordinary-Hazard, Group 1 Occupancy: 0.15 gpm over 1500-sq. ft. area.
c. Ordinary-Hazard, Group 2 Occupancy: 0.20 gpm over 1500-sq. ft. area.

4. Maximum Protection Area per Sprinkler: Per UL listing.
5. Maximum Protection Area per Sprinkler (actual maximum allowed depends on construction encountered and approval restrictions of sprinkler types used):

a. Light Hazard Occupancies: 225 sq. ft.
b. Ordinary Hazard Occupancies: 130 sq. ft.

6. Hose-Stream Allowance: Per NFPA 13, 11.2.3.1.3, where tanks supply sprinklers only, hose allowance is not required.

7. Water Supply Duration:
a. Light Hazard Occupancies: 30 minutes.
b. Ordinary Hazard Occupancies: 60 minutes (remote or central station fire alarm will be provided)

D. Seismic Performance: Sprinkler piping shall withstand the effects of earthquake motions determined according to NFPA 13 and the Building Code of the State of Connecticut.

1.6 SUBMITTALS

A. Product Data: For each type of product indicated. Include size, rated capacities, operating characteristics, electrical characteristics, and furnished specialties and accessories.
1. All items critical to system performance shall be listed for the intended use.
2. All items not critical to system performance (drain system components, for instance) need not be listed, but shall be submitted to and approved by the authority having jurisdiction.

B. Shop Drawings: For wet-pipe sprinkler systems. Include plans, elevations, sections, details, and attachments to other work.

1. Wiring Diagrams: For power, signal, and control wiring.

C. Delegated-Design Submittal: For sprinkler systems indicated to comply with performance requirements and design criteria, including analysis data signed and sealed by the qualified professional engineer responsible for their preparation. Refer to requirements in Paragraph 1.5.B of this Section.

D. Coordination Drawings: Sprinkler systems, drawn to scale, on which the following items are shown and coordinated with each other, using input from installers of the items involved:

1. Domestic water, fuel gas, drainage and vent piping
2. HVAC hydronic, steam and steam condensate piping.
3. HVAC ductwork
4. HVAC equipment
5. Items penetrating finished ceiling including but not limited to the following:

a. Lighting fixtures.
b. Air outlets and inlets.

E. Qualification Data: For qualified Installer and professional engineer.

F. Approved Sprinkler Piping Drawings: Working plans, prepared according to NFPA 13, that have been approved by authorities having jurisdiction including fire marshal and fire insurance underwriter, including hydraulic calculations.

G. Basis for parameters for sprinkler design: Refer to Paragraph 1.5.B of this Section.

H. Field Test Reports and Certificates: Indicate and interpret test results for compliance with performance requirements and as described in NFPA 13. Include "Contractor's Material and Test Certificate for Aboveground Piping, and "Contractor’s Material and Test Certificate for Private Fire Mains”.

I. Field quality-control reports.

J. Operation and Maintenance Data: For sprinkler specialties to include in emergency, operation, and maintenance manuals.

1.7 QUALITY ASSURANCE

A. Installer Qualifications:

1. Installer's responsibilities include designing, fabricating, and installing sprinkler systems and providing professional engineering services needed to assume engineering responsibility. Base calculations on performance ratings of fire pump submitted to and approved by the Authority Having Jurisdiction and the Engineer.

a. Engineering Responsibility: Preparation of working plans, calculations, and field test reports by a qualified professional engineer.

B. Electrical Components, Devices, and Accessories: Listed and labeled as defined in NFPA 70, by a qualified testing agency, and marked for intended location and application.

C. NFPA Standards: Sprinkler system equipment, specialties, accessories, installation, and testing shall comply with the following:

1. NFPA 13, "Installation of Sprinkler Systems."
2. NFPA 24, "Installation of Private Fire Service Mains and Their Appurtenances."
3. Refer to other Division 21 Sections for NFPA Standards requirements pertaining to Fire Pump and Fire Protection Water Storage Tank installations.

1.8 COORDINATION

A. Coordinate layout and installation of sprinklers with other construction that penetrates ceilings, including light fixtures, HVAC equipment, and partition assemblies.

1.9 EXTRA MATERIALS

A. Furnish extra materials that match products installed and that are packaged with protective covering for storage and identified with labels describing contents.

1. Sprinkler Cabinets: Finished, wall-mounted, steel cabinet with hinged cover, and with space for minimum of six (6) spare sprinklers plus sprinkler wrench. Include number of sprinklers required by NFPA 13 and sprinkler wrench. Include separate cabinet with sprinklers and wrench for each type of sprinkler used on Project.

PART 2 - PRODUCTS

2.1 PIPING MATERIALS

A. Comply with requirements in "Piping Schedule" Article for applications of pipe, tube, and fitting materials, and for joining methods for specific services, service locations, and pipe sizes.

2.2 STEEL PIPE AND FITTINGS

A. Standard Weight, Black Steel Pipe: ASTM A 53, threaded end.

B. Standard Weight, Galvanized-Steel Pipe: ASTM A 53, Type E, Grade B., threaded ends.

C. Standard Weight, Galvanized-Steel Pipe, ASTM A 53, Type E , Grade B., with cut-grooved ends

D. Schedule 10, Black-Steel Pipe: ASTM A 135 or ASTM A 795, Schedule 10 in NPS 5 (DN 125) and smaller; and NFPA 13-specified wall thickness in NPS 6 to NPS 10 (DN 150 to DN 250), threaded grooved or flanged joints. Welded joints may be used on piping 4 inches and larger where and as approved by Code, Owner’s fire insurance underwriter, and authorities having jurisdiction; however, all welding shall be performed OFF-SITE.

E. Black-Steel Pipe Nipples: ASTM A 733, made of ASTM A 53, standard-weight, seamless steel pipe with threaded ends.

F. Uncoated, Steel Couplings: ASTM A 865, threaded.

G. Uncoated, Gray-Iron Threaded Fittings: ASME B16.4, Class 125, standard pattern.

H. Malleable- or Ductile-Iron Unions: UL 860.

I. Cast-Iron Flanges: ASME 16.1, Class 125.

J. Steel Flanges and Flanged Fittings: ASME B16.5, Class 150.

K. Steel Welding Fittings: ASTM A 234 and ASME B16.9.

L. Grooved-Joint, Steel-Pipe Appurtenances:

1. Manufacturers: Subject to compliance with requirements, provide products by one (1) of the following:

   a. Anvil International, Inc.
   b. National Fittings, Inc.
   c. Shurjoint Piping Products
   d. Tyco Fire & Building Products LP
   e. Victaulic Company

2. Pressure Rating: 175 psig.
3. Uncoated, Grooved-End Fittings for Steel Piping: ASTM A 47, malleable-iron casting or ASTM A 536, ductile-iron casting; with dimensions matching steel pipe.
4. Grooved-End-Pipe Couplings for Steel Piping: AWWA C606 and UL 213, rigid pattern, unless otherwise indicated, for steel-pipe dimensions. Include ferrous housing sections, EPDM-rubber gasket, and bolts and nuts.

2.3 PIPING JOINING MATERIALS

A. Pipe-Flange Gasket Materials: AWWA C110, rubber, flat face, 1/8 inch thick.

1. Class 125, Cast-Iron Flanges and Class 150, Bronze Flat-Face Flanges: Full-face gaskets.

B. Metal, Pipe-Flange Bolts and Nuts: ASME B18.2.1, carbon steel unless otherwise indicated.

C. Welding Filler Metals: Comply with AWS D10.12 for welding materials appropriate for wall thickness and chemical analysis of steel pipe being welded.

2.4 LISTED FIRE-PROTECTION VALVES

A. General Requirements:

1. Valves shall be UL listed and FM approved.
2. Minimum Pressure Rating for Standard-Pressure Piping: 175 psig.

B. Ball Valves:

1. Manufacturers: Subject to compliance with requirements, provide products by one (1) of the following:

   a. Anvil International, Inc.
   b. Victaulic Company of America

c. NIBCO, INC.

2. Standard: UL 1091 except with ball instead of disc.
3. Valves NPS 1-1/2 (DN 40) and Smaller: Bronze body with threaded ends.
4. Valves NPS 2 and NPS 2-1/2 (DN 50 and DN 65): Bronze body with threaded ends or ductile-iron body with grooved ends.
5. Valves NPS 3 (DN 80): Ductile-iron body with grooved ends.

C. Bronze Butterfly Valves (NPS 2 and Under):

1. Manufacturers: Subject to compliance with requirements, provide products by one (1) of the following:

   a. Fivalco Inc.
   b. Global Safety Products, Inc.
   c. Milwaukee Valve Company

2. Standard: UL 1091.
3. Pressure Rating: 175 psig.
4. Body Material: Bronze.
5. End Connections:

   a. Under NPS 2: Threaded.
   b. NPS 2: Threaded or grooved

6. Full port, slow close
7. Built-in tamper switch

D. Iron Butterfly Valves (NPS 2-1/2 to NPS 4):

1. Manufacturers: Subject to compliance with requirements, provide products by one (1) of the following:

   a. Kennedy Valve; a division of McWane, Inc.
   b. Milwaukee Valve Company
   c. NIBCO INC.
   d. Tyco Fire & Building Products LP
   e. Victaulic Company

2. Standard: UL 1091.
3. Pressure Rating: 175 psig.
4. Body Material: Ductile iron.
5. Disc and Stem: 316 stainless steel disc.
6. Seat: EPDM.
7. Style: Wafer.
8. End Connections: Grooved.

E. Check Valves:

1. Manufacturers: Subject to compliance with requirements, provide products by one (1) of the following:

a. Kennedy Valve; a division of McWane, Inc.
b. Milwaukee Valve Company
c. Mueller Co.; Water Products Division
d. Reliable Automatic Sprinkler Co., Inc.
e. Tyco Fire & Building Products LP
f. Victaulic Company
g. Viking Corporation

2. Standard: UL 312.
3. Pressure Rating: 250 psig minimum.
4. Type: Swing check.
5. Body Material: Cast iron.
6. End Connections: Grooved.

F. Bronze OS&Y Gate Valves (NPS 2 and Smaller):

1. Manufacturers: Subject to compliance with requirements, provide products by one (1) of the following:

a. Crane Co.; Crane Valve Group; Crane Valves
b. Crane Co.; Crane Valve Group; Stockham Division
c. Milwaukee Valve Company
d. NIBCO INC.
e. United Brass Works, Inc.

2. Standard: UL 262.
3. Pressure Rating: 175 psig.
4. Body Material: Bronze.
5. Disc: Solid wedge type.
6. End Connections: Threaded.

G. Iron OS&Y Gate Valves (NPS 2-1/2 and larger):

1. Manufacturers: Subject to compliance with requirements provide products by one (1) of the following:

a. Crane Co.; Crane Valve Group; Stockham Division
b. Hammond Valve
c. Milwaukee Valve Company
d. Mueller Co.; Water Products Division
e. Tyco Fire & Building Products LP

2. Standard: UL 262.
3. Pressure Rating: 250 psig minimum.
4. Body Material: Cast or ductile iron.
5. Trim and Stem: Bronze.
6. End Connections: Grooved.

H. Indicating Valves on piping to alarm devices such as electric alarm bells:

1. Manufacturers: Subject to compliance with requirements, provide products by one (1) of the following:

    a. Kennedy Valve; a division of McWane, Inc.
    b. Milwaukee Valve Company
    c. NIBCO INC.
    d. Tyco Fire & Building Products LP
    e. Victaulic Company

2. Standard: UL 1091.
3. Pressure Rating: 175 psig minimum.
4. Valves NPS 2 (DN 50) and Smaller:

    a. Valve Type: Ball or butterfly.
    b. Body Material: Bronze.
    c. End Connections: Threaded.

5. Valve Operation: Integral electrical, 115-V ac, prewired, single-circuit, supervisory switch.

2.5 TRIM AND DRAIN VALVES

A. General Requirements:

1. Standard: UL's "Fire Protection Equipment Directory" listing or "Approval Guide," published by FM Global, listing.
2. Pressure Rating: 175 psig minimum.

B. Angle Valves:

1. Manufacturers: Subject to compliance with requirements, provide products by one (1) of the following:

    a. Fire Protection Products, Inc.
    b. United Brass Works, Inc.

C. Ball Valves:

1. Manufacturers: Subject to compliance with requirements, provide products by one (1) of the following:

    a. Conbraco Industries, Inc.; Apollo Valves
    b. Kennedy Valve; a division of McWane, Inc.
    c. Milwaukee Valve Company
    d. NIBCO INC.
    e. Tyco Fire & Building Products LP
    f. Victaulic Company

D. Globe Valves:

1. Manufacturers: Subject to compliance with requirements, provide products by one (1) of the following:

    a. Fire Protection Products, Inc.
    b. United Brass Works, Inc.

E. Plug Valves:

1. Manufacturers: Subject to compliance with requirements, provide products by one (1) of the following

    a. Southern Manufacturing Group

2.6 SPECIALTY VALVES

A. General Requirements:

1. Standard: UL's "Fire Protection Equipment Directory" listing or "Approval Guide," published by FM Global, listing.
2. Pressure Rating:

    a. Standard-Pressure Piping Specialty Valves: 175 psig minimum.

3. Body Material: Cast or ductile iron.
4. Size: Same as connected piping.
5. End Connections: Flanged or grooved.

B. Alarm Valves:

1. Manufacturers: Subject to compliance with requirements, provide products by one (1) of the following:

    a. Globe Fire Sprinkler Corporation
    b. Reliable Automatic Sprinkler Co., Inc.
    c. Tyco Fire & Building Products LP
    d. Victaulic Company
    e. Viking Corporation

2. Basis of Design: **Reliable Model E**
3. Standard: UL 193.
4. Design: For horizontal or vertical installation.
5. Include trim sets for bypass, drain, electrical sprinkler alarm switch, pressure gages, retarding chamber, and fill-line attachment with strainer.
6. Drip Cup Assembly: Pipe drain without valves and separate from main drain piping.

C. Automatic (Ball Drip) Drain Valves:

1. Manufacturers: Subject to compliance with requirements, provide products by one (1) of the following:

    a. AFAC Inc.
    b. Reliable Automatic Sprinkler Co., Inc.

c. Tyco Fire & Building Products LP

2. Standard: UL 1726.
3. Pressure Rating: 175 psig minimum.
4. Type: Automatic draining, ball check.
5. Size: NPS 3/4 (DN 20).
6. End Connections: Threaded.

2.7 FIRE-DEPARTMENT CONNECTION

A. Wall-mounted Fire-Department Connection

1. Manufacturers: Subject to compliance with requirements, provide products by one (1) of the following:

a. Fire-End & Croker Corporation
b. Fire Protection Products, Inc.
c. Guardian Fire Equipment, Inc.
d. Potter-Roemer, Inc.

2. Standards: UL 405 Listed, FM approved.
3. Type: Exposed, wall-mounted, with wall plate.
4. Pressure Rating: 175 psig minimum
5. Body Material: Cast brass.
6. Inlets: 2½ inches, brass, with threads according to NFPA 1963 and matching local fire-department sizes and threads. (Preliminary thread selection: NST threads; make final confirmation with Ellington Fire Department prior to ordering.) Include extension pipe nipples, brass lugged swivel connections, and check devices or clappers.
7. Caps: Brass, lugged type, with gasket and chain.
8. Escutcheon Plate: Round, brass, wall type.
9. Outlet: Rear, with pipe threads.
10. Number of Inlets: Two (2).
11. Escutcheon Plate Marking: Similar to "AUTO SPKR".
12. Outlet Size: NPS 4 (DN 100).
13. Basis of Design: Potter-Roemer **Figure 5751**.

2.8 SPRINKLER SPECIALTY PIPE FITTINGS

A. Branch Outlet Fittings:

1. Manufacturers: Subject to compliance with requirements, provide products by one (1) of the following

a. Anvil International, Inc.
b. National Fittings, Inc.
c. Shurjoint Piping Products
d. Tyco Fire & Building Products LP
e. Victaulic Company

2. Standard: UL 213.
3. Pressure Rating: 175 psig minimum.

4. Body Material: Ductile-iron housing with EPDM seals and bolts and nuts.
5. Type: Mechanical-T and -cross fittings.
6. Configurations: Snap-on and strapless, ductile-iron housing with branch outlets.
7. Size: Of dimension to fit onto sprinkler main and with outlet connections as required to match connected branch piping.
8. Branch Outlets: Grooved or threaded.

B. Flow Detection and Test Assemblies:

1. Manufacturers: Subject to compliance with requirements, provide products by one (1) of the following:

   a. AGF Manufacturing Inc.
   b. Reliable Automatic Sprinkler Co., Inc.
   c. Tyco Fire & Building Products LP
   d. Victaulic Company

2. Standard: UL's "Fire Protection Equipment Directory" listing or "Approval Guide," published by FM Global, listing.
3. Pressure Rating: 175 psig minimum
4. Body Material: Cast- or ductile-iron housing with orifice, sight glass, and integral test valve.
5. Size: Same as connected piping.
6. Inlet and Outlet: Threaded.

C. Branch Line Testers:

1. Manufacturers: Subject to compliance with requirements, provide products by one (1) of the following:

   a. Elkhart Brass Mfg. Company, Inc.
   b. Fire-End & Croker Corporation
   c. Potter Roemer

2. Standard: UL 199.
3. Pressure Rating: 175 psig.
4. Body Material: Brass.
5. Size: Same as connected piping.
6. Inlet: Threaded.
7. Drain Outlet: Threaded and capped.
8. Branch Outlet: Threaded, for sprinkler.

D. Sprinkler Inspector's Test Fittings:

1. Manufacturers: Subject to compliance with requirements, provide products by one (1) of the following:

   a. AGF Manufacturing Inc.
   b. Triple R Specialty
   c. Tyco Fire & Building Products LP
   d. Victaulic Company

e. Viking Corporation

2. Standard: UL's "Fire Protection Equipment Directory" listing or "Approval Guide," published by FM Global, listing.
3. Pressure Rating: 175 psig minimum.
4. Body Material: Cast- or ductile-iron housing with sight glass.
5. Size: Same as connected piping.
6. Inlet and Outlet: Threaded.

E. Adjustable Drop Nipples:

1. Manufacturers: Subject to compliance with requirements, provide products by one (1) of the following:

a. CECA, LLC
b. Corcoran Piping System Co.
c. Merit Manufacturing; a division of Anvil International, Inc.

2. Standard: UL 1474.
3. Pressure Rating: 250 psig minimum.
4. Body Material: Steel pipe with EPDM-rubber O-ring seals.
5. Size: Same as connected piping.
6. Length: Adjustable.
7. Inlet and Outlet: Threaded.

F. Flexible, Sprinkler Hose Fittings:

1. Manufacturers: Subject to compliance with requirements, provide products by one (1) of the following:

a. FlexHead Industries, Inc.

2. Standard: UL 2443.
3. Qualifications: Seismically qualified: IBC/ASCE 7.
4. Approvals: UL and FM.
5. Type: Flexible hose for connection to sprinkler, and with bracket for connection to ceiling grid.
6. Pressure Rating: 175 psig minimum.
7. Size: Same as connected piping, for sprinkler.
8. Maximum Length: 5 feet.

2.9 SPRINKLERS

A. Manufacturers: Subject to compliance with requirements, provide all sprinklers by one (1) of the following:

1. Globe Fire Sprinkler Corporation
2. Reliable Automatic Sprinkler Co., Inc.
3. Tyco Fire & Building Products LP
4. Victaulic Company
5. Viking Corporation

B. General Requirements:

1. Standard: UL's "Fire Protection Equipment Directory" listing or "Approval Guide," published by FM Global, listing.
2. Pressure Rating for Automatic Sprinklers: 175 psig minimum.

C. Automatic Sprinklers with Heat-Responsive Element:

1. Nonresidential Applications**:** UL 199.
2. Characteristics: Quick Response, Nominal ½-inch orifice with Discharge Coefficient K of 5.6, and with "Ordinary" temperature classification rating, unless otherwise indicated on the plans or required by NFPA 13 for specific area of application.

D. Sprinkler Finishes:

1. Chrome plated.
2. Bronze.
3. Painted.

E. Special Coatings:

1. Wax.
2. Lead.
3. Corrosion-resistant paint.

F. Sprinkler Escutcheons: Materials, types, and finishes for the following sprinkler mounting applications. Escutcheons for concealed, flush, and recessed-type sprinklers are specified with sprinklers.

1. Ceiling Mounting: Chrome-plated steel, two-piece, with 1-inch vertical adjustment.
2. Sidewall Mounting: Chrome-plated steel, one-piece, flat.

G. Sprinkler Guards:

1. Manufacturers: Subject to compliance with requirements, provide products by one (1) of the following:

   a. Reliable Automatic Sprinkler Co., Inc.
   b. Tyco Fire & Building Products LP
   c. Victaulic Company
   d. Viking Corporation

2. Standard: UL 199.
3. Type: Wire cage with fastening device for attaching to sprinkler.

2.10 ALARM DEVICES

A. Alarm-device types shall match piping and equipment connections.

B. Electrically Operated Alarm Bell:

1. Manufacturers: Subject to compliance with requirements, provide products by one (1) of the following:

    a. Fire-Lite Alarms; a Honeywell company
    b. Notifier; a Honeywell company
    c. Potter Electric Signal Company

2. Basis of Design: Potter Electric Signal Series PBA-AC, with Model BBK-1 weatherproof backbox
3. Standard: UL 464.
4. Type: Vibrating, metal alarm bell; 120 VAC.
5. Backbox: Weatherproof.
6. Size: 8-inch minimum diameter.
7. Finish: Red-enamel factory finish, suitable for outdoor use.

C. Pressure Switches:

1. Manufacturers: Subject to compliance with requirements, provide products by one (1) of the following

    a. Potter Electric Signal Company
    b. System Sensor; a Honeywell company

2. Standard: UL 346.
3. Type: Electrically supervised water-flow switch with retard feature.
4. Components: Single-pole, double-throw switch with normally closed contacts.
5. Design Operation: Rising pressure signals water flow.

D. Valve Supervisory Switches:

1. Manufacturers: Subject to compliance with requirements, provide products by one (1) of the following:

    a. Fire-Lite Alarms; a Honeywell company
    b. Potter Electric Signal Company
    c. System Sensor; a Honeywell company

2. Standard: UL 346.
3. Type: Electrically supervised.
4. Components: Single-pole, double-throw switch with normally closed contacts.
5. Design: Signals that controlled valve is in other than fully open position.

2.11 PRESSURE GAGES

A. Manufacturers: Subject to compliance with requirements, provide products by one (1) of the following:

1. AMETEK, Inc.; U.S. Gauge Division
2. Ashcroft, Inc.
3. Brecco Corporation
4. WIKA Instrument Corporation

B. Standard: UL 393.

C. Dial Size: 3½ to 4½-inch diameter.

D. Pressure Gage Range: 0 to 250 psig minimum.

E. Water System Piping Gage: Include "WATER" or "AIR/WATER" label on dial face.

PART 3 - EXECUTION

3.1 PREPARATION

A. Submit and obtain fire pump approvals from the Authority Having Jurisdiction and the Engineer. Use approved pump's performance ratings for system design calculations required in "Quality Assurance" Article.

3.2 EXTERIOR FIRE-SUPPRESSION SYSTEM–RELATED PIPING

A. Comply with requirements for exterior piping and service entrance piping in Section 211100 "Facility Fire-Suppression Water-Service Piping."

B. Connect wet pipe sprinkler piping to exterior fire-suppression system-related piping at building entrance flanges.

3.3 PIPING INSTALLATION

A. Locations and Arrangements: Drawing plans, schematics, and diagrams indicate general location and arrangement of piping. Install piping as indicated, as far as practical.

1. Deviations from approved working plans for piping require written approval from authorities having jurisdiction. File written approval with Architect before deviating from approved working plans.

B. Piping Standard: Comply with requirements for installation of sprinkler piping in NFPA 13.

C. Install seismic restraints on piping in accordance with the requirements of the Connecticut State Building Code. Flexible sprinkler hose connections shall be seismically qualified per IBC/ASCE 7.

D. Use listed fittings to make changes in direction, branch takeoffs from mains, and reductions in pipe sizes. Install unions adjacent to each valve in pipes NPS 2 (DN 50) and smaller.

E. Install flanges, flange adapters, or couplings for grooved-end piping on valves, apparatus, and equipment having NPS 2-1/2 (DN 65) and larger end connections.

F. Install "Inspector's Test Connection" for each sprinkler zone in wet sprinkler system piping, complete with shutoff valve, and sized and located according to NFPA 13 and per Notes on Fire Protection drawings.

G. Install sprinkler piping with drains for complete system drainage.

H. Install automatic (ball drip) drain valve at check valve for fire-department connection, to drain piping between fire-department connection and check valve. Install drain piping to and spill over floor drain or to outside building.

I. Install alarm devices in piping systems.

J. Install hangers and supports for sprinkler system piping according to NFPA 13. Comply with requirements for hanger materials in NFPA 13.

K. Install pressure gages on riser or feed main and at each sprinkler test connection. Include pressure gages with connection not less than NPS 1/4 (DN 8) and with soft metal seated globe valve, arranged for draining pipe between gage and valve. Install gages to permit removal, and install where they will not be subject to freezing.

L. Install antifreeze-charged wet-pipe system in strict accordance with the requirements of NFPA 13 and local authorities having jurisdiction.

M. Fill sprinkler system piping with water.

N. Install sleeves for piping penetrations of walls, ceilings, and floors. Comply with requirements for sleeves specified in Section 210500 "Common Work Results for Fire-Suppression”.

O. Install sleeve seals for piping penetrations of concrete walls and slabs. Comply with requirements for sleeve seals specified in Section 210500 "Common Work Results for Fire-Suppression”.

P. Install escutcheons for piping penetrations of walls, ceilings, and floors. Comply with requirements for escutcheons specified in Section 210500 "Common Work Results for Fire-Suppression”.

3.4 JOINT CONSTRUCTION

A. Install couplings, flanges, flanged fittings, unions, nipples, and transition and special fittings that have finish and pressure ratings same as or higher than system's pressure rating for aboveground applications unless otherwise indicated.

B. Install unions adjacent to each valve in pipes NPS 2 (DN 50) and smaller.

C. Install flanges, flange adapters, or couplings for grooved-end piping on valves, apparatus, and equipment having NPS 2-1/2 (DN 65) and larger end connections.

D. Ream ends of pipes and tubes and remove burrs. Bevel plain ends of steel pipe.

E. Remove scale, slag, dirt, and debris from inside and outside of pipes, tubes, and fittings before assembly.

F. Flanged Joints: Select appropriate gasket material in size, type, and thickness suitable for water service. Join flanges with gasket and bolts according to ASME B31.9.

G. Threaded Joints: Thread pipe with tapered pipe threads according to ASME B1.20.1. Cut threads full and clean using sharp dies. Ream threaded pipe ends to remove burrs and restore full ID. Join pipe fittings and valves as follows:

1. Apply appropriate tape or thread compound to external pipe threads.
2. Damaged Threads: Do not use pipe or pipe fittings with threads that are corroded or damaged.

H. Welded Joints: Construct joints according to AWS D10.12, using qualified processes and welding operators according to "Quality Assurance" Article.

1. Shop-weld pipe joints where welded piping is indicated or allowed in this Section. Field-welding is NOT allowed. Do not use welded joints for galvanized-steel pipe.

I. Steel-Piping, Cut-Grooved Joints: Cut square-edge groove in end of pipe according to AWWA C606. Assemble coupling with housing, gasket, lubricant, and bolts. Join steel pipe and grooved-end fittings according to AWWA C606 for steel-pipe joints.

J. Steel-Piping, Roll-Grooved Joints: Roll rounded-edge groove in end of pipe according to AWWA C606. Assemble coupling with housing, gasket, lubricant, and bolts. Join steel pipe and grooved-end fittings according to AWWA C606 for steel-pipe grooved joints.

K. Dissimilar-Material Piping Joints: Make joints using adapters compatible with materials of both piping systems.

3.5 VALVE AND SPECIALTIES INSTALLATION

A. Install listed fire-protection valves, trim and drain valves, specialty valves and trim, controls, and specialties according to NFPA 13 and authorities having jurisdiction.

B. Install listed fire-protection shutoff valves supervised open, located to control sources of water supply except from fire-department connections. Install permanent identification signs indicating portion of system controlled by each valve.

C. Refer to Section 211100 "Facility Fire-Suppression Water-Service Piping" for backflow prevention on fire service to building.

D. Specialty Valves:

1. General Requirements: Install in vertical position for proper direction of flow, in main supply to system.
2. Alarm Valves: Include bypass check valve and retarding chamber drain-line connection.

3.6 SPRINKLER INSTALLATION

A. Install sprinklers in suspended ceilings in center of acoustical ceiling panels, unless specifically noted otherwise and dimensioned on the plans.

B. Install dry-type sprinklers in unheated areas with wet pipe water supply in heated space to sprinkler tees. Do not install pendent or sidewall, wet-type sprinklers in areas subject to freezing.

C. If and where flexible sprinkler hose fittings are utilized, install sprinklers into flexible, sprinkler hose fittings and install hose into bracket on ceiling grid.

D. Sprinklers which are damaged or marred prior to final acceptance by Owner shall be replaced with entirely new sprinkler. Field painting or any other repair is NOT permitted.

3.7 FIRE-DEPARTMENT CONNECTION INSTALLATION

A. Furnish wall-mounted fire-department connection where indicated on the plans.

B. Install automatic (ball drip) drain valve at check valve for fire-department connection.

3.8 IDENTIFICATION

A. Install labeling and pipe markers on equipment and piping according to requirements in NFPA 13 and Section 210553 “Identification for Fire-Suppression Piping and Equipment”.

B. Identify system components, wiring, cabling, and terminals. Comply with requirements for identification specified in Section 260553 "Identification for Electrical Systems."

3.9 FIELD QUALITY CONTROL

A. Perform tests and inspections.

B. Tests and Inspections:

1. Leak Test: After installation, charge systems and test for leaks. Repair leaks and retest until no leaks exist.
2. Test and adjust controls and safeties. Replace damaged and malfunctioning controls and equipment.
3. Flush, test, and inspect sprinkler systems according to NFPA 13, "Systems Acceptance" Chapter.
4. Energize circuits to electrical equipment and devices.
5. Coordinate with fire-alarm tests. Operate as required.
6. Verify that equipment hose connections meet the requirements of the local fire department equipment.

C. Sprinkler piping system will be considered defective if it does not pass tests and inspections.

D. Prepare test and inspection reports.

3.10 CLEANING

A. Clean dirt and debris from sprinklers.

B. Remove and replace sprinklers with paint other than factory finish.

3.11 DEMONSTRATION

A. Provide four (4) hours of training of Owner's maintenance personnel to adjust, operate, and maintain specialty valves.

3.12 PIPING SCHEDULE

A. Piping (Below Ground or Slab): Comply with requirements for exterior piping and service entrance piping in Section 211100 "Facility Fire-Suppression Water-Service Piping."

B. Piping (Above Ground or Slab) between Fire-Department Connections and Check Valves, and other normally dry piping systems, such as test and or drain piping: Galvanized, standard-weight steel pipe with threaded ends; galvanized cast-iron threaded fittings; and threaded joints; or grooved ends; grooved-end fittings; grooved-end-pipe couplings; and grooved joints.; all fittings shall be galvanized.

C. Sprinkler specialty fittings may be used, downstream of control valves, instead of specified fittings.

D. Standard-pressure, wet-pipe sprinkler system, NPS 2 (DN 50) and smaller shall be the following:

1. Standard-weight (Schedule 40), black-steel pipe with threaded ends; uncoated, gray-iron threaded fittings; and threaded joints.

E. Standard-pressure, wet-pipe sprinkler system, NPS 2-1/2 to NPS 3 (DN 65 to DN 75) shall be one (1) of the following:

1. Standard-weight (Schedule 40) or Schedule 10, black steel pipe with threaded ends; uncoated, gray-iron threaded fittings; and threaded joints.
2. Standard-weight (Schedule 40) or Schedule 10, black-steel pipe with roll-grooved ends; uncoated, grooved-end fittings for steel piping; grooved-end-pipe couplings for steel piping; and grooved joints.

F. Standard-pressure, wet-pipe sprinkler system, NPS 4 (DN 100) and larger, shall be one (1) of the following:

1. Schedule 10 black-steel pipe with cut- or roll-grooved ends; uncoated, grooved-end fittings for steel piping; grooved-end-pipe couplings for steel piping; and grooved joints.
2. Schedule 10 black-steel pipe with plain ends; welding fittings; and welded joints.

3.13 SPRINKLER SCHEDULE

A. Use sprinkler types in subparagraphs below for the following applications:

1. Rooms without Ceilings: Upright sprinklers.
2. Rooms with Suspended Ceilings: Recessed pendent sprinklers.
3. Wall Mounting: Sidewall sprinklers.
4. Spaces Subject to Freezing, where supply piping to sprinkler tee can be run in heated space: Dry Upright sprinklers (when upfed); Dry recessed pendent sprinklers (when downfed); Dry sidewall (when side-fed).
5. Attic Spaces (Light Hazard attics only): Special Application Sprinkler for Protecting Attics.

B. Provide sprinkler types in subparagraphs below with finishes indicated.

1. Recessed Pendent Sprinklers: Chrome-plated, including escutcheon.
2. Upright and Sidewall Sprinklers: Chrome plated in finished spaces exposed to view; rough bronze in unfinished spaces not exposed to view; wax coated where exposed to acids, chemicals, or other corrosive fumes.

C. Provide sprinkler guards on all sprinklers 7’-0” or less above finished floor, and wherever exposed to mechanical damage.

END OF SECTION 211313

SECTION 213113 – ELECTRIC DRIVE, CENTRIFUGAL FIRE PUMP

PART 1 - GENERAL

1.1 RELATED DOCUMENTS

A. Drawings and general provisions of the Contract, including General and Supplementary Conditions and Division 01 Specification Sections, apply to this Section.

1.2 SUMMARY

A. Section Includes:

1. Vertical in-line centrifugal fire pumps.
2. Fire-pump accessories and specialties.
3. Flowmeter systems.

B. The intent is that a factory-piped compact fire pump package, including fire pump, jockey pump and prepiped jockey pipe leg, fire pump controller with automatic transfer switch, jockey pump controller, inlet piping with supervised control valve, outlet piping with relief and check valves, outlet test header tee with supervised control valve, and discharge supervised control valve, all installed on a steel skid, be provided. Performance criteria is cited in this and other Division 21 Sections for various individual components of the packaged system.

1.3 PERFORMANCE REQUIREMENTS

A. Seismic Performance: Fire pumps shall withstand the effects of earthquake motions determined according to State of Connecticut Building Code.

1. The term "withstand" means "the unit will remain in place without separation of any parts from the device when subjected to the seismic forces specified."

B. Pump Equipment, Accessory, and Specialty Pressure Rating: 175 psig (1200 kPa) minimum unless higher pressure rating is indicated.

1.4 ACTION SUBMITTALS

A. Product Data: For each type of product indicated. Include rated capacities, operating characteristics, performance curves, electrical characteristics, and furnished specialties and accessories.

B. Shop Drawings: For fire pumps, motor drivers, and fire-pump accessories and specialties. Include plans, elevations, sections, details, and attachments to other work.

1. Detail equipment assemblies and indicate dimensions, weights, loads, required clearances, method of field assembly, components, and location and size of each field connection.
2. Wiring Diagrams: For power, signal, and control wiring.

1.5 INFORMATIONAL SUBMITTALS

A. Seismic Qualification Certificates: For fire pumps, accessories, and components, from manufacturer.

1. Basis for Certification: Indicate whether withstand certification is based on actual test of assembled components or on calculation.
2. Dimensioned Outline Drawings of Equipment Unit: Identify center of gravity and locate and describe mounting and anchorage provisions.
3. Detailed description of equipment anchorage devices on which the certification is based and their installation requirements.

B. Product Certificates: For each fire pump, from manufacturer.

C. Source quality-control reports.

D. Field quality-control reports.

1.6 CLOSEOUT SUBMITTALS

A. Operation and Maintenance Data: For fire pumps to include in operation and maintenance manuals.

1.7 QUALITY ASSURANCE

A. Electrical Components, Devices, and Accessories: Listed and labeled as defined in NFPA 70, by a qualified testing agency, and marked for intended location and application.

B. NFPA Compliance: Comply with NFPA 20, "Installation of Stationary Pumps for Fire Protection."

1.8 COORDINATION

A. Coordinate sizes and locations of concrete bases with actual equipment provided.

PART 2 - PRODUCTS

2.1 GENERAL REQUIREMENTS FOR CENTRIFUGAL FIRE PUMPS

A. Description: Factory-assembled and -tested fire-pump and driver unit.

B. Base: Fabricated and attached to fire-pump and driver unit with reinforcement to resist movement of pump during seismic events when base is anchored to building substrate.

C. Finish: Red paint applied to factory-assembled and -tested unit before shipping.

2.2 IN-LINE FIRE PUMPS

A. Manufacturers: Subject to compliance with requirements, provide packaged fire pump system, including fire pump, by one of the following:

1. A-C Fire Pump Systems; a business of ITT Industries.
2. Peerless Pump, Inc.
3. Pentair Pump Group; Aurora Pump.

B. Basis of Design, Packaged Fire Pump System: Aurora Model CFPS, with Model 4-383-9C vertical in-line fire pump, 5” suction, 4” discharge.

C. Pump:

1. Standard: UL 448 for in-line pumps for fire service.
2. Casing: Radially split case, cast iron with ASME B16.1 pipe-flange connections.
3. Impeller: Cast bronze, statically and dynamically balanced, and keyed to shaft.
4. Wear Rings: Replaceable bronze.
5. Shaft and Sleeve: Steel shaft with bronze sleeve.

    a. Shaft Bearings: Grease-lubricated ball bearings in cast-iron housing.
    b. Seals: Stuffing box with minimum of four rings of graphite-impregnated braided yarn and bronze packing gland.

6. Mounting: Pump and driver shaft is vertical, with motor above pump and pump on base.

D. Coupling: None or rigid.

E. Driver:

1. Standard: UL 1004A.
2. Type: Electric motor; NEMA MG 1, polyphase Design B.

F. Capacities and Characteristics:

1. Rated Capacity: 500 gpm.
2. Total Rated Head: 75 psi.
3. Inlet Flange: Class 125.
4. Outlet Flange: Class 125.
5. Suction Head Available at Pump: 2 feet.
6. Motor Horsepower: 30 HP.
7. Motor Speed: 3550 gpm.
8. Electrical Characteristics:

a. Volts: 208.
b. Phase: Three.
c. Hertz: 60.
d. Full-Load Amperes: 79.
e. Minimum Circuit Ampacity: 88.
f. Maximum Overcurrent Protection: 125 amps.

9. Pump-Start, Pressure-Switch Setting: 69 psi.
10. Pump-Stop, Pressure-Switch Setting: 84 psi.

2.3 FIRE-PUMP ACCESSORIES AND SPECIALTIES

A. Inlet Fitting: Eccentric tapered reducer at pump suction inlet.

B. Outlet Fitting: Concentric tapered reducer at pump discharge outlet.

C. Hose Valve Manifold Assembly:

1. Standard: Comply with requirements in NFPA 20.
2. Header Pipe: ASTM A 53/A 53M, Schedule 40, galvanized steel with ends threaded according to ASME B1.20.1.
3. Header Pipe Fittings: ASME B16.4, galvanized cast-iron threaded fittings.
4. Automatic Drain Valve: UL 1726.

5. Test Provisions:
   a. Test Connections: Comply with UL 405 except provide outlets without clappers instead of inlets. In lieu of manufacturer-furnished test gates, provide free-standing fire pump test connection, with 18” high vertical pipe/sleeve with polished brass finish. Install in concrete base pad, 3 feet x 3 feet x 6” thick, top flush with adjacent grade.
   b. Body: Angle type, brass, with number of outlets required by NFPA 20.
   c. Escutcheon (Base) Plate: Brass, round.
   d. Hose Valves: UL 668, bronze, with outlet threaded according to NFPA 1963 and matching local fire-department threads. Include caps and chains.
   e. Exposed Parts Finish: Polished brass trim.
   f. Escutcheon Plate Marking: Equivalent to "PUMP TEST CONNECTION."
   g. Approved Manufacturers: Potter-Roemer, Croker
   h. Basis of Design: Potter-Roemer Figure 5866.

2.4 FLOWMETER SYSTEMS

A. Manufacturers: Subject to compliance with requirements, provide products by one of the following:
1. Gerand Engineering Co.
2. Hydro Flow Products, Inc.
3. Reddy-Buffaloes Pump Company.
4. Victaulic Company.

B. Description: UL-listed or FM-Approved, fire-pump flowmeter system with capability to indicate flow to not less than 175 percent of fire-pump rated capacity.

C. Pressure Rating: 175 psig (1200 kPa) minimum.

D. Sensor: Annubar probe, orifice plate, or venturi unless otherwise indicated. Sensor size shall match pipe, tubing, flowmeter, and fittings.

E. Permanently Mounted Flowmeter: Compatible with flow sensor; with dial not less than 4-1/2 inches (115 mm) in diameter. Include bracket or device for wall mounting.

1. Tubing Package: NPS 1/8 or NPS 1/4 (DN 6 or DN 10) soft copper tubing with copper or brass fittings and valves.

F. Portable Flowmeter: Compatible with flow sensor; with dial not less than 4-1/2 inches (115 mm) in diameter and with two 12-foot- (3.7-m-) long hoses in carrying case.

2.5 GROUT

A. Standard: ASTM C 1107, Grade B, post-hardening and volume-adjusting, dry, hydraulic-cement grout.

B. Characteristics: Nonshrink and recommended for interior and exterior applications.

C. Design Mix: 5000-psi (34-MPa), 28-day compressive strength.

D. Packaging: Premixed and factory packaged.

2.6 SOURCE QUALITY CONTROL

A. Testing: Test and inspect fire pumps according to UL 448 requirements for "Operation Test" and "Manufacturing and Production Tests."

1. Verification of Performance: Rate fire pumps according to UL 448.

B. Fire pumps will be considered defective if they do not pass tests and inspections.

C. Prepare test and inspection reports.

PART 3 - EXECUTION

3.1 EXAMINATION

A. Examine equipment bases and anchorage provisions, with Installer present, for compliance with requirements and for conditions affecting performance of fire pumps.

B. Examine roughing-in for fire-suppression piping systems to verify actual locations of piping connections before fire-pump installation.

C. Proceed with installation only after unsatisfactory conditions have been corrected.

3.2 INSTALLATION

A. Fire-Pump Installation Standard: Comply with NFPA 20 for installation of fire pumps, relief valves, and related components.

B. Equipment Mounting:

1. Install fire pump (package) on cast-in-place concrete equipment base. Comply with requirements for equipment bases and foundations specified in **Section 033100 "Concrete Work".**
2. Comply with requirements for vibration isolation and seismic control devices specified in Section 210548 "Vibration and Seismic Controls for Fire-Suppression Piping and Equipment."
3. Comply with requirements for vibration isolation devices specified in Section 210548"Vibration Controls for Fire-Suppression Piping and Equipment."

C. Install fire-pump suction and discharge piping equal to or larger than sizes required by NFPA 20. Install the underground suction pipe from tank sized as indicated on the drawing or larger.

D. Support piping and pumps separately so weight of piping does not rest on pumps.

E. Install valves that are same size as connecting piping. Comply with requirements for fire-protection valves specified in Section 211313 "Wet-Pipe Sprinkler Systems."

F. Install pressure gages on fire-pump suction and discharge flange pressure-gage tappings. Comply with requirements for pressure gages specified in Section 211313 "Wet-Pipe Sprinkler Systems."

G. Install piping hangers and supports, anchors, valves, gages, and equipment supports according to NFPA 20.

H. Install flowmeters and sensors. Install flowmeter-system components and make connections according to NFPA 20 and manufacturer's written instructions. Pipe flowmeter discharge back to fire suppression water storage tank.

I. Install test header, test gates, and related piping.

J. Electrical Wiring: Install electrical devices furnished by equipment manufacturers but not factory mounted. Furnish copies of manufacturers' wiring diagram submittals to electrical Installer.

K. Wiring Method: Conceal conductors and cables in accessible ceilings, walls, and floors where possible.

3.3 ALIGNMENT

A. Coordinate alignment of pipe rough-ins and fire pump package installation to minimize disturbance to flow and floor space utilized.

3.4 CONNECTIONS

A. Comply with requirements for piping and valves specified in Section 211313 "Wet-Pipe Sprinkler Systems." Drawings indicate general arrangement of piping, fittings, and specialties.

B. Install piping adjacent to pumps and equipment to allow service and maintenance.

C. Connect flowmeter-system meters, sensors, and valves to tubing.

D. Connect fire pumps pumps to their controllers.

3.5 IDENTIFICATION

A. Identify system components. Comply with requirements for fire-pump marking according to NFPA 20.

3.6 FIELD QUALITY CONTROL

A. Test each fire pump with its controller as a unit. Comply with requirements for electric-motor-driver fire-pump controllers specified in Section 213900 "Controllers for Fire-Pump Drivers."

B. Manufacturer's Field Service: Engage a factory-authorized service representative to inspect, test, and adjust components, assemblies, and equipment installations, including connections.

C. Perform tests and inspections.

1. Manufacturer's Field Service: Engage a factory-authorized service representative to inspect components, assemblies, and equipment installations, including connections, and to assist in testing.

D. Tests and Inspections:

1. After installing components, assemblies, and equipment including controller, test for compliance with requirements.
2. Test according to NFPA 20 for acceptance and performance testing.
3. Leak Test: After installation, charge system and test for leaks. Repair leaks and retest until no leaks exist.
4. Operational Test: After electrical circuitry has been energized, start units to confirm proper motor rotation and unit operation.
5. Test and adjust controls and safeties. Replace damaged and malfunctioning controls and equipment.

E. Components, assemblies, and equipment will be considered defective if they do not pass tests and inspections.

F. Prepare test and inspection reports.

G. Furnish fire hoses in number, size, and length required to reach storm drain or other acceptable location to dispose of fire-pump test water. Hoses are for tests only and do not convey to Owner.

3.7 STARTUP SERVICE

A. Engage a factory-authorized service representative to perform startup service.

1. Complete installation and startup checks according to manufacturer's written instructions.

3.8 DEMONSTRATION

A. Engage a factory-authorized service representative to train Owner's maintenance personnel or Owner-designated sprinkler maintenance service company to adjust, operate, and maintain fire pumps.

END OF SECTION 231113

SECTION 213400 – PRESSURE-MAINTENANCE PUMPS

PART 1 - GENERAL

1.1 RELATED DOCUMENTS

A. Drawings and general provisions of the Contract, including General and Supplementary Conditions and Division 01 Specification Sections, apply to this Section.

1.2 SUMMARY

A. Section Includes:

1.Multistage, pressure-maintenance pumps.

B. The intent is that a factory-piped compact fire pump package, including fire pump, jockey pump and prepiped jockey pipe leg, fire pump controller with automatic transfer switch, jockey pump controller, inlet piping with supervised control valve, outlet piping with relief and check valves, outlet test header tee with supervised control valve, and discharge supervised control valve, all installed on a steel skid, be provided. Performance criteria is cited in this and other Division 21 Sections for various individual components of the packaged system.

C. Related Section:

1. Section 213900 "Controllers for Fire-Pump Drivers" for pressure-maintenance-pump controllers.

1.3 PERFORMANCE REQUIREMENTS

A. Pump Equipment, Accessory, and Specialty Pressure Rating: 175 psig (1200 kPa) minimum unless higher pressure rating is indicated.

1.4 ACTION SUBMITTALS

A. Product Data: For each type of product indicated. Include rated capacities, operating characteristics, performance curves, electrical characteristics, and furnished specialties and accessories.

B. Shop Drawings: For pumps, accessories, and specialties. Include plans, elevations, sections, details, and attachments to other work.

1. Detail equipment assemblies and indicate dimensions, weights, loads, required clearances, method of field assembly, components, and location and size of each field connection.
2. Wiring Diagrams: For power, signal, and control wiring.

1.5 INFORMATIONAL SUBMITTALS

A. Field quality-control reports.

1.6 CLOSEOUT SUBMITTALS

A. Operation and Maintenance Data: For pumps to include in operation and maintenance manuals.

1.7 QUALITY ASSURANCE

A. Electrical Components, Devices, and Accessories: Listed and labeled as defined in NFPA 70, by a qualified testing agency, and marked for intended location and application.

1.8 COORDINATION

A. Coordinate sizes and locations of concrete bases with actual equipment provided.

PART 2 - PRODUCTS

2.1 MULTISTAGE, PRESSURE-MAINTENANCE PUMPS

A. Manufacturers: Subject to compliance with requirements, provide products by one of the following:

1. A-C Fire Pump Systems; a business of ITT Industries.
2. Grundfos Management A/S; Grundfos Pumps Corporation U.S.A.
3. PACO Pumps; Grundfos Pumps Corporation U.S.A.
4. Pentair Pump Group, Aurora Pump
5. Basis of Design: Aurora Model PVM2, SIZE 50

B. Description: Factory-assembled and -tested, multistage, barrel-type vertical pump as defined in HI 2.1-2.2 and HI 2.3; designed for surface installation with pump and motor direct coupled and mounted vertically.

C. Pump Construction:

1. Barrel: Stainless steel.
2. Suction and Discharge Chamber: Cast iron with flanged inlet and outlet.
3. Pump Head/Motor Mount: Cast iron.
4. Impellers: Stainless steel, balanced, and keyed to shaft.
5. Pump Shaft: Stainless steel.
6. Seal: Mechanical type with carbon rotating face and silicon-carbide stationary seat.
7. Intermediate Chamber Bearings: Aluminum-oxide ceramic or bronze.
8. Chamber-Base Bearing: Tungsten carbide.
9. O-Rings: EPDM or NBR.

D. Motor: Single speed with permanently lubricated ball bearings and rigidly mounted to pump head. Comply with requirements in Section 210513 "Common Motor Requirements for Fire Suppression Equipment."

E. Nameplate: Permanently attached to pump and indicating capacity and characteristics.

F. Capacities and Characteristics:

1. Rated Capacity: 5 gpm.
2. Total Dynamic Head: 85 psig.
3. Working Pressure: 175-psig (1200 kPa) minimum.
4. Inlet and Outlet Size: NPS 1-1/4 (DN 32).
5. Discharge and Suction Flanges: Class 250.
6. Suction Head Available at Pump: 2 feet.
7. Motor Horsepower: 1.5.
8. Motor Speed: 3600 rpm.
9. Electrical Characteristics:

   a. Volts: 208.
   b. Phases: Three.
   c. Hertz: 60.
   d. Full-Load Amperes: 5.75.
   e. Minimum Circuit Ampacity: 6.4.
   f. Maximum Overcurrent Protection: 20 amps.

10. Pump-Start, Pressure-Switch Setting: 74 psig.
11. Pump-Stop, Pressure-Switch Setting: 84 psig.

2.2 MOTORS

A. Comply with NEMA designation, temperature rating, service factor, enclosure type, and efficiency requirements for motors specified in Section 210513 "Common Motor Requirements for Fire Suppression Equipment."

1. Motor Sizes: Minimum size as indicated; if not indicated, large enough so driven load will not require motor to operate in service factor range above 1.0.

PART 3 - EXECUTION

3.1 EQUIPMENT INSTALLATION

A. NFPA Standard: Comply with NFPA 20 for installation of pressure-maintenance pumps.

B. Base-Mounted Pump Mounting: Install pump (package) on concrete base. Comply with requirements for concrete bases specified in **Section 033100 "Concrete Work."**

1. Install dowel rods to connect concrete base to concrete floor. Unless otherwise indicated, install dowel rods on 18-inch (450-mm) centers around the full perimeter of concrete base.

2. For supported equipment, install epoxy-coated anchor bolts that extend through concrete base and anchor into structural concrete floor.
3. Place and secure anchorage devices. Use setting drawings, templates, diagrams, instructions, and directions furnished with items to be embedded.
4. Install anchor bolts to elevations required for proper attachment to supported equipment.
5. Attach pumps to equipment base using anchor bolts.

C. Install multistage, pressure-maintenance pumps according to HI 1.4.

3.2 FIELD QUALITY CONTROL

A. Manufacturer's Field Service: Engage a factory-authorized service representative to inspect, test, and adjust components, assemblies, and equipment installations, including connections.

B. Perform tests and inspections.

1. Manufacturer's Field Service: Engage a factory-authorized service representative to inspect components, assemblies, and equipment installations, including connections, and to assist in testing.

C. Tests and Inspections:

1. Operational Test: After electrical circuitry has been energized, start units to confirm proper motor rotation and unit operation.
2. Test and adjust controls and safeties. Replace damaged and malfunctioning controls and equipment.

D. Pressure-maintenance pumps will be considered defective if they do not pass tests and inspections.

E. Prepare test and inspection reports.

3.3 ADJUSTING

A. Lubricate pumps as recommended by manufacturer.

B. Set field-adjustable pressure-switch ranges as indicated.

END OF SECTION 213400

SECTION 213900 – CONTROLLERS FOR FIRE-PUMP DRIVERS

PART 1 - GENERAL

1.1 RELATED DOCUMENTS

A. Drawings and general provisions of the Contract, including General and Supplementary Conditions and Division 01 Specification Sections, apply to this Section.

1.2 SUMMARY

A. Section Includes:

1. Full-service, reduced-voltage controllers rated 600 V and less, with integral automatic transfer switch.
2. Controllers for pressure-maintenance pumps.

B. The intent is that a factory-piped compact fire pump package, including fire pump, jockey pump (pressure maintenance pump) and prepiped jockey pump pipe leg, fire pump controller with automatic transfer switch, jockey pump controller, inlet piping with supervised control valve, outlet piping with relief and check valves, outlet test header tee with supervised control valve, and discharge supervised control valve, all installed on a steel skid, be provided. Performance criteria is cited in this and other Division 21 Sections for various individual components of the packaged system.

1.3 DEFINITIONS

A. ATS: Automatic transfer switch(es).

B. ECM: Electronic control module.

C. MCCB: Molded-case circuit breaker.

D. N.O.: Normally open.

1.4 PERFORMANCE REQUIREMENTS

A. Seismic Performance: Fire-pump controllers and alarm panels shall withstand the effects of earthquake motions determined according to State of Connecticut Building Code.

1. The term "withstand" means "the unit will remain in place without separation of any parts from the device when subjected to the seismic forces specified”.

1.5 ACTION SUBMITTALS

A. Product Data: For each type of product indicated. Include rated capacities, operating characteristics, electrical characteristics, and furnished specialties and accessories**.**

B. Shop Drawings: For each type of product indicated. Include dimensioned plans, elevations, sections, details, and attachments to other work, including required clearances and service spaces around controller enclosures.

1. Show tabulations of the following:

   a. Each installed unit's type and details.
   b. Enclosure types and details for types other than NEMA 250, Type 2.
   c. Factory-installed devices.
   d. Nameplate legends.
   e. Short-circuit current (withstand) rating of integrated unit.
   f. Features, characteristics, ratings, and factory settings of individual overcurrent protective devices.
   g. Specified modifications.

2. Detail equipment assemblies and indicate dimensions, weights, loads, method of field assembly, components, and location and size of each field connection.
3. Schematic and Connection Diagrams: For power, signal, alarm, and control wiring and for pressure-sensing tubing.

1.6 INFORMATIONAL SUBMITTALS

A. Qualification Data: For qualified testing agency.

B. Seismic Qualification Certificates: For each type of product indicated, from manufacturer.

1. Basis for Certification: Indicate whether withstand certification is based on actual test of assembled components or on calculation.
2. Dimensioned Outline Drawings of Equipment Unit: Identify center of gravity and locate and describe mounting and anchorage provisions.
3. Detailed description of equipment anchorage devices on which the certification is based and their installation requirements.

C. Product Certificates: For each type of product indicated, from manufacturer.

D. Manufacturer's factory test reports of fully assembled and tested equipment.

E. Source quality-control reports.

F. Field quality-control reports.

1.7 CLOSEOUT SUBMITTALS

A. Operation and Maintenance Data: For each type of product indicated to include in emergency, operation, and maintenance manuals. In addition to items specified in Section 017823 "Operation and Maintenance Data," include the following:

1. Manufacturer's written instructions for setting field-adjustable timers, controls, and status and alarm points.
2. Manufacturer's written instructions for testing, adjusting, and reprogramming microprocessor-based logic controls.

1.8 MAINTENANCE MATERIAL SUBMITTALS

A. Furnish extra materials that match products installed and that are packaged with protective covering for storage and identified with labels describing contents.

1. Indicating Lights: **Two** of each type and color of lens installed; **two** of each type and size of lamp installed.
2. Auxiliary Contacts: **One** for each size and type of magnetic contactor installed.
3. Power Contacts: **Three** for each size and type of magnetic contactor installed.
4. Contactor Coils: **One** for each size and type of magnetic controller installed.
5. Relay Boards: **One** for each size and type of relay board installed.
6. Operator Interface: **One** microprocessor board(s), complete with display and keypad.

1.9 QUALITY ASSURANCE

A. Testing Agency Qualifications: Member company of an NRTL.

B. Source Limitations: Obtain fire-pump controllers and all associated equipment from single source or producer.

C. Electrical Components, Devices, and Accessories: Listed and labeled as defined in NFPA 70, by a qualified testing agency, and marked for intended location and application.

D. Comply with standards of authorities having jurisdiction pertaining to materials and installation.

E. Comply with NFPA 20 and NFPA 70.

F. IEEE Compliance: Fabricate and test enclosed controllers according to IEEE 344 to withstand seismic forces defined in Section 260548.16 "Seismic Controls for Electrical Systems."

1.10 DELIVERY, STORAGE, AND HANDLING

A. Store controllers indoors in clean, dry space with uniform temperature to prevent condensation. Protect enclosed controllers from exposure to dirt, fumes, water, corrosive substances, and physical damage.

B. If stored in areas subject to weather, protect controllers from weather, dirt, dust, corrosive substances, and physical damage. Remove loose packing and flammable materials from inside controllers; install temporary electric heating, with at least 250 W per controller.

1.11 PROJECT CONDITIONS

A. Environmental Limitations:

1. Ambient Temperature Rating: Not less than 40 deg F (5 deg C) and not exceeding 122 deg F (50 deg C) unless otherwise indicated.
2. Altitude Rating: Not exceeding 6600 feet (2010 m) unless otherwise indicated.

B. Interruption of Existing Electric Service: Notify Construction Manager no fewer than seven days in advance of proposed interruption of electric service, and comply with NFPA 70E.

1.12 COORDINATION

A. Coordinate layout and installation of controllers with other construction including conduit, piping, fire-pump equipment, and adjacent surfaces. Maintain required clearances for workspace and equipment access doors and panels. Ensure that controllers are within sight of fire-pump drivers.

B. Coordinate sizes and locations of concrete bases with actual equipment provided.

PART 2 - PRODUCTS

2.1 FULL-SERVICE CONTROLLERS

A. Manufacturers: Subject to compliance with requirements, provide products by one of the following:
1. Eaton Electrical Inc.; Cutler-Hammer Business Unit.
2. Hubbell Incorporated; Metron Division.
3. Tornatech.
4. Basis of Design: Metron Series MP435

B. General Requirements for Full-Service Controllers:

1. Comply with NFPA 20 and UL 218.
2. Listed by an NRTL for electric-motor driver for fire-pump service.
3. Combined automatic and nonautomatic operation.
4. Factory assembled, wired, and tested; continuous-duty rated.
5. Service Equipment Label: NRTL labeled for use as service equipment.

C. Method of Starting:

1. Pressure-switch actuated.

a. Water-pressure-actuated switch and pressure transducer with independent high- and low-calibrated adjustments responsive to water pressure in fire-suppression piping.
b. System pressure recorder, electric ac driven, with spring backup.
c. Programmable minimum-run-time relay to prevent short cycling.
d. Programmable timer for weekly tests.

2. Magnetic Controller: Wye-delta (closed transition**)** type.
3. Emergency Start: Mechanically operated start handle that closes and retains the motor RUN contactor independent of all electric or pressure actuators.

D. Method of Stopping: Automatic and nonautomatic shutdown after automatic starting.

E. Capacity: Rated for fire-pump-driver horsepower and short-circuit-current (withstand) rating equal to or greater than short-circuit current available at controller location.

F. Method of Isolation and Overcurrent Protection: Interlocked isolating switch and nonthermal MCCB; with a common, externally mounted operating handle, and providing locked-rotor protection.

G. Door-Mounted Operator Interface and Controls:

1. Monitor, display, and control the devices, alarms, functions, and operations listed in NFPA 20 as required for drivers and controller types used.
2. Method of Control and Indication:

a. Microprocessor-based logic controller, with multiline digital readout.
b. Operator Interface Device with Pushbutton navigation.
c. LED alarm and status indicating lights.

3. Local Alarm and Status Indications:

a. Controller power on.
b. Motor running condition.
c. Loss-of-line power.
d. Line-power phase reversal.
e. Line-power single-phase condition.

4. Remote Alarm and Status Indications (provide alarm contacts for remote alarming through building fire alarm system):
a. Motor running condition.
b. Loss-of-phase.
c. Phase reversal.
d. Controller connected to alternate power source.

5. Audible alarm, with silence push button.
6. Nonautomatic START and STOP push buttons or switches.

H. Optional Features:

1. Extra Output Contacts for remote alarming via Building Fire Alarm System, if not furnished standard with controller):

    a. One set of N.O. contact(s) for motor running condition.
    b. One set(s) of contacts for loss-of-phase.
    c. One set of contacts for phase reversal.
    d. One set of contacts for controller connected to alternate power source.

2. Local alarm bell.
3. Door-mounted thermal or impact printer for alarm and status logs.
4. Operator Interface Communications Ports: USB, Ethernet, and RS485.

I. ATS:

1. Complies with NFPA 20, UL 218 and UL 1008.
2. Integral with controller as a listed combination fire-pump controller and power transfer switch.
3. Automatically transfers fire-pump controller from normal power supply to alternate power supply in event of power failure.
4. Allows manual transfer from one source to the other.
5. Alternate-Source Isolating and Disconnecting Means: Mechanically interlocked isolation switch and circuit breaker rated at a minimum of 115 percent of rated motor full-load current, with an externally mounted operating handle; circuit breaker shall be provided with nonthermal sensing, instantaneous-only short-circuit overcurrent protection to comply with available fault currents.
6. Local Alarm and Status Indications:

    a. Normal source available.
    b. Alternate source available.
    c. In normal position.
    d. In alternate position.
    e. Isolating means open.

7. Audible alarm, with silence push button.
8. Nonautomatic (manual, nonelectric) means of transfer.
9. Engine test push button.
10. Start generator output contacts.
11. Timer for weekly generator tests.

2.2 CONTROLLERS FOR PRESSURE-MAINTENANCE PUMPS

A. Manufacturers: Subject to compliance with requirements, provide products by one of the following:
    1. Eaton Electrical Inc.; Cutler-Hammer Business Unit.
    2. Hubbell Incorporated; Hubbell Industrial Controls, Metron.
    3. Tornatech.
    4. Basis of Design: Metron M15A

B. General Requirements for Pressure-Maintenance-Pump Controllers:

1. Type: UL 508 factory assembled, -wired, and tested, across-the-line; for combined automatic and manual operation.
2. Enclosure: UL 508 and NEMA 250, Type 3R for wall-mounting.
3. Factory assembled, wired, and tested.
4. Finish: Manufacturer's standard color paint.

C. Rate controller for scheduled horsepower and include the following:

1. Fusible disconnect switch.
2. Pressure switch.
3. Hand-off-auto selector switch.
4. Pilot light.
5. Running period timer.

2.3 ENCLOSURES

A. Fire-Pump Controllers and Jockey Pump Controllers: NEMA 250, to comply with environmental conditions at installed locations and NFPA 20.

1. Indoor Mechanical Room (subject to Dust, Dripping Non-Corrosive Liquids): Type 3R (IEC IP56).

B. Enclosure Color: Manufacturer's standard "fire-pump-controller red".

C. Nameplates: Comply with NFPA 20; complete with capacity, characteristics, approvals, listings, and other pertinent data.

2.4 SOURCE QUALITY CONTROL

A. Testing: Test and inspect fire-pump controllers according to requirements in NFPA 20, UL 218 and the Authority Having Jurisdiction.

1. Verification of Performance: Rate controllers according to operation of functions and features specified.

B. Fire-pump controllers will be considered defective if they do not pass tests and inspections.

C. Prepare test and inspection reports.

PART 3 - EXECUTION

3.1 EXAMINATION

A. Examine areas and surfaces to receive equipment, with Installer present, for compliance with requirements and other conditions affecting performance.

B. Examine equipment before installation. Reject equipment that is wet or damaged by moisture or mold.

C. Proceed with installation only after unsatisfactory conditions have been corrected.

3.2 CONTROLLER INSTALLATION

A. Install controllers within sight of their respective drivers.

B. Connect controllers to their dedicated pressure-sensing lines.

C. Wall-Mounting Controllers: Install controllers on walls with disconnect operating handles not higher than 79 inches (2006 mm) above finished floor, and bottom of enclosure not less than 12 inches (305 mm) above finished floor unless otherwise indicated. Bolt units to wall or mount on lightweight structural-steel channels bolted to wall. For controllers not on walls, provide freestanding racks complying with Section 260529 "Hangers and Supports for Electrical Systems."

D. Floor-Mounting Controllers: Install controllers on 4-inch (100-mm) nominal-thickness concrete bases, using floor stands high enough so that the bottom of enclosure cabinet is not less than 12 inches (305 mm) above finished floor. Comply with requirements for concrete bases specified in **Section 033100 "Concrete Work".**

1. Install dowel rods to connect concrete base to concrete floor. Unless otherwise indicated, install dowel rods on 18-inch (450-mm) centers around the full perimeter of concrete base.
2. For supported equipment, install epoxy-coated anchor bolts that extend through concrete base, and anchor into structural concrete floor.
3. Place and secure anchorage devices. Use setting drawings, templates, diagrams, instructions, and directions furnished with items to be embedded.
4. Install anchor bolts to elevations required for proper attachment to supported equipment.

E. Seismic Bracing: Comply with requirements specified in Section 260548 "Seismic Controls for Electrical Systems."

F. Temporary Lifting Provisions: Remove temporary lifting eyes, channels, and brackets and temporary blocking of moving parts from enclosures and components.

G. Comply with NEMA ICS 15.

3.3 POWER WIRING INSTALLATION

A. Install power wiring between controllers and their services or sources, and between controllers and their drivers. Comply with requirements in NFPA 20, NFPA 70, and Section 260519 "Low-Voltage Electrical Power Conductors and Cables."

3.4 CONTROL AND ALARM WIRING INSTALLATION

A. Install wiring between controllers and remote devices and facility's central monitoring system. Comply with requirements in NFPA 20, NFPA 70, and Section 260523 "Control-Voltage Electrical Power Cables."

B. Install wiring between controllers and the building's fire-alarm system. Comply with requirements specified in Section 283111 "Digital, Addressable Fire-Alarm System."

C. Bundle, train, and support wiring in enclosures.

D. Connect remote manual and automatic activation devices where applicable.

3.5 IDENTIFICATION

A. Comply with requirements in NFPA 20 for marking fire-pump controllers.

B. Identify system components, wiring, cabling, and terminals. Comply with requirements for identification in NFPA 20 and as specified in Section 260553 "Identification for Electrical Systems."

3.6 FIELD QUALITY CONTROL

A. Testing Agency: Engage a qualified testing agency to perform tests and inspections.

B. Manufacturer's Field Service: Engage a factory-authorized service representative to inspect, test, and adjust components, assemblies, and equipment installations, including connections.

C. Perform tests and inspections.

1. Manufacturer's Field Service: Engage a factory-authorized service representative to inspect components, assemblies, and equipment installations, including connections, and to assist in testing.

D. Acceptance Testing Preparation:

1. Inspect and Test Each Component:

a. Inspect wiring, components, connections, and equipment installations. Test and adjust components and equipment.
b. Test insulation resistance for each element, component, connecting supply, feeder, and control circuits.
c. Test continuity of each circuit.

2. Verify and Test Each Electric-Driver Controller:

a. Verify that voltages at controller locations are within plus 10 or minus 1 percent of motor nameplate rated voltages, with motors off. If outside this range for any motor, notify Construction Manager before starting the motor(s).
b. Test each motor for proper phase rotation.

3. Operational Test: After electrical circuitry has been energized, start units to confirm proper unit operation.
4. Test and adjust controls and safeties. Replace damaged and malfunctioning controls and equipment.

E. Field Acceptance Tests:

1. Do not begin field acceptance testing until suction piping has been flushed and hydrostatically tested and the certificate for flushing and testing has been submitted to Architect, Construction Manager and authorities having jurisdiction.
2. Prior to starting, notify authorities having jurisdiction of the time and place of the acceptance testing.
3. Engage manufacturer's factory-authorized service representative to be present during the testing.
4. Perform field acceptance tests as outlined in NFPA 20.

F. Controllers will be considered defective if they do not pass tests and inspections.

G. Prepare test and inspection reports.

3.7 STARTUP SERVICE

A. Engage a factory-authorized service representative to perform startup service.

1. Complete installation and startup checks according to manufacturer's written instructions.

3.8 ADJUSTING

A. Adjust controllers to function smoothly and as recommended by manufacturer.

B. Set field-adjustable switches, auxiliary relays, time-delay relays, and timers.

C. Program microprocessors for required operational sequences, status indications, alarms, event recording, and display features. Clear events memory after final acceptance testing and prior to Substantial Completion.

D. Set field-adjustable pressure switches.

3.9 PROTECTION

A. Temporary Heating: Apply temporary heat to maintain temperature according to manufacturer's written instructions until enclosed controllers are ready to be energized and placed into service.

B. Replace controllers whose interiors have been exposed to water or other liquids prior to Substantial Completion.

3.10 DEMONSTRATION

A. Engage a factory-authorized service representative to train Owner's maintenance personnel or Owner-selected sprinkler system service company personnel to adjust, operate, and maintain controllers and to use and reprogram microprocessor-based controls within this equipment.

END OF SECTION 213900

SECTION 220500 - COMMON WORK RESULTS FOR PLUMBING

PART 1 - GENERAL

1.1 RELATED DOCUMENTS

A. Drawings and general provisions of the Contract, including General and Supplementary Conditions and Division 01 Specification Sections, apply to this Section.

1.2 SUMMARY

A. This Section includes the following:

1. Piping materials and installation instructions common to most piping systems.
2. Transition fittings.
3. Dielectric fittings.
4. Mechanical sleeve seals.
5. Sleeves.
6. Escutcheons.
7. Grout.
8. Plumbing demolition.
9. Equipment installation requirements common to equipment sections.
10. Painting and finishing.
11. Concrete bases.
12. Supports and anchorages.

1.3 DEFINITIONS

A. Finished Spaces: Spaces other than mechanical and electrical equipment rooms, furred spaces, pipe chases, unheated spaces immediately below roof, spaces above ceilings, unexcavated spaces, crawlspaces, and tunnels.

B. Exposed, Interior Installations: Exposed to view indoors. Examples include finished occupied spaces and mechanical equipment rooms.

C. Exposed, Exterior Installations: Exposed to view outdoors or subject to outdoor ambient temperatures and weather conditions. Examples include rooftop locations.

D. Concealed, Interior Installations: Concealed from view and protected from physical contact by building occupants. Examples include above ceilings and in chases.

E. Concealed, Exterior Installations: Concealed from view and protected from weather conditions and physical contact by building occupants but subject to outdoor ambient temperatures. Examples include installations within unheated shelters.

F. The following are industry abbreviations for plastic materials:

1. ABS: Acrylonitrile-butadiene-styrene plastic.
2. CPVC: Chlorinated polyvinyl chloride plastic.
3. PE: Polyethylene plastic.

4. PVC: Polyvinyl chloride plastic.

G. The following are industry abbreviations for rubber materials:

1. EPDM: Ethylene-propylene-diene terpolymer rubber.
2. NBR: Acrylonitrile-butadiene rubber.

1.4 SUBMITTALS

A. Product Data: For the following:

1. Transition fittings.
2. Dielectric fittings.
3. Mechanical sleeve seals.
4. Escutcheons.

B. Welding certificates.

1.5 QUALITY ASSURANCE

A. Steel Support Welding: Qualify processes and operators according to AWS D1.1, "Structural Welding Code--Steel."

B. Steel Pipe Welding: Qualify processes and operators according to ASME Boiler and Pressure Vessel Code: Section IX, "Welding and Brazing Qualifications."

1. Comply with provisions in ASME B31 Series, "Code for Pressure Piping."
2. Certify that each welder has passed AWS qualification tests for welding processes involved and that certification is current.

C. Electrical Characteristics for Plumbing Equipment: Equipment of higher electrical characteristics may be furnished provided such proposed equipment is approved in writing and connecting electrical services, circuit breakers, and conduit sizes are appropriately modified. If minimum energy ratings or efficiencies are specified, equipment shall comply with requirements.

1.6 DELIVERY, STORAGE, AND HANDLING

A. Deliver pipes and tubes with factory-applied end caps. Maintain end caps through shipping, storage, and handling to prevent pipe end damage and to prevent entrance of dirt, debris, and moisture.

B. Store plastic pipes protected from direct sunlight. Support to prevent sagging and bending.

1.7 COORDINATION

A. Arrange for pipe spaces, chases, slots, and openings in building structure during progress of construction, to allow for plumbing installations.

B. Coordinate installation of required supporting devices and set sleeves in poured-in-place concrete and other structural components as they are constructed.

C. Coordinate requirements for access panels and doors for plumbing items requiring access that are concealed behind finished surfaces. Access panels and doors are specified in Section 083113 "Access Doors and Frames."

PART 2 - PRODUCTS

2.1 MANUFACTURERS

A. In other Part 2 articles where subparagraph titles below introduce lists, the following requirements apply for product selection:

1. Available Manufacturers: Subject to compliance with requirements, manufacturers offering products that may be incorporated into the Work include, but are not limited to, the manufacturers specified.

2.2 PIPE, TUBE, AND FITTINGS

A. Refer to individual Division 22 piping Sections for pipe, tube, and fitting materials and joining methods.

B. Pipe Threads: ASME B1.20.1 for factory-threaded pipe and pipe fittings.

2.3 JOINING MATERIALS

A. Refer to individual Division 22 piping Sections for special joining materials not listed below.

B. Pipe-Flange Gasket Materials: Suitable for chemical and thermal conditions of piping system contents.

1. ASME B16.21, nonmetallic, flat, asbestos-free, 1/8-inch maximum thickness unless thickness or specific material is indicated.

   a. Full-Face Type: For flat-face, Class 125, cast-iron and cast-bronze flanges.
   b. Narrow-Face Type: For raised-face, Class 250, cast-iron and steel flanges.

2. AWWA C110, rubber, flat face, 1/8 inch thick, unless otherwise indicated; and full-face or ring type, unless otherwise indicated.

C. Flange Bolts and Nuts: ASME B18.2.1, carbon steel, unless otherwise indicated.

D. Plastic, Pipe-Flange Gasket, Bolts, and Nuts: Type and material recommended by piping system manufacturer, unless otherwise indicated.

E. Solder Filler Metals: ASTM B 32, lead-free alloys. Include water-flushable flux according to ASTM B 813.

F. Brazing Filler Metals: AWS A5.8, BCuP Series, copper-phosphorus alloys for general-duty brazing, unless otherwise indicated; and AWS A5.8, BAg1, silver alloy for refrigerant piping, unless otherwise indicated.

G. Welding Filler Metals: Comply with AWS D10.12 for welding materials appropriate for wall thickness and chemical analysis of steel pipe being welded.

H. Solvent Cements for Joining Plastic Piping:

1. ABS Piping: ASTM D 2235.
2. CPVC Piping: ASTM F 493.
3. PVC Piping: ASTM D 2564. Include primer according to ASTM F 656.
4. PVC to ABS Piping Transition: ASTM D 3138.

2.4 TRANSITION FITTINGS

A. AWWA Transition Couplings: Same size as, and with pressure rating at least equal to and with ends compatible with, piping to be joined.

1. Available Manufacturers:

a. Cascade Waterworks Mfg. Co.
b. Dresser Industries, Inc.; DMD Div.
c. Ford Meter Box Company, Incorporated (The); Pipe Products Div.
d. JCM Industries
e. Smith-Blair, Inc.

2. Underground Piping NPS 1-1/2 (DN 40) and Smaller: Manufactured fitting or coupling.
3. Underground Piping NPS 2 (DN 50) and Larger: AWWA C219, metal sleeve-type coupling.
4. Aboveground Pressure Piping: Pipe fitting.

B. Plastic-to-Metal Transition Fittings: CPVC and PVC one-piece fitting with manufacturer's Schedule 80 equivalent dimensions; one (1) end with threaded brass insert, and one (1) solvent-cement-joint end.

1. Available Manufacturers:

a. Eslon Thermoplastics

C. Plastic-to-Metal Transition Adaptors: One-piece fitting with manufacturer's SDR 11 equivalent dimensions; one (1) end with threaded brass insert, and one (1) solvent-cement-joint end.

1. Available Manufacturers:

a. Thompson Plastics, Inc.

D. Plastic-to-Metal Transition Unions: MSS SP-107, CPVC and PVC four-part union. Include brass end, solvent-cement-joint end, rubber O-ring, and union nut.

1. Available Manufacturers:

a. NIBCO INC.
b. NIBCO, Inc.; Chemtrol Div.

E. Flexible Transition Couplings for Underground Nonpressure Drainage Piping: ASTM C 1173 with elastomeric sleeve, ends same size as piping to be joined, and corrosion-resistant metal band on each end.

1. Available Manufacturers:

a. Cascade Waterworks Mfg. Co.
b. Fernco, Inc.
c. Mission Rubber Company
d. Plastic Oddities, Inc.

2.5 DIELECTRIC FITTINGS

A. Description: Combination fitting of copper alloy and ferrous materials with threaded, solder-joint, plain, or weld-neck end connections that match piping system materials.

B. Insulating Material: Suitable for system fluid, pressure, and temperature.

C. Dielectric Unions: Factory-fabricated, union assembly, for 250-psig minimum working pressure at 180 deg F (82 deg C).

1. Available Manufacturers:

a. Capitol Manufacturing Co.
b. Central Plastics Company
c. Epco Sales, Inc.
d. Watts Industries, Inc.; Water Products Div.
e. Zurn Industries, Inc.; Wilkins Div.

D. Dielectric Flanges: Factory-fabricated, companion-flange assembly, for 150- or 300-psig minimum working pressure as required to suit system pressures.

1. Available Manufacturers:

a. Capitol Manufacturing Co.
b. Central Plastics Company
c. Epco Sales, Inc.
d. Watts Industries, Inc.; Water Products Div.

E. Dielectric-Flange Kits: Companion-flange assembly for field assembly. Include flanges, full-face- or ring-type neoprene or phenolic gasket, phenolic or polyethylene bolt sleeves, phenolic washers, and steel backing washers.

1. Available Manufacturers:

a. Advance Products & Systems, Inc.
b. Calpico, Inc.
c. Central Plastics Company
d. Pipeline Seal and Insulator, Inc.

2. Separate companion flanges and steel bolts and nuts shall have 150- or 300-psig minimum working pressure where required to suit system pressures.

F. Dielectric Couplings: Galvanized-steel coupling with inert and noncorrosive, thermoplastic lining; threaded ends; and 300-psig minimum working pressure at 225 deg F (107 deg C).

1. Available Manufacturers:

a. Calpico, Inc.
b. Lochinvar Corp.

G. Dielectric Nipples: Electroplated steel nipple with inert and noncorrosive, thermoplastic lining; plain, threaded, or grooved ends; and 300-psig minimum working pressure at 225 deg F (107 deg C).

1. Available Manufacturers:

a. Perfection Corp.
b. Precision Plumbing Products, Inc.
c. Sioux Chief Manufacturing Co., Inc.
d. Victaulic Co. of America

2.6 MECHANICAL SLEEVE SEALS

A. Description: Modular sealing element unit, designed for field assembly, to fill annular space between pipe and sleeve.

1. Available Manufacturers:

a. Advance Products & Systems, Inc.
b. Calpico, Inc.
c. Metraflex Co.
d. Pipeline Seal and Insulator, Inc.

2. Sealing Elements: EPDM interlocking links shaped to fit surface of pipe. Include type and number required for pipe material and size of pipe.
3. Pressure Plates: Stainless steel. Include two (2) for each sealing element.
4. Connecting Bolts and Nuts: Stainless steel of length required to secure pressure plates to sealing elements. Include one (1) for each sealing element.

2.7 SLEEVES

A. Galvanized-Steel Sheet: 0.0239-inch minimum thickness; round tube closed with welded longitudinal joint.

B. Steel Pipe: ASTM A 53, Type E, Grade B, Schedule 40, galvanized, plain ends.

C. Cast Iron: Cast or fabricated "wall pipe" equivalent to ductile-iron pressure pipe, with plain ends and integral waterstop, unless otherwise indicated.

D. Stack Sleeve Fittings: Manufactured, cast-iron sleeve with integral clamping flange. Include clamping ring and bolts and nuts for membrane flashing.

1. Underdeck Clamp: Clamping ring with set screws.

E. Molded PVC: Permanent, with nailing flange for attaching to wooden forms.

F. PVC Pipe: ASTM D 1785, Schedule 40.

G. Molded PE: Reusable, PE, tapered-cup shaped, and smooth-outer surface with nailing flange for attaching to wooden forms.

2.8 ESCUTCHEONS

A. Description: Manufactured wall and ceiling escutcheons and floor plates, with an ID to closely fit around pipe, tube, and insulation of insulated piping and an OD that completely covers opening.

B. One-Piece, Deep-Pattern Type: Deep-drawn, box-shaped brass with polished chrome-plated finish.

C. One-Piece, Cast-Brass Type: With set screw.

1. Finish: Polished chrome-plated

D. Split-Casting, Cast-Brass Type: With concealed hinge and set screw.

1. Finish: Polished chrome-plated.

E. One Piece, Stamped Steel Type: With set screw and chrome-plated finish.

F. One-Piece, Floor-Plate Type: Cast-iron floor plate.

G. Split-Casting, Floor-Plate Type: Cast brass with concealed hinge and set screw.

2.9 GROUT

A. Description: ASTM C 1107, Grade B, nonshrink and nonmetallic, dry hydraulic-cement grout.

1. Characteristics: Post-hardening, volume-adjusting, nonstaining, noncorrosive, nongaseous, and recommended for interior and exterior applications.
2. Design Mix: 5000-psi, twenty-eight (28) day compressive strength.
3. Packaging: Premixed and factory packaged.

PART 3 - EXECUTION

3.1 PLUMBING DEMOLITION

A. Refer to Section 017300 "Execution" and Section 024119 "Selective Demolition" for general demolition requirements and procedures.

B. Disconnect, demolish, and remove plumbing systems, equipment, and components indicated to be removed.

1. Piping to Be Removed: Remove portion of piping indicated to be removed and cap or plug remaining piping with same or compatible piping material. Do not leave dead-ends.
2. Piping to Be Abandoned in Place: Drain piping and cap or plug piping with same or compatible piping material.
3. Equipment to Be Removed: Disconnect and cap services and remove equipment.
4. Equipment to Be Removed and Salvaged: Disconnect and cap services and remove equipment and deliver to Owner.

3.2 PIPING SYSTEMS - COMMON REQUIREMENTS

A. Install piping according to the following requirements and Division 22 Sections specifying piping systems.

B. Drawing plans, schematics, and diagrams indicate general location and arrangement of piping systems. Indicated locations and arrangements were used to size pipe and calculate friction loss, expansion, pump sizing, and other design considerations. Install piping as indicated unless deviations to layout are approved on Coordination Drawings.

C. Install piping in concealed locations, unless otherwise indicated and except in equipment rooms and service areas.

D. Install piping indicated to be exposed and piping in equipment rooms and service areas at right angles or parallel to building walls. Diagonal runs are prohibited unless specifically indicated otherwise.

E. Install piping above accessible ceilings to allow sufficient space for ceiling panel removal.

F. Install piping to permit valve servicing.

G. Install piping at indicated slopes.

H. Install piping free of sags and bends.

I. Install fittings for changes in direction and branch connections.

J. Install piping to allow application of insulation.

K. Select system components with pressure rating equal to or greater than system operating pressure.

L. Install escutcheons for penetrations of walls, ceilings, and floors according to the following:

1. New Piping:

a. Piping with Fitting or Sleeve Protruding from Wall: One-piece, deep-pattern type.
b. Chrome-Plated Piping: One-piece, cast-brass type with polished chrome-plated finish.
c. Insulated Piping: One-piece, stamped-steel type with spring clips.
d. Bare Piping at Wall and Floor Penetrations in Finished Spaces: One-piece, cast-brass type with polished chrome-plated finish.

e. Bare Piping at Ceiling Penetrations in Finished Spaces: One-piece or split-casting, cast-brass type with polished chrome-plated finish.
f. Bare Piping in Unfinished Service Spaces: One-piece, cast-brass type with polished chrome-plated finish.
g. Bare Piping in Equipment Rooms: One-piece, cast-brass type.
h. Bare Piping at Floor Penetrations in Equipment Rooms: One-piece, floor-plate type.

M. Sleeves are not required for core-drilled holes.

N. Permanent sleeves are not required for holes formed by removable PE sleeves.

O. Install sleeves for pipes passing through concrete and masonry walls and concrete floor and roof slabs.

P. Install sleeves for pipes passing through concrete and masonry walls, gypsum-board partitions, and concrete floor and roof slabs.

1. Cut sleeves to length for mounting flush with both surfaces.

a. Exception: Extend sleeves installed in floors of mechanical equipment areas or other wet areas 2 inches above finished floor level. Extend cast-iron sleeve fittings below floor slab as required to secure clamping ring if ring is specified.

2. Install sleeves in new walls and slabs as new walls and slabs are constructed.
3. Install sleeves that are large enough to provide ¼-inch annular clear space between sleeve and pipe or pipe insulation. Use the following sleeve materials:

a. Steel Pipe Sleeves: For pipes smaller than NPS 6 (DN 150).
b. Steel Sheet Sleeves: For pipes NPS 6 (DN 150) and larger, penetrating gypsum-board partitions.
c. Stack Sleeve Fittings: For pipes penetrating floors with membrane waterproofing. Secure flashing between clamping flanges. Install section of cast-iron soil pipe to extend sleeve to 2 inches above finished floor level. Refer to Section 076200 "Sheet Metal Flashing and Trim" for flashing.

1) Seal space outside of sleeve fittings with grout.

4. Except for underground wall penetrations, seal annular space between sleeve and pipe or pipe insulation, using joint sealants appropriate for size, depth, and location of joint. Refer to Section 079200 "Joint Sealants" for materials and installation.

Q. Aboveground, Exterior-Wall Pipe Penetrations: Seal penetrations using sleeves and mechanical sleeve seals. Select sleeve size to allow for 1-inch annular clear space between pipe and sleeve for installing mechanical sleeve seals.

1. Install steel pipe for sleeves smaller than 6 inches in diameter.
2. Install cast-iron "wall pipes" for sleeves 6 inches and larger in diameter.
3. Mechanical Sleeve Seal Installation: Select type and number of sealing elements required for pipe material and size. Position pipe in center of sleeve. Assemble mechanical sleeve seals and install in annular space between pipe and sleeve. Tighten

bolts against pressure plates that cause sealing elements to expand and make watertight seal.

R. Underground, Exterior-Wall Pipe Penetrations: Install cast-iron "wall pipes" for sleeves. Seal pipe penetrations using mechanical sleeve seals. Select sleeve size to allow for 1-inch annular clear space between pipe and sleeve for installing mechanical sleeve seals.

1. Mechanical Sleeve Seal Installation: Select type and number of sealing elements required for pipe material and size. Position pipe in center of sleeve. Assemble mechanical sleeve seals and install in annular space between pipe and sleeve. Tighten bolts against pressure plates that cause sealing elements to expand and make watertight seal.

S. Fire-Barrier Penetrations: Maintain indicated fire rating of walls, partitions, ceilings, and floors at pipe penetrations. Seal pipe penetrations with firestop materials. Refer to Section 078413 "Penetration Firestopping" for materials.

T. Verify final equipment locations, dimensions and arrangements for roughing-in.

U. Refer to equipment specifications in other Sections of these Specifications for roughing-in requirements.

3.3 PIPING JOINT CONSTRUCTION

A. Join pipe and fittings according to the following requirements and Division 22 Sections specifying piping systems.

B. Ream ends of pipes and tubes and remove burrs. Bevel plain ends of steel pipe.

C. Remove scale, slag, dirt, and debris from inside and outside of pipe and fittings before assembly.

D. Soldered Joints: Apply ASTM B 813, water-flushable flux, unless otherwise indicated, to tube end. Construct joints according to ASTM B 828 or CDA's "Copper Tube Handbook," using lead-free solder alloy complying with ASTM B 32.

E. Brazed Joints: Construct joints according to AWS's "Brazing Handbook," "Pipe and Tube" Chapter, using copper-phosphorus brazing filler metal complying with AWS A5.8.

F. Threaded Joints: Thread pipe with tapered pipe threads according to ASME B1.20.1. Cut threads full and clean using sharp dies. Ream threaded pipe ends to remove burrs and restore full ID. Join pipe fittings and valves as follows:

1. Apply appropriate tape or thread compound to external pipe threads unless dry seal threading is specified.
2. Damaged Threads: Do not use pipe or pipe fittings with threads that are corroded or damaged. Do not use pipe sections that have cracked or open welds.

G. Welded Joints: Construct joints according to AWS D10.12, using qualified processes and welding operators according to Part 1 "Quality Assurance" Article.

H. Flanged Joints: Select appropriate gasket material, size, type, and thickness for service application. Install gasket concentrically positioned. Use suitable lubricants on bolt threads.

I. Plastic Piping Solvent-Cement Joints: Clean and dry joining surfaces. Join pipe and fittings according to the following:

1. Comply with ASTM F 402 for safe-handling practice of cleaners, primers, and solvent cements.
2. ABS Piping: Join according to ASTM D 2235 and ASTM D 2661 Appendixes.
3. CPVC Piping: Join according to ASTM D 2846 Appendix.
4. PVC Pressure Piping: Join schedule number ASTM D 1785, PVC pipe and PVC socket fittings according to ASTM D 2672. Join other-than-schedule-number PVC pipe and socket fittings according to ASTM D 2855.
5. PVC Nonpressure Piping: Join according to ASTM D 2855.
6. PVC to ABS Nonpressure Transition Fittings: Join according to ASTM D 3138 Appendix.

J. Plastic Pressure Piping Gasketed Joints: Join according to ASTM D 3139.

K. Plastic Nonpressure Piping Gasketed Joints: Join according to ASTM D 3212.

3.4 PIPING CONNECTIONS

A. Make connections according to the following, unless otherwise indicated:

1. Install unions, in piping NPS 2 (DN 50) and smaller, adjacent to each valve and at final connection to each piece of equipment.
2. Install flanges, in piping NPS 2-1/2 (DN 65) and larger, adjacent to flanged valves and at final connection to each piece of equipment.
3. Dry Piping Systems: Install dielectric unions and flanges to connect piping materials of dissimilar metals.
4. Wet Piping Systems: Install dielectric coupling and nipple fittings to connect piping materials of dissimilar metals.

3.5 EQUIPMENT INSTALLATION - COMMON REQUIREMENTS

A. Install equipment to allow maximum possible headroom unless specific mounting heights are not indicated.

B. Install equipment level and plumb, parallel and perpendicular to other building systems and components in exposed interior spaces, unless otherwise indicated.

C. Install plumbing equipment to facilitate service, maintenance, and repair or replacement of components. Connect equipment for ease of disconnecting, with minimum interference to other installations. Extend grease fittings to accessible locations.

D. Install equipment to allow right of way for piping installed at required slope.

3.6 PAINTING

A. Painting of plumbing systems, equipment, and components is specified in Division 09 Sections "Interior Painting" and "Exterior Painting."

B. Damage and Touchup: Repair marred and damaged factory-painted finishes with materials and procedures to match original factory finish.

3.7 CONCRETE BASES

A. Concrete Bases: Anchor equipment to concrete base according to equipment manufacturer's written instructions and according to seismic codes at Project.

1. Construct concrete bases of dimensions indicated, but not less than 4 inches larger in all directions than supported unit.
2. Install dowel rods to connect concrete base to concrete floor. Unless otherwise indicated, install dowel rods on 18-inch centers around the full perimeter of the base.
3. Install epoxy-coated anchor bolts for supported equipment that extend through concrete base, and anchor into structural concrete floor.
4. Place and secure anchorage devices. Use supported equipment manufacturer's setting drawings, templates, diagrams, instructions, and directions furnished with items to be embedded.
5. Install anchor bolts to elevations required for proper attachment to supported equipment.
6. Install anchor bolts according to anchor-bolt manufacturer's written instructions.
7. Use 3000-psi, twenty-eight (28) day compressive-strength concrete and reinforcement as specified in Section 032000 "Concrete Work."

3.8 ERECTION OF METAL SUPPORTS AND ANCHORAGES

A. Refer to Section 055000 "Metal Fabrications" for structural steel.

B. Cut, fit, and place miscellaneous metal supports accurately in location, alignment, and elevation to support and anchor plumbing materials and equipment.

C. Field Welding: Comply with AWS D1.1.

3.9 ERECTION OF WOOD SUPPORTS AND ANCHORAGES

A. Cut, fit, and place wood grounds, nailers, blocking, and anchorages to support, and anchor plumbing materials and equipment.

B. Select fastener sizes that will not penetrate members if opposite side will be exposed to view or will receive finish materials. Tighten connections between members. Install fasteners without splitting wood members.

C. Attach to substrates as required to support applied loads.

3.10 GROUTING

A. Mix and install grout for plumbing equipment base bearing surfaces, pump and other equipment base plates, and anchors.

B. Clean surfaces that will come into contact with grout.

C. Provide forms as required for placement of grout.

D. Avoid air entrapment during placement of grout.

E. Place grout, completely filling equipment bases.

F. Place grout on concrete bases and provide smooth bearing surface for equipment.

G. Place grout around anchors.

H. Cure placed grout.

END OF SECTION 220500

SECTION 220516 - EXPANSION FITTINGS AND LOOPS FOR PLUMBING PIPING

PART 1 - GENERAL

1.1 RELATED DOCUMENTS

A. Drawings and general provisions of the Contract, including General and Supplementary Conditions and Division 01 Specification Sections, apply to this Section.

1.2 SUMMARY

A. Section Includes:

1. Flexible-hose packless expansion joints.
2. Pipe loops and swing connections.
3. Alignment guides and anchors.

1.3 PERFORMANCE REQUIREMENTS

A. Compatibility: Products shall be suitable for piping service fluids, materials, working pressures, and temperatures.

B. Capability: Products to absorb two hundred percent (200%) of maximum axial movement between anchors.

1.4 SUBMITTALS

A. Product Data: For each type of product indicated.

B. Delegated-Design Submittal: For each anchor and alignment guide indicated to comply with performance requirements and design criteria, including analysis data signed and sealed by the qualified professional engineer responsible for their preparation.

1. Design Calculations: Calculate requirements for thermal expansion of piping systems and for selecting and designing expansion joints, loops, and swing connections.
2. Anchor Details: Detail fabrication of each anchor indicated. Show dimensions and methods of assembly and attachment to building structure.
3. Alignment Guide Details: Detail field assembly and attachment to building structure.
4. Schedule: Indicate type, manufacturer's number, size, material, pressure rating, end connections, and location for each expansion joint.

C. Welding certificates.

D. Product Certificates: For each type of expansion joint, from manufacturer.

E. Maintenance Data: For expansion joints to include in maintenance manuals.

1.5 QUALITY ASSURANCE

A. Welding Qualifications: Qualify procedures and personnel according to the following:

1. AWS D1.1, "Structural Welding Code - Steel."
2. ASME Boiler and Pressure Vessel Code: Section IX.

PART 2 - PRODUCTS

2.1 PACKLESS EXPANSION JOINTS

A. Flexible-Hose Packless Expansion Joints:

1. Manufacturers: Subject to compliance with requirements, provide products by one (1) of the following:

   a. Flex-Hose Co., Inc.
   b. Flexicraft Industries
   c. Flex Pression Ltd.
   d. Metraflex, Inc.
   e. Unisource Manufacturing, Inc.

2. Description: Manufactured assembly with inlet and outlet elbow fittings and two (2) flexible-metal-hose legs joined by long-radius, 180-degree return bend or center section of flexible hose.
3. Flexible Hose: Corrugated-metal inner hoses and braided outer sheaths.
4. Expansion Joints for Copper Tubing NPS 2 (DN 50) and Smaller: Copper-alloy fittings with solder-joint end connections.

   a. Bronze hoses and single-braid bronze sheaths with 450 psig at 70 deg F (3100 kPa at 21 deg C) and 340 psig at 450 deg F (2340 kPa at 232 deg C) ratings.
   b. Bronze hoses and double-braid bronze sheaths with 700 psig at 70 deg F (4830 kPa at 21 deg C) and 500 psig at 450 deg F (3450 kPa at 232 deg C) ratings.

5. Expansion Joints for Copper Tubing NPS 2-1/2 to NPS 4 (DN 65 to DN 100): Copper-alloy fittings with threaded end connections.

   a. Stainless-steel hoses and single-braid, stainless-steel sheaths with 300 psig at 70 deg F (2070 kPa at 21 deg C) and 225 psig at 450 deg F (1550 kPa at 232 deg C) ratings.
   b. Stainless-steel hoses and double-braid, stainless-steel sheaths with 420 psig at 70 deg F (2890 kPa at 21 deg C) and 315 psig at 450 deg F (2170 kPa at 232 deg C) ratings.

2.2 ALIGNMENT GUIDES AND ANCHORS

A. Alignment Guides:

1. Manufacturers: Subject to compliance with requirements, provide products by one (1) of the following:

   a. Adsco Manufacturing LLC
   b. Advanced Thermal Systems, Inc.
   c. Flex-Hose Co., Inc.

d. Flexicraft Industries
e. Flex-Weld, Inc.
f. Hyspan Precision Products, Inc.
g. Metraflex, Inc.
h. Senior Flexonics Pathway
i. Unisource Manufacturing, Inc.
j. U.S. Bellows, Inc.

2. Description: Steel, factory-fabricated alignment guide, with bolted two-section outer cylinder and base for attaching to structure; with two-section guiding spider for bolting to pipe.

B. Anchor Materials:

1. Steel Shapes and Plates: ASTM A 36.
2. Bolts and Nuts: ASME B18.10 or ASTM A 183, steel hex head.
3. Washers: ASTM F 844, steel, plain, flat washers.
4. Mechanical Fasteners: Insert-wedge-type stud with expansion plug anchor for use in hardened Portland cement concrete, with tension and shear capacities appropriate for application.

a. Stud: Threaded, zinc-coated carbon steel.
b. Expansion Plug: Zinc-coated steel.
c. Washer and Nut: Zinc-coated steel.

5. Chemical Fasteners: Insert-type-stud, bonding-system anchor for use with hardened Portland cement concrete, with tension and shear capacities appropriate for application.

a. Bonding Material: ASTM C 881, Type IV, Grade 3, two-component epoxy resin suitable for surface temperature of hardened concrete where fastener is to be installed.
b. Stud: ASTM A 307, zinc-coated carbon steel with continuous thread on stud unless otherwise indicated.
c. Washer and Nut: Zinc-coated steel.

PART 3 - EXECUTION

3.1 EXPANSION-JOINT INSTALLATION

A. Install expansion joints of sizes matching sizes of piping in which they are installed.

3.2 PIPE LOOP AND SWING CONNECTION INSTALLATION

A. Install pipe loops cold-sprung in tension or compression as required to partly absorb tension or compression produced during anticipated change in temperature.

B. Connect risers and branch connections to mains with at least five (5) pipe fittings including tee in main.

3.3 ALIGNMENT-GUIDE AND ANCHOR INSTALLATION

A. Install alignment guides to guide expansion and to avoid end-loading and torsional stress.

B. Install two (2) guides on each side of pipe expansion fittings and loops. Install guides nearest to expansion joint not more than four (4) pipe diameters from expansion joint.

C. Attach guides to pipe and secure guides to building structure.

D. Install anchors at locations to prevent stresses from exceeding those permitted by ASME B31.9 and to prevent transfer of loading and stresses to connected equipment.

E. Anchor Attachments:

1. Anchor Attachment to Black-Steel Pipe: Attach by welding. Comply with ASME B31.9 and ASME Boiler and Pressure Vessel Code: Section IX, "Welding and Brazing Qualifications."
2. Anchor Attachment to Galvanized-Steel Pipe: Attach with pipe hangers. Use MSS SP-69, Type 42, riser clamp welded to anchor.
3. Anchor Attachment to Copper Tubing: Attach with pipe hangers. Use MSS SP-69, Type 24, U-bolts bolted to anchor.

F. Fabricate and install steel anchors by welding steel shapes, plates, and bars. Comply with ASME B31.9 and AWS D1.1.

1. Anchor Attachment to Steel Structural Members: Attach by welding.
2. Anchor Attachment to Concrete Structural Members: Attach by fasteners. Follow fastener manufacturer's written instructions.

G. Use grout to form flat bearing surfaces for guides and anchors attached to concrete.

END OF SECTION 220516

SECTION 220519 - METERS AND GAGES FOR PLUMBING PIPING

PART 1 - GENERAL

1.1 RELATED DOCUMENTS

A. Drawings and general provisions of the Contract, including General and Supplementary Conditions and Division 01 Specification Sections, apply to this Section.

1.2 SUMMARY

A. Section Includes:

1. Liquid-in-glass thermometers.
2. Thermowells.
3. Dial-type pressure gages.
4. Gage attachments.
5. Test plugs.
6. Test-plug kits.
7. Sight flow indicators.

B. Related Sections:

1. Division 21, Section 213113 "Electric Drive, Centrifugal Fire Pumps” for meters on fire pump piping systems.
2. Division 21 fire-suppression piping Sections for fire-protection pressure gages.

1.3 SUBMITTALS

A. Product Data: For each type of product indicated.

B. Product Certificates: For each type of meter and gage, from manufacturer.

C. Operation and Maintenance Data: For meters and gages to include in operation and maintenance manuals.

PART 2 - PRODUCTS

2.1 LIQUID-IN-GLASS THERMOMETERS

A. Metal-Case, Compact-Style, Liquid-in-Glass Thermometers:

1. Manufacturers: Subject to compliance with requirements, provide products by one (1) of the following:

a. Trerice, H. O. Co.
b. Dresser Industries, Inc.; Instrument Div.; Weksler Instruments Operating Unit
c. Palmer Instruments, Inc.

2. Standard: ASME B40.200.
3. Case: Cast aluminum; 6-inch nominal size.
4. Case Form: Back angle or straight for best readability where mounted.
5. Tube: Glass with magnifying lens and blue or red organic liquid.
6. Tube Background: Nonreflective aluminum with permanently etched scale markings graduated in deg F.
7. Window: Glass.
8. Stem: Aluminum or brass and of length to suit installation.

    a. Design for Thermowell Installation: Bare stem.

9. Connector: ¾ inch, with ASME B1.1 screw threads.
10. Accuracy: Plus or minus one percent (+/- 1%) of scale range or one scale division, to a maximum of one and one half percent (1.5%) of scale range.

2.2 THERMOWELLS

A. Thermowells:

1. Standard: ASME B40.200.
2. Description: Pressure-tight, socket-type fitting made for insertion into piping tee fitting.
3. Material for Use with Copper Tubing**:** CNR
4. Type: Stepped shank unless straight or tapered shank is indicated.
5. External Threads: NPS 1/2, NPS 3/4, or NPS 1, (DN 15, DN 20, or NPS 25,) ASME B1.20.1 pipe threads.
6. Internal Threads: ½, ¾, and 1 inch, with ASME B1.1 screw threads.
7. Bore: Diameter required to match thermometer bulb or stem.
8. Insertion Length: Length required to match thermometer bulb or stem.
9. Lagging Extension: Include on thermowells for insulated piping and tubing.
10. Bushings: For converting size of thermowell's internal screw thread to size of thermometer connection.

B. Heat-Transfer Medium: Mixture of graphite and glycerin.

2.3 PRESSURE GAGES

A. Direct-Mounted, Metal-Case, Dial-Type Pressure Gages:

1. Manufacturers: Subject to compliance with requirements, provide products by one (1) of the following:

    a. AMETEK, Inc.; U.S. Gauge
    b. Ashcroft Inc.
    c. Palmer Wahl Instrumentation Group
    d. Trerice, H. O. Co.
    e. Weiss Instruments, Inc.

2. Standard: ASME B40.100.
3. Case: Cast aluminum or drawn steel, 4½-inch nominal diameter.
4. Pressure-Element Assembly: Bourdon tube type, unless otherwise indicated.

5. Pressure Connection: Brass, with NPS 1/4 (DN 8) ASME B1.20.1 pipe threads and bottom-outlet type unless back-outlet type is indicated.
6. Movement: Mechanical, with link to pressure element and connection to pointer.
7. Dial: Nonreflective aluminum with permanently etched scale markings graduated in psi.
8. Pointer: Dark-colored metal.
9. Window: Glass.
10. Ring: Stainless steel.
11. Accuracy: Grade A, plus or minus one percent (+/- 1%) of middle half of scale range.

2.4 GAGE ATTACHMENTS

A. Snubbers: ASME B40.100, brass; with NPS 1/4 (DN 8), ASME B1.20.1 pipe threads and porous-metal-type surge-dampening device. Include extension for use on insulated piping.

B. Valves: Brass ball, with NPS 1/4 (DN 8), ASME B1.20.1 pipe threads.

PART 3 - EXECUTION

3.1 INSTALLATION

A. Install thermowells with socket extending one-third of pipe diameter and in vertical position in piping tees.

B. Install thermowells of sizes required to match thermometer connectors. Include bushings if required to match sizes.

C. Install thermowells with extension on insulated piping.

D. Fill thermowells with heat-transfer medium.

E. Install direct-mounted thermometers in thermowells and adjust vertical and tilted positions.

F. Install direct-mounted pressure gages in piping tees with pressure gage located on pipe at the most readable position.

G. Install valve and snubber in piping for each pressure gage for fluids.

H. Install test plugs in piping tees.

I. Install thermometers in the following locations:

1. Inlet and outlet of each water heater.

2. Outlet of each thermostatic mixing valve, if not provided integral to mixing valve pre-piped package

J. Install pressure gages in the following locations:

1. Inlet and outlet of each pressure-reducing valve.
2. Suction and discharge of each domestic water pump.

3.2 CONNECTIONS

A. Install meters and gages adjacent to machines and equipment to allow service and maintenance of meters, gages, machines, and equipment.

3.3 ADJUSTING

A. Adjust faces of meters and gages to proper angle for best visibility.

3.4 THERMOMETER SCHEDULE

A. Thermometers at inlet and outlet of each domestic water heater shall be the following:

1. Liquid-in-glass type.

B. Thermometer stems shall be of length to match thermowell insertion length.

3.5 THERMOMETER SCALE-RANGE SCHEDULE

A. Scale Range for Domestic Cold-Water Piping: 0 to 150 deg F

B. Scale Range for Domestic Hot-Water and Hot-Water Recirculation Piping: 0 to 250 deg F

3.6 PRESSURE-GAGE SCHEDULE

A. Pressure gages at inlet and outlet of each water pressure-reducing valve shall be the following:

1. Bourdon tube type, dry, direct mounted.

B. Pressure gages at suction and discharge of each domestic water pump shall be the following:

1. Bourdon tube type, dry, direct mounted.

3.7 PRESSURE-GAGE SCALE-RANGE SCHEDULE

A. Scale Range for Domestic Water Piping: 0 to 200 psi.

END OF SECTION 220519

SECTION 220523 - GENERAL-DUTY VALVES FOR PLUMBING PIPING

PART 1 - GENERAL

1.1 RELATED DOCUMENTS

A. Drawings and general provisions of the Contract, including General and Supplementary Conditions and Division 01 Specification Sections, apply to this Section.

1.2 SUMMARY

A. Section Includes:

1. Bronze ball valves.
2. Bronze swing check valves.
3. Bronze gate valves.

B. Related Sections:

1. Division 22 plumbing piping Sections for specialty valves applicable to those Sections only.
2. Section 220553 "Identification for Plumbing Piping and Equipment" for valve tags and schedules.

1.3 DEFINITIONS

A. CWP: Cold working pressure.

B. EPDM: Ethylene propylene copolymer rubber.

C. NBR: Acrylonitrile-butadiene, Buna-N, or nitrile rubber.

D. NRS: Nonrising stem.

E. OS&Y: Outside screw and yoke.

F. RS: Rising stem.

G. SWP: Steam working pressure.

1.4 SUBMITTALS

A. Product Data: For each type of valve indicated.

1.5 QUALITY ASSURANCE

A. Source Limitations for Valves: Obtain each type of valve from single source from single manufacturer.

B. ASME Compliance:

1. ASME B16.10 and ASME B16.34 for ferrous valve dimensions and design criteria.
2. ASME B31.1 for power piping valves.
3. ASME B31.9 for building services piping valves.

C. NSF Compliance:
1. NSF 61 for valve materials for potable-water service.
2. *NSF 372 Lead-Free ANSI 3rd Party Certified, for all products coming in contact with potable water, except for products specifically exempted from such certification by NSF 372.*

1.6 DELIVERY, STORAGE, AND HANDLING

A. Prepare valves for shipping as follows:

1. Protect internal parts against rust and corrosion.
2. Protect threads, flange faces, grooves, and weld ends.
3. Set angle, gate, and globe valves closed to prevent rattling.
4. Set ball and plug valves open to minimize exposure of functional surfaces.
5. Block check valves in either closed or open position.

B. Use the following precautions during storage:

1. Maintain valve end protection.
2. Store valves indoors and maintain at higher than ambient dew point temperature. If outdoor storage is necessary, store valves off the ground in watertight enclosures.

C. Use sling to handle large valves; rig sling to avoid damage to exposed parts. Do not use handwheels or stems as lifting or rigging points.

PART 2 - PRODUCTS

2.1 GENERAL REQUIREMENTS FOR VALVES

A. Refer to valve schedule articles for applications of valves.

B. Valve Pressure and Temperature Ratings: Not less than indicated and as required for system pressures and temperatures.

C. Valve Sizes: Same as upstream piping unless otherwise indicated.

D. Valve Actuator Types:

1. Handlever: For quarter-turn valves NPS 6 (DN 150) and smaller.

E. Valves in Insulated Piping: With 2-inch stem extensions and the following features:

1. Gate Valves: With rising stem.

2. Ball Valves: With extended operating handle of non-thermal-conductive material, and protective sleeve that allows operation of valve without breaking the vapor seal or disturbing insulation.

F. Valve-End Connections:

1. Grooved: With grooves according to AWWA C606.
2. Solder Joint: With sockets according to ASME B16.18.
3. Threaded: With threads according to ASME B1.20.1.

G. Valve Bypass and Drain Connections: MSS SP-45.

2.2 BRONZE BALL VALVES

A. Two-Piece, Full-Port, Bronze NSF 372 Lead-Free ANSI 3rd Party Certified Ball Valves with Stainless-Steel Trim:

1. Manufacturers: Subject to compliance with requirements, provide products by one (1) of the following:

a. Conbraco Industries, Inc.; Apollo Valves
b. Hammond Valve
c. Milwaukee Valve Company
d. NIBCO INC.
e. Watts Regulator Co.; a division of Watts Water Technologies, Inc.

2. Description:

a. Standard: MSS SP-110.
b. SWP Rating: 150 psig.
c. CWP Rating: 600 psig.
d. Body Design: Two-piece.
e. Body Material: Bronze.
f. Ends: Threaded.
g. Seats: PTFE or TFE.
h. Stem: Stainless steel.
i. Ball: Stainless steel, vented.
j. Port: Full.

2.3 BRONZE SWING CHECK VALVES

A. Class 150, Bronze NSF 372 Lead-Free ANSI 3rd Party Certified Swing Check Valves with Bronze Disc:

1. Manufacturers: Subject to compliance with requirements, provide products by one (1) of the following:

a. American Valve, Inc.
b. Crane Co.; Crane Valve Group
c. Milwaukee Valve Company
d. NIBCO INC.

e. Red-White Valve Corporation

2. Description:

a. Standard: MSS SP-80, Type 3.
b. CWP Rating: 300 psig.
c. Body Design: Horizontal flow.
d. Body Material: ASTM B 62, bronze.
e. Ends: Threaded.
f. Disc and Seat: Bronze; renewable

2.4 BRONZE GATE VALVES

A. Class 150, NRS Bronze NSF 372 Lead-Free ANSI 3rd Party Certified Gate Valves:

1. Manufacturers: Subject to compliance with requirements, provide products by one (1) of the following:

a. Hammond Valve
b. Milwaukee Valve Company
c. NIBCO INC.
d. Red-White Valve Corporation
e. Watts Regulator Co.; a division of Watts Water Technologies, Inc.

2. Description:

a. Standard: MSS SP-80, Type 1.
b. CWP Rating: 300 psig.
c. Body Material: ASTM B 62, bronze with integral seat and union-ring bonnet.
d. Ends: Threaded.
e. Stem: Bronze.
f. Disc: Solid wedge; bronze.
g. Packing: Asbestos free.
h. Handwheel: Malleable iron.

PART 3 - EXECUTION

3.1 EXAMINATION

A. Examine valve interior for cleanliness, freedom from foreign matter, and corrosion. Remove special packing materials, such as blocks, used to prevent disc movement during shipping and handling.

B. Operate valves in positions from fully open to fully closed. Examine guides and seats made accessible by such operations.

C. Examine threads on valve and mating pipe for form and cleanliness.

D. Examine mating flange faces for conditions that might cause leakage. Check bolting for proper size, length, and material. Verify that gasket is of proper size, that its material composition is suitable for service, and that it is free from defects and damage.

E. Do not attempt to repair defective valves; replace with new valves.

3.2 VALVE INSTALLATION

A. Install valves with unions or flanges at each piece of equipment arranged to allow service, maintenance, and equipment removal without system shutdown.

B. Locate valves for easy access and provide separate support where necessary.

C. Install valves in horizontal piping with stem at or above center of pipe.

D. Install valves in position to allow full stem movement.

E. Install check valves for proper direction of flow and as follows:

1. Swing Check Valves: In horizontal position with hinge pin level.

3.3 ADJUSTING

A. Adjust or replace valve packing after piping systems have been tested and put into service but before final adjusting and balancing. Replace valves if persistent leaking occurs.

3.4 GENERAL REQUIREMENTS FOR VALVE APPLICATIONS

A. If valve applications are not indicated, use the following:

1. Shutoff Service: Ball or gate valves.
2. Throttling Service: Ball valves.
3. Pump-Discharge Check Valves:

a. NPS 2 (DN 50) and Smaller: Bronze swing check valves with bronze disc.

B. If valves with specified SWP classes or CWP ratings are not available, the same types of valves with higher SWP classes or CWP ratings may be substituted.

C. Select valves, except wafer types, with the following end connections:

1. For Copper Tubing, NPS 2 (DN 50) and Smaller: Threaded ends except where solder-joint valve-end option is indicated in valve schedules below.
2. For Copper Tubing, NPS 2-1/2 to NPS 4 (DN 65 to DN 100): Flanged ends except where threaded valve-end option is indicated in valve schedules below.

3.5 DOMESTIC, HOT- AND COLD-WATER VALVE SCHEDULE

A. Pipe NPS 2 (DN 50) and Smaller:

1. Bronze Valves: May be provided with solder-joint ends instead of threaded ends.
2. Ball Valves: Two-piece, full port, bronze, with stainless-steel trim.

3. Bronze Swing Check Valves: Class 150, bronze disc.
4. Bronze Gate Valves: Class 150, NRS.

END OF SECTION 220523

SECTION 220529 - HANGERS AND SUPPORTS FOR PLUMBING PIPING AND EQUIPMENT

PART 1 - GENERAL

1.1 RELATED DOCUMENTS

A. Drawings and general provisions of the Contract, including General and Supplementary Conditions and Division 01 Specification Sections, apply to this Section.

1.2 SUMMARY

A. Section Includes:

1. Metal pipe hangers and supports.
2. Trapeze pipe hangers.
3. Metal framing systems.
4. Thermal-hanger shield inserts.
5. Fastener systems.
6. Pipe stands.
7. Pipe positioning systems.
8. Equipment supports.

B. Related Sections:

1. Section 055000 "Metal Fabrications" for structural-steel shapes and plates for trapeze hangers for pipe and equipment supports.
2. Division 21 fire-suppression piping Sections for pipe hangers for fire-suppression piping.
3. Section 220516 "Expansion Fittings and Loops for Plumbing Piping" for pipe guides and anchors.
4. Section 220548 "Vibration and Seismic Controls for Plumbing Piping and Equipment" for vibration isolation devices.

1.3 DEFINITIONS

A. MSS: Manufacturers Standardization Society of The Valve and Fittings Industry Inc.

1.4 PERFORMANCE REQUIREMENTS

A. Delegated Design: Design trapeze pipe hangers and equipment supports, including comprehensive engineering analysis by a qualified professional engineer, using performance requirements and design criteria indicated.

B. Structural Performance: Hangers and supports for plumbing piping and equipment shall withstand the effects of gravity loads and stresses within limits and under conditions indicated according to ASCE/SEI 7.

1. Design supports for multiple pipes, including pipe stands, capable of supporting combined weight of supported systems, system contents, and test water.
2. Design equipment supports capable of supporting combined operating weight of supported equipment and connected systems and components.

3. Design seismic-restraint hangers and supports for piping and equipment and obtain approval from authorities having jurisdiction.

1.5 SUBMITTALS

A. Product Data: For each type of product indicated.

B. Shop Drawings: Signed and sealed by a qualified professional engineer. Show fabrication and installation details and include calculations for the following; include Product Data for components:

1. Trapeze pipe hangers.
2. Metal framing systems.
3. Fiberglass strut systems.
4. Pipe stands.
5. Equipment supports.

C. Delegated-Design Submittal: For trapeze hangers indicated to comply with performance requirements and design criteria, including analysis data signed and sealed by the qualified professional engineer responsible for their preparation.

1. Detail fabrication and assembly of trapeze hangers.
2. Design Calculations: Calculate requirements for designing trapeze hangers.

D. Welding certificates.

1.6 QUALITY ASSURANCE

A. Structural Steel Welding Qualifications: Qualify procedures and personnel according to AWS D1.1, "Structural Welding Code - Steel."

B. Pipe Welding Qualifications: Qualify procedures and operators according to ASME Boiler and Pressure Vessel Code.

PART 2 - PRODUCTS

2.1 METAL PIPE HANGERS AND SUPPORTS

A. Carbon-Steel Pipe Hangers and Supports:

1. Description: MSS SP-58, Types 1 through 58, factory-fabricated components.
2. Galvanized Metallic Coatings: Pregalvanized or hot dipped.
3. Nonmetallic Coatings: Plastic coating, jacket, or liner.
4. Padded Hangers: Hanger with fiberglass or other pipe insulation pad or cushion to support bearing surface of piping.
5. Hanger Rods: Continuous-thread rod, nuts, and washer made of carbon steel.

B. Copper Pipe Hangers:

1. Description: MSS SP-58, Types 1 through 58, copper-coated-steel, factory-fabricated components.

2. Hanger Rods: Continuous-thread rod, nuts, and washer made of copper-coated steel.

2.2 TRAPEZE PIPE HANGERS

A. Description: MSS SP-69, Type 59, shop- or field-fabricated pipe-support assembly made from structural carbon-steel shapes with MSS SP-58 carbon-steel hanger rods, nuts, saddles, and U-bolts.

2.3 METAL FRAMING SYSTEMS

A. MFMA Manufacturer Metal Framing Systems:

1. Manufacturers: Subject to compliance with requirements, provide products by one (1) of the following:

a. Allied Tube & Conduit
b. Cooper B-Line, Inc.
c. Flex-Strut Inc.
d. Thomas & Betts Corporation
e. Unistrut Corporation; Tyco International, Ltd.

2. Description: Shop- or field-fabricated pipe-support assembly for supporting multiple parallel pipes.
3. Standard: MFMA-4.
4. Channels: Continuous slotted steel channel with inturned lips.
5. Channel Nuts: Formed or stamped steel nuts or other devices designed to fit into channel slot and, when tightened, prevent slipping along channel.
6. Hanger Rods: Continuous-thread rod, nuts, and washer made of carbon steel.
7. Metallic Coating: Hot-dipped galvanized.

2.4 THERMAL-HANGER SHIELD INSERTS

A. Manufacturers: Subject to compliance with requirements, provide products by one (1) of the following:

1. Carpenter & Paterson, Inc.
2. Clement Support Services
3. ERICO International Corporation
4. PHS Industries, Inc.
5. Piping Technology & Products, Inc.

B. Insulation-Insert Material for Cold Piping: Water-repellent treated, ASTM C 533, Type I calcium silicate with 100-psig or ASTM C 552, Type II cellular glass with 100-psig minimum compressive strength.

C. Insulation-Insert Material for Hot Piping: Water-repellent treated, ASTM C 533, Type I calcium silicate with 100-psig or ASTM C 552, Type II cellular glass with 100-psig minimum compressive strength.

D. For Trapeze or Clamped Systems: Insert and shield shall cover entire circumference of pipe.

E. For Clevis or Band Hangers: Insert and shield shall cover lower 180 degrees of pipe.

F. Insert Length: Extend 2 inches beyond sheet metal shield for piping operating below ambient air temperature.

2.5 FASTENER SYSTEMS

A. Powder-Actuated Fasteners: Threaded-steel stud, for use in hardened Portland cement concrete with pull-out, tension, and shear capacities appropriate for supported loads and building materials where used.

B. Mechanical-Expansion Anchors: Insert-wedge-type, stainless steel anchors, for use in hardened Portland cement concrete; with pull-out, tension, and shear capacities appropriate for supported loads and building materials where used.

2.6 PIPE STANDS

A. General Requirements for Pipe Stands: Shop- or field-fabricated assemblies made of manufactured corrosion-resistant components to support roof-mounted piping.

B. Compact Pipe Stand: One-piece plastic unit with integral-rod roller, pipe clamps, or V-shaped cradle to support pipe, for roof installation without membrane penetration.

C. Low-Type, Single-Pipe Stand: One-piece stainless-steel base unit with plastic roller, for roof installation without membrane penetration.

D. High-Type, Single-Pipe Stand:

1. Description: Assembly of base, vertical and horizontal members, and pipe support, for roof installation without membrane penetration.
2. Base: Stainless steel.
3. Vertical Members: Two (2) or more cadmium-plated-steel or stainless-steel, continuous-thread rods.
4. Horizontal Member: Cadmium-plated-steel or stainless-steel rod with plastic or stainless-steel, roller-type pipe support.

E. High-Type, Multiple-Pipe Stand:

1. Description: Assembly of bases, vertical and horizontal members, and pipe supports, for roof installation without membrane penetration.
2. Bases: One (1) or more; plastic.
3. Vertical Members: Two (2) or more protective-coated-steel channels.
4. Horizontal Member: Protective-coated-steel channel.
5. Pipe Supports: Galvanized-steel, clevis-type pipe hangers.

F. Curb-Mounting-Type Pipe Stands: Shop- or field-fabricated pipe supports made from structural-steel shapes, continuous-thread rods, and rollers, for mounting on permanent stationary roof curb.

2.7 PIPE POSITIONING SYSTEMS

A. Description: IAPMO PS 42, positioning system of metal brackets, clips, and straps for positioning piping in pipe spaces; for plumbing fixtures in commercial applications.

2.8 EQUIPMENT SUPPORTS

A. Description: Welded, shop- or field-fabricated equipment support made from structural carbon-steel shapes.

2.9 MISCELLANEOUS MATERIALS

A. Structural Steel: ASTM A 3, carbon-steel plates, shapes, and bars; black and galvanized.

B. Grout: ASTM C 1107, factory-mixed and -packaged, dry, hydraulic-cement, nonshrink and nonmetallic grout; suitable for interior and exterior applications.

1. Properties: Nonstaining, noncorrosive, and nongaseous.
2. Design Mix: 5000-psi, twenty-eight (28) day compressive strength.

PART 3 - EXECUTION

3.1 HANGER AND SUPPORT INSTALLATION

A. Metal Pipe-Hanger Installation: Comply with MSS SP-69 and MSS SP-89. Install hangers, supports, clamps, and attachments as required to properly support piping from the building structure.

B. Metal Trapeze Pipe-Hanger Installation: Comply with MSS SP-69 and MSS SP-89. Arrange for grouping of parallel runs of horizontal piping, and support together on field-fabricated trapeze pipe hangers.

1. Pipes of Various Sizes: Support together and space trapezes for smallest pipe size or install intermediate supports for smaller diameter pipes as specified for individual pipe hangers.
2. Field fabricate from ASTM A 36, carbon-steel shapes selected for loads being supported. Weld steel according to AWS D1.1.

C. Metal Framing System Installation: Arrange for grouping of parallel runs of piping, and support together on field-assembled metal framing systems.

D. Thermal-Hanger Shield Installation: Install in pipe hanger or shield for insulated piping.

E. Fastener System Installation:

1. Install powder-actuated fasteners for use in lightweight concrete or concrete slabs less than 4 inches thick in concrete after concrete is placed and completely cured. Use operators that are licensed by powder-actuated tool manufacturer. Install fasteners according to powder-actuated tool manufacturer's operating manual.
2. Install mechanical-expansion anchors in concrete after concrete is placed and completely cured. Install fasteners according to manufacturer's written instructions.

F. Pipe Stand Installation:

1. Pipe Stand Types except Curb-Mounted Type: Assemble components and mount on smooth roof surface. Do not penetrate roof membrane.
2. Curb-Mounted-Type Pipe Stands: Assemble components or fabricate pipe stand and mount on permanent, stationary roof curb. See Section 077200 "Roof Accessories" for curbs.

G. Pipe Positioning-System Installation: Install support devices to make rigid supply and waste piping connections to each plumbing fixture. See Division 22 plumbing fixture Sections for requirements for pipe positioning systems for plumbing fixtures.

H. Install hangers and supports complete with necessary attachments, inserts, bolts, rods, nuts, washers, and other accessories.

I. Equipment Support Installation: Fabricate from welded-structural-steel shapes.

J. Install hangers and supports to allow controlled thermal and seismic movement of piping systems, to permit freedom of movement between pipe anchors, and to facilitate action of expansion joints, expansion loops, expansion bends, and similar units.

K. Install lateral bracing with pipe hangers and supports to prevent swaying.

L. Install building attachments within concrete slabs or attach to structural steel. Install additional attachments at concentrated loads, including valves, flanges, and strainers, NPS 2-1/2 (DN 65) and larger and at changes in direction of piping. Install concrete inserts before concrete is placed; fasten inserts to forms and install reinforcing bars through openings at top of inserts.

M. Load Distribution: Install hangers and supports so that piping live and dead loads and stresses from movement will not be transmitted to connected equipment.

N. Pipe Slopes: Install hangers and supports to provide indicated pipe slopes and to not exceed maximum pipe deflections allowed by ASME B31.9 for building services piping.

O. Insulated Piping:

1. Attach clamps and spacers to piping.

   a. Piping Operating above Ambient Air Temperature: Clamp may project through insulation.
   b. Piping Operating below Ambient Air Temperature: Use thermal-hanger shield insert with clamp sized to match OD of insert.
   c. Do not exceed pipe stress limits allowed by ASME B31.9 for building services piping.

2. Install MSS SP-58, Type 39, protection saddles if insulation without vapor barrier is indicated. Fill interior voids with insulation that matches adjoining insulation.

   a. Option: Thermal-hanger shield inserts may be used. Include steel weight-distribution plate for pipe NPS 4 (DN 100) and larger if pipe is installed on rollers.

3. Install MSS SP-58, Type 40, protective shields on cold piping with vapor barrier. Shields shall span an arc of 180 degrees.

    a. Option: Thermal-hanger shield inserts may be used. Include steel weight-distribution plate for pipe NPS 4 (DN 100) and larger if pipe is installed on rollers.

4. Shield Dimensions for Pipe: Not less than the following:

    a. NPS 1/4 to NPS 3-1/2 (DN 8 to DN 90): 12 inches long and 0.048 inch thick.
    b. NPS 4 (DN 100): 12 inches long and 0.06 inch thick.
    c. NPS 5 and NPS 6 (DN 125 and DN 150): 18 inches long and 0.06 inch thick.
    d. NPS 8 to NPS 14 (DN 200 to DN 350): 24 inches long and 0.075 inch thick.
    e. NPS 16 to NPS 24 (DN 400 to DN 600): 24 inches long and 0.105 inch thick.

5. Pipes NPS 8 (DN 200) and Larger: Include wood or reinforced calcium-silicate-insulation inserts of length at least as long as protective shield.
6. Thermal-Hanger Shields: Install with insulation same thickness as piping insulation.

3.2 EQUIPMENT SUPPORTS

A. Fabricate structural-steel stands to suspend equipment from structure overhead or to support equipment above floor.

B. Grouting: Place grout under supports for equipment and make bearing surface smooth.

C. Provide lateral bracing, to prevent swaying, for equipment supports.

3.3 METAL FABRICATIONS

A. Cut, drill, and fit miscellaneous metal fabrications for trapeze pipe hangers and equipment supports.

B. Fit exposed connections together to form hairline joints. Field weld connections that cannot be shop welded because of shipping size limitations.

C. Field Welding: Comply with AWS D1.1 procedures for shielded, metal arc welding; appearance and quality of welds; and methods used in correcting welding work; and with the following:

1. Use materials and methods that minimize distortion and develop strength and corrosion resistance of base metals.
2. Obtain fusion without undercut or overlap.
3. Remove welding flux immediately.
4. Finish welds at exposed connections so no roughness shows after finishing and so contours of welded surfaces match adjacent contours.

3.4 ADJUSTING

A. Hanger Adjustments: Adjust hangers to distribute loads equally on attachments and to achieve indicated slope of pipe.

B. Trim excess length of continuous-thread hanger and support rods to 1½ inches.

3.5 PAINTING

A. Touchup: Clean field welds and abraded areas of shop paint. Paint exposed areas immediately after erecting hangers and supports. Use same materials as used for shop painting. Comply with SSPC-PA 1 requirements for touching up field-painted surfaces.

1. Apply paint by brush or spray to provide a minimum dry film thickness of 2.0 mils.

B. Touchup: Cleaning and touchup painting of field welds, bolted connections, and abraded areas of shop paint on miscellaneous metal are specified in Division 09 painting Sections.

C. Galvanized Surfaces: Clean welds, bolted connections, and abraded areas and apply galvanizing-repair paint to comply with ASTM A 780.

3.6 HANGER AND SUPPORT SCHEDULE

A. Specific hanger and support requirements are in Sections specifying piping systems and equipment.

B. Comply with MSS SP-69 for pipe-hanger selections and applications that are not specified in piping system Sections.

C. Use hangers and supports with galvanized metallic coatings for piping and equipment that will not have field-applied finish.

D. Use nonmetallic coatings on attachments for electrolytic protection where attachments are in direct contact with copper tubing.

E. Use carbon-steel pipe hangers and supports, metal trapeze pipe hangers, and metal framing systems and attachments for general service applications.

F. Use copper-plated pipe hangers and copper or stainless-steel attachments for copper piping and tubing.

G. Use padded hangers for piping that is subject to scratching.

H. Use thermal-hanger shield inserts for insulated piping and tubing.

I. Horizontal-Piping Hangers and Supports: Unless otherwise indicated and except as specified in piping system Sections, install the following types:

1. Adjustable, Steel Clevis Hangers (MSS Type 1): For suspension of noninsulated or insulated, stationary pipes NPS 1/2 to NPS 30 (DN 15 to DN 750).
2. Yoke-Type Pipe Clamps (MSS Type 2): For suspension of up to 1050 deg F (566 deg C), pipes NPS 4 to NPS 24 (DN 100 to DN 600), requiring up to 4 inches of insulation.
3. Carbon- or Alloy-Steel, Double-Bolt Pipe Clamps (MSS Type 3): For suspension of pipes NPS 3/4 to NPS 36 (DN 20 to DN 900), requiring clamp flexibility and up to 4 inches of insulation.
4. Steel Pipe Clamps (MSS Type 4): For suspension of cold and hot pipes NPS 1/2 to NPS 24 (DN 15 to DN 600) if little or no insulation is required.

5. Pipe Hangers (MSS Type 5): For suspension of pipes NPS 1/2 to NPS 4 (DN 15 to DN 100), to allow off-center closure for hanger installation before pipe erection.
6. Adjustable, Swivel Split- or Solid-Ring Hangers (MSS Type 6): For suspension of noninsulated, stationary pipes NPS 3/4 to NPS 8 (DN 20 to DN 200).
7. Adjustable, Steel Band Hangers (MSS Type 7): For suspension of noninsulated, stationary pipes NPS 1/2 to NPS 8 (DN 15 to DN 200).
8. Adjustable Band Hangers (MSS Type 9): For suspension of noninsulated, stationary pipes NPS 1/2 to NPS 8 (DN 15 to DN 200).
9. Adjustable, Swivel-Ring Band Hangers (MSS Type 10): For suspension of noninsulated, stationary pipes NPS 1/2 to NPS 8 (DN 15 to DN 200).
10. Split Pipe Ring with or without Turnbuckle Hangers (MSS Type 11): For suspension of noninsulated, stationary pipes NPS 3/8 to NPS 8 (DN 10 to DN 200).
11. Extension Hinged or Two-Bolt Split Pipe Clamps (MSS Type 12): For suspension of noninsulated, stationary pipes NPS 3/8 to NPS 3 (DN 10 to DN 80).
12. U-Bolts (MSS Type 24): For support of heavy pipes NPS 1/2 to NPS 30 (DN 15 to DN 750).
13. Clips (MSS Type 26): For support of insulated pipes not subject to expansion or contraction.
14. Pipe Saddle Supports (MSS Type 36): For support of pipes NPS 4 to NPS 36 (DN 100 to DN 900), with steel-pipe base stanchion support and cast-iron floor flange or carbon-steel plate.
15. Pipe Stanchion Saddles (MSS Type 37): For support of pipes NPS 4 to NPS 36 (DN 100 to DN 900), with steel-pipe base stanchion support and cast-iron floor flange or carbon-steel plate, and with U-bolt to retain pipe.
16. Adjustable Pipe Saddle Supports (MSS Type 38): For stanchion-type support for pipes NPS 2-1/2 to NPS 36 (DN 65 to DN 900) if vertical adjustment is required, with steel-pipe base stanchion support and cast-iron floor flange.
17. Single-Pipe Rolls (MSS Type 41): For suspension of pipes NPS 1 to NPS 30 (DN 25 to DN 750), from two (2) rods if longitudinal movement caused by expansion and contraction might occur.
18. Adjustable Roller Hangers (MSS Type 43): For suspension of pipes NPS 2-1/2 to NPS 24 (DN 65 to DN 600), from single rod if horizontal movement caused by expansion and contraction might occur.
19. Complete Pipe Rolls (MSS Type 44): For support of pipes NPS 2 to NPS 42 (DN 50 to DN 1050) if longitudinal movement caused by expansion and contraction might occur but vertical adjustment is not necessary.
20. Pipe Roll and Plate Units (MSS Type 45): For support of pipes NPS 2 to NPS 24 (DN 50 to DN 600) if small horizontal movement caused by expansion and contraction might occur and vertical adjustment is not necessary.
21. Adjustable Pipe Roll and Base Units (MSS Type 46): For support of pipes NPS 2 to NPS 30 (DN 50 to DN 750) if vertical and lateral adjustment during installation might be required in addition to expansion and contraction.

J. Vertical-Piping Clamps: Unless otherwise indicated and except as specified in piping system Sections, install the following types:

1. Extension Pipe or Riser Clamps (MSS Type 8): For support of pipe risers NPS 3/4 to NPS 24 (DN 24 to DN 600).
2. Carbon- or Alloy-Steel Riser Clamps (MSS Type 42): For support of pipe risers NPS 3/4 to NPS 24 (DN 20 to DN 600) if longer ends are required for riser clamps.

K. Hanger-Rod Attachments: Unless otherwise indicated and except as specified in piping system Sections, install the following types:

1. Steel Turnbuckles (MSS Type 13): For adjustment up to 6 inches for heavy loads.
2. Steel Clevises (MSS Type 14): For 120 to 450 deg F (49 to 232 deg C) piping installations.
3. Swivel Turnbuckles (MSS Type 15): For use with MSS Type 11, split pipe rings.
4. Malleable-Iron Sockets (MSS Type 16): For attaching hanger rods to various types of building attachments.
5. Steel Weldless Eye Nuts (MSS Type 17): For 120 to 450 deg F (49 to 232 deg C) piping installations.

L. Building Attachments: Unless otherwise indicated and except as specified in piping system Sections, install the following types:

1. Steel or Malleable Concrete Inserts (MSS Type 18): For upper attachment to suspend pipe hangers from concrete ceiling.
2. Top-Beam C-Clamps (MSS Type 19): For use under roof installations with bar-joist construction, to attach to top flange of structural shape.
3. Side-Beam or Channel Clamps (MSS Type 20): For attaching to bottom flange of beams, channels, or angles.
4. Center-Beam Clamps (MSS Type 21): For attaching to center of bottom flange of beams.
5. Welded Beam Attachments (MSS Type 22): For attaching to bottom of beams if loads are considerable and rod sizes are large.
6. C-Clamps (MSS Type 23): For structural shapes.
7. Top-Beam Clamps (MSS Type 25): For top of beams if hanger rod is required tangent to flange edge.
8. Side-Beam Clamps (MSS Type 27): For bottom of steel I-beams.
9. Steel-Beam Clamps with Eye Nuts (MSS Type 28): For attaching to bottom of steel I-beams for heavy loads.
10. Linked-Steel Clamps with Eye Nuts (MSS Type 29): For attaching to bottom of steel I-beams for heavy loads, with link extensions.
11. Malleable-Beam Clamps with Extension Pieces (MSS Type 30): For attaching to structural steel.
12. Welded-Steel Brackets: For support of pipes from below or for suspending from above by using clip and rod. Use one (1) of the following for indicated loads:

    a. Light (MSS Type 31): 750 lb.
    b. Medium (MSS Type 32): 1500 lb.
    c. Heavy (MSS Type 33): 3000 lb.

13. Side-Beam Brackets (MSS Type 34): For sides of steel or wooden beams.
14. Plate Lugs (MSS Type 57): For attaching to steel beams if flexibility at beam is required.
15. Horizontal Travelers (MSS Type 58): For supporting piping systems subject to linear horizontal movement where headroom is limited.

M. Saddles and Shields: Unless otherwise indicated and except as specified in piping system Sections, install the following types:

1. Steel-Pipe-Covering Protection Saddles (MSS Type 39): To fill interior voids with insulation that matches adjoining insulation.

2. Protection Shields (MSS Type 40): Of length recommended in writing by manufacturer to prevent crushing insulation.
3. Thermal-Hanger Shield Inserts: For supporting insulated pipe.

N. Spring Hangers and Supports: Unless otherwise indicated and except as specified in piping system Sections, install the following types:

1. Restraint-Control Devices (MSS Type 47): Where indicated to control piping movement.
2. Spring Cushions (MSS Type 48): For light loads if vertical movement does not exceed 1¼ inches.
3. Spring-Cushion Roll Hangers (MSS Type 49): For equipping Type 41, roll hanger with springs.
4. Spring Sway Braces (MSS Type 50): To retard sway, shock, vibration, or thermal expansion in piping systems.
5. Variable-Spring Hangers (MSS Type 51): Preset to indicated load and limit variability factor to twenty-five percent (25%) to allow expansion and contraction of piping system from hanger.
6. Variable-Spring Base Supports (MSS Type 52): Preset to indicated load and limit variability factor to twenty-five percent (25%) to allow expansion and contraction of piping system from base support.
7. Variable-Spring Trapeze Hangers (MSS Type 53): Preset to indicated load and limit variability factor to twenty-five percent (25%) to allow expansion and contraction of piping system from trapeze support.
8. Constant Supports: For critical piping stress and if necessary to avoid transfer of stress from one support to another support, critical terminal, or connected equipment. Include auxiliary stops for erection, hydrostatic test, and load-adjustment capability. These supports include the following types:

    a. Horizontal (MSS Type 54): Mounted horizontally.
    b. Vertical (MSS Type 55): Mounted vertically.
    c. Trapeze (MSS Type 56): Two (2) vertical-type supports and one trapeze member.

O. Comply with MSS SP-69 for trapeze pipe-hanger selections and applications that are not specified in piping system Sections.

P. Comply with MFMA-103 for metal framing system selections and applications that are not specified in piping system Sections.

Q. Use powder-actuated fasteners or mechanical-expansion anchors instead of building attachments where required in concrete construction.

R. Use pipe positioning systems in pipe spaces behind plumbing fixtures to support supply and waste piping for plumbing fixtures.

END OF SECTION 220529

SECTION 220548 - VIBRATION AND SEISMIC CONTROLS FOR PLUMBING PIPING AND EQUIPMENT

PART 1 - GENERAL

1.1 RELATED DOCUMENTS

A. Drawings and general provisions of the Contract, including General and Supplementary Conditions and Division 01 Specification Sections, apply to this Section.

1.2 SUMMARY

A. This Section includes the following:

1. Isolation pads.
2. Isolation mounts.
3. Restrained elastomeric isolation mounts.
4. Restrained spring isolators.
5. Housed spring mounts.
6. Elastomeric hangers.
7. Spring hangers.
8. Spring hangers with vertical-limit stops.
9. Pipe riser resilient supports.
10. Resilient pipe guides.
11. Seismic snubbers.
12. Restraining braces and cables.
13. Steel vibration isolation equipment bases.

1.3 DEFINITIONS

A. IBC: International Building Code.

B. ICC-ES: ICC-Evaluation Service.

C. OSHPD: Office of Statewide Health Planning and Development for the State of California.

D. CSBS: Connecticut State Building Code

1.4 PERFORMANCE REQUIREMENTS

A. Seismic-Restraint Loading:

1. Provide seismic restraints in accordance with the requirements of the Connecticut State Building Code.

1.5 SUBMITTALS

A. Product Data: For the following:

1. Include rated load, rated deflection, and overload capacity for each vibration isolation device.
2. Interlocking Snubbers: Include ratings for horizontal, vertical, and combined loads.

B. Delegated-Design Submittal: For vibration isolation and seismic-restraint details indicated to comply with performance requirements and design criteria, including analysis data signed and sealed by the qualified professional engineer responsible for their preparation.

1. Design Calculations: Calculate static and dynamic loading due to equipment weight and operation, seismic forces required to select vibration isolators, seismic restraints, and for designing vibration isolation bases.
2. Riser Supports: Include riser diagrams and calculations showing anticipated expansion and contraction at each support point, initial and final loads on building structure, spring deflection changes, and seismic loads. Include certification that riser system has been examined for excessive stress and that none will exist.
3. Vibration Isolation Base Details: Detail overall dimensions, including anchorages and attachments to structure and to supported equipment. Include auxiliary motor slides and rails, base weights, equipment static loads, power transmission, component misalignment, and cantilever loads.
4. Seismic-Restraint Details:

   a. Design Analysis: To support selection and arrangement of seismic restraints. Include calculations of combined tensile and shear loads.
   b. Details: Indicate fabrication and arrangement. Detail attachments of restraints to the restrained items and to the structure. Show attachment locations, methods, and spacings. Identify components, list their strengths, and indicate directions and values of forces transmitted to the structure during seismic events. Indicate association with vibration isolation devices.

C. Coordination Drawings: Show coordination of seismic bracing for plumbing piping and equipment with other systems and equipment in the vicinity, including other supports and seismic restraints.

D. Welding certificates.

E. Field quality-control test reports.

1.6 QUALITY ASSURANCE

A. Comply with seismic-restraint requirements in the CSBC unless requirements in this Section are more stringent.

B. Welding: Qualify procedures and personnel according to AWS D1.1, "Structural Welding Code - Steel."

C. Seismic-restraint devices shall have horizontal and vertical load testing and analysis and shall bear anchorage preapproval OPA number from OSHPD, preapproved by ICC-ES, or preapproved by another agency acceptable to authorities having jurisdiction, showing maximum seismic-restraint ratings. Ratings based on independent testing are preferred to ratings based on calculations. If preapproved ratings are not available, submittals based on independent testing

are preferred. Calculations (including combining shear and tensile loads) to support seismic-restraint designs must be signed and sealed by a qualified professional engineer.

PART 2 - PRODUCTS

2.1 VIBRATION ISOLATORS

A. Manufacturers: Subject to compliance with requirements, provide products by one (1) of the following:

1. Isolation Technology, Inc.
2. Kinetics Noise Control
3. Mason Industries
4. Vibration Eliminator Co., Inc.
5. Vibration Isolation

B. Restrained Mounts: All-directional mountings with seismic restraint.

1. Materials: Cast-ductile-iron or welded steel housing containing two (2) separate and opposing, oil-resistant rubber or neoprene elements that prevent central threaded element and attachment hardware from contacting the housing during normal operation.
2. Neoprene: Shock-absorbing materials compounded according to the standard for bridge-bearing neoprene as defined by AASHTO.

C. Restrained Spring Isolators: Freestanding, steel, open-spring isolators with seismic or limit-stop restraint.

1. Housing: Steel with resilient vertical-limit stops to prevent spring extension due to weight being removed; factory-drilled baseplate bonded to ¼-inch-thick, neoprene or rubber isolator pad attached to baseplate underside; and adjustable equipment mounting and leveling bolt that acts as blocking during installation.
2. Restraint: Seismic or limit-stop as required for equipment and authorities having jurisdiction.
3. Outside Spring Diameter: Not less than eighty percent (80%) of the compressed height of the spring at rated load.
4. Minimum Additional Travel: Fifty percent (50%) of the required deflection at rated load.
5. Lateral Stiffness: More than eighty percent (80%) of rated vertical stiffness.
6. Overload Capacity: Support two hundred percent (200%) of rated load, fully compressed, without deformation or failure.

D. Housed Spring Mounts: Housed spring isolator with integral seismic snubbers.

1. Housing: Ductile-iron or steel housing to provide all-directional seismic restraint.
2. Base: Factory drilled for bolting to structure.
3. Snubbers: Vertically adjustable to allow a maximum of ¼-inch travel up or down before contacting a resilient collar.

E. Spring Hangers: Combination coil-spring and elastomeric-insert hanger with spring and insert in compression.

1. Frame: Steel, fabricated for connection to threaded hanger rods and to allow for a maximum of 30 degrees of angular hanger-rod misalignment without binding or reducing isolation efficiency.
2. Outside Spring Diameter: Not less than eighty percent (80%) of the compressed height of the spring at rated load.
3. Minimum Additional Travel: Fifty percent (50%) of the required deflection at rated load.
4. Lateral Stiffness: More than eighty percent (80%) of rated vertical stiffness.
5. Overload Capacity: Support two hundred percent (200%) of rated load, fully compressed, without deformation or failure.
6. Elastomeric Element: Molded, oil-resistant rubber or neoprene. Steel-washer-reinforced cup to support spring and bushing projecting through bottom of frame.
7. Self-centering hanger rod cap to ensure concentricity between hanger rod and support spring coil.

F. Pipe Riser Resilient Support: All-directional, acoustical pipe anchor consisting of two (2) steel tubes separated by a minimum of ½-inch-thick neoprene. Include steel and neoprene vertical-limit stops arranged to prevent vertical travel in both directions. Design support for a maximum load on the isolation material of 500 psig and for equal resistance in all directions.

G. Resilient Pipe Guides: Telescopic arrangement of two (2) steel tubes or post and sleeve arrangement separated by a minimum of ½-inch-thick neoprene. Where clearances are not readily visible, a factory-set guide height with a shear pin to allow vertical motion due to pipe expansion and contraction shall be fitted. Shear pin shall be removable and reinsertable to allow for selection of pipe movement. Guides shall be capable of motion to meet location requirements.

2.2 SEISMIC-RESTRAINT DEVICES

A. Manufacturers: Subject to compliance with requirements, provide products by one (1) of the following:

1. Cooper B-Line, Inc.; a division of Cooper Industries
2. Hilti, Inc.
3. Mason Industries
4. TOLCO Incorporated; a brand of NIBCO INC.
5. Unistrut; Tyco International, Ltd.

B. Snubbers: Factory fabricated using welded structural-steel shapes and plates, anchor bolts, and replaceable resilient isolation washers and bushings.

1. Anchor bolts for attaching to concrete shall be seismic-rated, drill-in, and stud-wedge or female-wedge type.
2. Resilient Isolation Washers and Bushings: Oil- and water-resistant neoprene.
3. Maximum ¼-inch air gap, and minimum ¼-inch-thick resilient cushion.

C. Channel Support System: MFMA-3, shop- or field-fabricated support assembly made of slotted steel channels with accessories for attachment to braced component at one (1) end and to building structure at the other end and other matching components and with corrosion-resistant coating; and rated in tension, compression, and torsion forces.

D. Restraint Cables: ASTM A 603 galvanized-steel cables with end connections made of steel assemblies with thimbles, brackets, swivel, and bolts designed for restraining cable service; and with a minimum of two (2) clamping bolts for cable engagement.

E. Hanger Rod Stiffener: Steel tube or steel slotted-support-system sleeve with internally bolted connections to hanger rod.

F. Bushings for Floor-Mounted Equipment Anchor Bolts: Neoprene bushings designed for rigid equipment mountings, and matched to type and size of anchor bolts and studs.

G. Bushing Assemblies for Wall-Mounted Equipment Anchorage: Assemblies of neoprene elements and steel sleeves designed for rigid equipment mountings, and matched to type and size of attachment devices used.

H. Resilient Isolation Washers and Bushings: One-piece, molded, oil- and water-resistant neoprene, with a flat washer face.

I. Mechanical Anchor Bolts: Drilled-in and stud-wedge or female-wedge type in zinc-coated steel for interior applications and stainless steel for exterior applications. Select anchor bolts with strength required for anchor and as tested according to ASTM E 488. Minimum length of eight (8) times diameter.

J. Adhesive Anchor Bolts: Drilled-in and capsule anchor system containing polyvinyl or urethane methacrylate-based resin and accelerator, or injected polymer or hybrid mortar adhesive. Provide anchor bolts and hardware with zinc-coated steel for interior applications and stainless steel for exterior applications. Select anchor bolts with strength required for anchor and as tested according to ASTM E 488.

2.3 FACTORY FINISHES

A. Finish: Manufacturer's standard paint applied to factory-assembled and -tested equipment before shipping.

1. Powder coating on springs and housings.
2. All hardware shall be galvanized. Hot-dip galvanize metal components for exterior use.
3. Baked enamel or powder coat for metal components on isolators for interior use.
4. Color-code or otherwise mark vibration isolation and seismic-control devices to indicate capacity range.

PART 3 - EXECUTION

3.1 EXAMINATION

A. Examine areas and equipment to receive vibration isolation and seismic-control devices for compliance with requirements for installation tolerances and other conditions affecting performance.

B. Examine roughing-in of reinforcement and cast-in-place anchors to verify actual locations before installation.

C. Proceed with installation only after unsatisfactory conditions have been corrected.

3.2 APPLICATIONS

A. Multiple Pipe Supports: Secure pipes to trapeze member with approved clamps.

B. Indicate on Drawings, by details, schedules, or a combination of both, the locations where hanger rods for individual pipes and hanger rods for trapeze hangers require hanger rod stiffeners.

C. Hanger Rod Stiffeners: Install hanger rod stiffeners where indicated or scheduled on Drawings to receive them and where required to prevent buckling of hanger rods due to seismic forces.

D. Strength of Support and Seismic-Restraint Assemblies: Where not indicated, select sizes of components so strength will be adequate to carry present and future static and seismic loads within specified loading limits.

3.3 VIBRATION-CONTROL AND SEISMIC-RESTRAINT DEVICE INSTALLATION

A. Equipment Seismic Restraints:

1. Install seismic equipment restraints in accordance with the requirements of the Connecticut State Building Code.

B. Piping Seismic Restraints:

1. Install seismic piping restraints in accordance with the requirements of the Connecticut State Building Code.

C. Install bushing assemblies for anchor bolts for floor-mounted equipment, arranged to provide resilient media between anchor bolt and mounting hole in concrete base.

D. Install bushing assemblies for mounting bolts for wall-mounted equipment, arranged to provide resilient media where equipment or equipment-mounting channels are attached to wall.

E. Attachment to Structure: If specific attachment is not indicated, anchor bracing to structure at flanges of beams, at upper truss chords of bar joists, or at concrete members.

F. Drilled-in Anchors:

1. Identify position of reinforcing steel and other embedded items prior to drilling holes for anchors. Do not damage existing reinforcing or embedded items during coring or drilling. Notify the structural engineer if reinforcing steel or other embedded items are encountered during drilling. Locate and avoid prestressed tendons, electrical and telecommunications conduit, and gas lines.
2. Do not drill holes in concrete or masonry until concrete, mortar, or grout has achieved full design strength.
3. Wedge Anchors: Protect threads from damage during anchor installation. Heavy-duty sleeve anchors shall be installed with sleeve fully engaged in the structural element to which anchor is to be fastened.

4. Adhesive Anchors: Clean holes to remove loose material and drilling dust prior to installation of adhesive. Place adhesive in holes proceeding from the bottom of the hole and progressing toward the surface in such a manner as to avoid introduction of air pockets in the adhesive.
5. Set anchors to manufacturer's recommended torque, using a torque wrench.
6. Install zinc-coated steel anchors for interior and stainless steel anchors for exterior applications.

3.4 ACCOMMODATION OF DIFFERENTIAL SEISMIC MOTION

A. Install flexible connections in piping where they cross seismic joints, where adjacent sections or branches are supported by different structural elements, and where the connections terminate with connection to equipment that is anchored to a different structural element from the one (1) supporting the connections as they approach equipment. Comply with requirements in Section 221116 "Domestic Water Piping" for piping flexible connections.

3.5 FIELD QUALITY CONTROL

A. Perform tests and inspections.

B. Tests and Inspections:

1. Provide evidence of recent calibration of test equipment by a testing agency acceptable to authorities having jurisdiction.
2. Schedule test with Owner, through Architect, before connecting anchorage device to restrained component (unless postconnection testing has been approved), and with at least seven (7) days advance notice.
3. Obtain Architect's approval before transmitting test loads to structure. Provide temporary load-spreading members.
4. Test at least four (4) of each type and size of installed anchors and fasteners selected by Architect.
5. Test to ninety percent (90%) of rated proof load of device.
6. Measure isolator restraint clearance.
7. Measure isolator deflection.
8. Verify snubber minimum clearances.
9. Air-Mounting System Leak Test: After installation, charge system and test for leaks. Repair leaks and retest until no leaks exist.
10. Air-Mounting System Operational Test: Test the compressed-air leveling system.
11. Test and adjust air-mounting system controls and safeties.
12. If a device fails test, modify all installations of same type and retest until satisfactory results are achieved.

C. Remove and replace malfunctioning units and retest as specified above.

D. Prepare test and inspection reports.

3.6 ADJUSTING

A. Adjust isolators after piping system is at operating weight.

B. Adjust limit stops on restrained spring isolators to mount equipment at normal operating height. After equipment installation is complete, adjust limit stops so they are out of contact during normal operation.

C. Adjust active height of sprint isolators.

D. Adjust restraints to permit free movement of equipment within normal mode of operation.

END OF SECTION 220548

SECTION 220553 - IDENTIFICATION FOR PLUMBING PIPING AND EQUIPMENT

PART 1 - GENERAL

1.1 RELATED DOCUMENTS

A. Drawings and general provisions of the Contract, including General and Supplementary Conditions and Division 01 Specification Sections, apply to this Section.

1.2 SUMMARY

A. Section Includes:

1. Equipment labels.
2. Warning signs and labels.
3. Pipe labels.
4. Valve tags.
5. Warning tags.

1.3 SUBMITTALS

A. Product Data: For each type of product indicated.

B. Samples: For color, letter style, and graphic representation required for each identification material and device.

C. Equipment Label Schedule: Include a listing of all equipment to be labeled with the proposed content for each label.

D. Valve numbering scheme.

E. Valve Schedules: For each piping system to include in maintenance manuals.

1.4 COORDINATION

A. Coordinate installation of identifying devices with completion of covering and painting of surfaces where devices are to be applied.

B. Coordinate installation of identifying devices with locations of access panels and doors.

C. Install identifying devices before installing acoustical ceilings and similar concealment.

PART 2 - PRODUCTS

2.1 EQUIPMENT LABELS

A. Plastic Labels for Equipment:

1. Material and Thickness: Multilayer, multicolor, plastic labels for mechanical engraving, 1/16 inch thick, and having predrilled holes for attachment hardware.
2. Letter Color: White
3. Background Color: Black.
4. Maximum Temperature: Able to withstand temperatures up to 160 deg F (71 deg C).
5. Minimum Label Size: Length and width vary for required label content, but not less than 2½ by ¾ inch.
6. Minimum Letter Size: ¼ inch for name of units if viewing distance is less than 24 inches, ½ inch for viewing distances up to 72 inches, and proportionately larger lettering for greater viewing distances. Include secondary lettering two-thirds to three-fourths the size of principal lettering.
7. Fasteners: Stainless-steel rivets or self-tapping screws.
8. Adhesive: Contact-type permanent adhesive, compatible with label and with substrate.

B. Label Content: Include equipment's Drawing designation or unique equipment number, Drawing numbers where equipment is indicated (plans, details, and schedules), plus the Specification Section number and title where equipment is specified.

C. Equipment Label Schedule: For each item of equipment to be labeled, on 8½-by-11-inch (A4) bond paper. Tabulate equipment identification number and identify Drawing numbers where equipment is indicated (plans, details, and schedules), plus the Specification Section number and title where equipment is specified. Equipment schedule shall be included in operation and maintenance data.

2.2 WARNING SIGNS AND LABELS

A. Material and Thickness: Multilayer, multicolor, plastic labels for mechanical engraving, 1/16 inch thick, and having predrilled holes for attachment hardware.

B. Letter Color: Black.

C. Background Color: Yellow.

D. Maximum Temperature: Able to withstand temperatures up to 160 deg F (71 deg C).

E. Minimum Label Size: Length and width vary for required label content, but not less than 2½ by ¾ inch.

F. Minimum Letter Size: ¼ inch for name of units if viewing distance is less than 24 inches, ½ inch for viewing distances up to 72 inches, and proportionately larger lettering for greater viewing distances. Include secondary lettering two-thirds to three-fourths the size of principal lettering.

G. Fasteners: Stainless-steel rivets or self-tapping screws.

H. Adhesive: Contact-type permanent adhesive, compatible with label and with substrate.

I. Label Content: Include caution and warning information, plus emergency notification instructions.

2.3 PIPE LABELS

A. General Requirements for Manufactured Pipe Labels: Preprinted, color-coded, with lettering indicating service, and showing flow direction.

B. Pretensioned Pipe Labels: Precoiled, semirigid plastic formed to cover full circumference of pipe and to attach to pipe without fasteners or adhesive.

C. Pipe Label Contents: Include identification of piping service using same designations or abbreviations as used on Drawings, pipe size, and an arrow indicating flow direction.

1. Flow-Direction Arrows: Integral with piping system service lettering to accommodate both directions, or as separate unit on each pipe label to indicate flow direction.
2. Lettering Size: At least 1½ inches high.

2.4 VALVE TAGS

A. Valve Tags: Stamped or engraved with ¼-inch letters for piping system abbreviation and ½-inch numbers.

1. Tag Material: Brass, 0.032-inch minimum thickness, and having predrilled or stamped holes for attachment hardware.
2. Fasteners: Brass wire-link or beaded chain; or S-hook.

B. Valve Schedules: For each piping system, on 8½-by-11-inch (A4) bond paper. Tabulate valve number, piping system, system abbreviation (as shown on valve tag), location of valve (room or space), normal-operating position (open, closed, or modulating), and variations for identification. Mark valves for emergency shutoff and similar special uses.

1. Valve-tag schedule shall be included in operation and maintenance data.

2.5 WARNING TAGS

A. Warning Tags: Preprinted or partially preprinted, accident-prevention tags, of plasticized card stock with matte finish suitable for writing.

1. Size: 3 by 5¼ inches minimum
2. Fasteners: Brass grommet and wire.
3. Nomenclature: Large-size primary caption such as "DANGER," "CAUTION," or "DO NOT OPERATE."
4. Color: Yellow background with black lettering.

PART 3 - EXECUTION

3.1 PREPARATION

A. Clean piping and equipment surfaces of substances that could impair bond of identification devices, including dirt, oil, grease, release agents, and incompatible primers, paints, and encapsulants.

3.2 EQUIPMENT LABEL INSTALLATION

A. Install or permanently fasten labels on each major item of mechanical equipment.

B. Locate equipment labels where accessible and visible.

3.3 PIPE LABEL INSTALLATION

A. Piping Color-Coding: Painting of piping is specified in Division 09 Sections

B. Locate pipe labels where piping is exposed or above accessible ceilings in finished spaces; machine rooms; accessible maintenance spaces such as shafts, tunnels, and plenums; and exterior exposed locations as follows:

1. Near each valve and control device.
2. Near each branch connection, excluding short takeoffs for fixtures and terminal units. Where flow pattern is not obvious, mark each pipe at branch.
3. Near penetrations through walls, floors, ceilings, and inaccessible enclosures.
4. At access doors, manholes, and similar access points that permit view of concealed piping.
5. Near major equipment items and other points of origination and termination.
6. Spaced at maximum intervals of 50 feet along each run. Reduce intervals to 25 feet in areas of congested piping and equipment.
7. On piping above removable acoustical ceilings. Omit intermediately spaced labels.

C. Pipe Label Colors:

1. For each pipe service provide label and lettering color in accordance with ANSI A13.1 for that pipe service.

3.4 VALVE-TAG INSTALLATION

A. Install tags on valves and control devices in piping systems, except check valves; valves within factory-fabricated equipment units; shutoff valves; faucets; convenience and lawn-watering hose connections; and similar roughing-in connections of end-use fixtures and units. List tagged valves in a valve schedule.

B. Valve-Tag Application Schedule: Tag valves according to size, shape, and color scheme and with captions similar to those indicated in the following subparagraphs:

1. Valve-Tag Size and Shape:

   a. Cold Water: 1½ inches round.
   b. Hot Water: 1½ inches round.
   c. Low Pressure Compressed Air: 1½ inches round.

2. Valve-Tag Color:

   a. Cold Water: Natural.
   b. Hot Water: Natural.
   c. Low Pressure Compressed Air: Natural

3. Letter Color:

   a. Cold Water: White.
   b. Hot Water: White.
   c. Low Pressure Compressed Air: Yellow

3.5 WARNING-TAG INSTALLATION

A. Write required message on, and attach warning tags to, equipment and other items where required.

END OF SECTION 220553

SECTION 220700 - PLUMBING INSULATION

PART 1 - GENERAL

1.1 RELATED DOCUMENTS

A. Drawings and general provisions of the Contract, including General and Supplementary Conditions and Division 01 Specification Sections, apply to this Section.

1.2 SUMMARY

A. Section Includes:

1. Insulation Materials:

   a. Mineral fiber.

2. Insulating cements.
3. Adhesives.
4. Mastics.
5. Lagging adhesives.
6. Sealants.
7. Factory-applied jackets.
8. Field-applied jackets.
9. Tapes.
10. Securements.
11. Corner angles.

1.3 SUBMITTALS

A. Product Data: For each type of product indicated. Include thermal conductivity, thickness, and jackets (both factory and field applied, if any).

B. Shop Drawings:

1. Detail application of protective shields, saddles, and inserts at hangers for each type of insulation and hanger.
2. Detail attachment and covering of heat tracing inside insulation.
3. Detail insulation application at pipe expansion joints for each type of insulation.
4. Detail insulation application at elbows, fittings, flanges, valves, and specialties for each type of insulation.
5. Detail removable insulation at piping specialties, equipment connections, and access panels.
6. Detail application of field-applied jackets.
7. Detail application at linkages of control devices.
8. Detail field application for each equipment type.

C. Samples: For each type of insulation and jacket indicated. Identify each Sample, describing product and intended use. Sample sizes are as follows:

1. Sample Sizes:

    a. Preformed Pipe Insulation Materials: 12 inches long by NPS 2 (DN 50).
    b. Sheet Form Insulation Materials: 12 inches square.
    c. Jacket Materials for Pipe: 12 inches long by NPS 2 (DN 50).
    d. Sheet Jacket Materials: 12 inches square.
    e. Manufacturer's Color Charts: For products where color is specified, show the full range of colors available for each type of finish material.

D. Qualification Data: For qualified Installer.

E. Material Test Reports: From a qualified testing agency acceptable to authorities having jurisdiction indicating, interpreting, and certifying test results for compliance of insulation materials, sealers, attachments, cements, and jackets, with requirements indicated. Include dates of tests and test methods employed.

F. Field quality-control reports.

1.4 QUALITY ASSURANCE

A. Installer Qualifications: Skilled mechanics who have successfully completed an apprenticeship program or another craft training program certified by the Department of Labor, Bureau of Apprenticeship and Training.

B. Fire-Test-Response Characteristics: Insulation and related materials shall have fire-test-response characteristics indicated, as determined by testing identical products per ASTM E 84, by a testing and inspecting agency acceptable to authorities having jurisdiction. Factory label insulation and jacket materials and adhesive, mastic, tapes, and cement material containers, with appropriate markings of applicable testing and inspecting agency.

    1. Insulation Installed Indoors: Flame-spread index of 25 or less, and smoke-developed index of 50 or less.
    2. Insulation Installed Outdoors: Flame-spread index of 75 or less, and smoke-developed index of 150 or less.

C. Mockups: Before installing insulation, build mockups for each type of insulation and finish listed below to demonstrate quality of insulation application and finishes. Build mockups in the location indicated or, if not indicated, as directed by Architect. Use materials indicated for the completed Work.

    1. Piping Mockups:

        a. One (1) 10-foot section of NPS 2 (DN 50) straight pipe.
        b. One (1) each of a 90-degree threaded, welded, and flanged elbow.
        c. One (1) each of a threaded, welded, and flanged tee fitting.
        d. One (1) NPS 2 (DN 50) or smaller valve, and one (1) NPS 2-1/2 (DN 65) or larger valve.
        e. Four (4) support hangers including hanger shield and insert.
        f. One (1) threaded strainer and one (1) flanged strainer with removable portion of insulation.
        g. One (1) threaded reducer and one (1) welded reducer.

h. One (1) pressure temperature tap.
i. One (1) mechanical coupling.

2. For each mockup, fabricate cutaway sections to allow observation of application details for insulation materials, adhesives, mastics, attachments, and jackets.
3. Notify Architect seven (7) days in advance of dates and times when mockups will be constructed.
4. Obtain Architect's approval of mockups before starting insulation application.
5. Approval of mockups does not constitute approval of deviations from the Contract Documents contained in mockups unless Architect specifically approves such deviations in writing.
6. Maintain mockups during construction in an undisturbed condition as a standard for judging the completed Work.
7. Demolish and remove mockups when directed.

1.5 DELIVERY, STORAGE, AND HANDLING

A. Packaging: Insulation material containers shall be marked by manufacturer with appropriate ASTM standard designation, type and grade, and maximum use temperature.

1.6 COORDINATION

A. Coordinate size and location of supports, hangers, and insulation shields specified in Section 220529 "Hangers and Supports for Plumbing Piping and Equipment."

B. Coordinate clearance requirements with piping Installer for piping insulation application and equipment Installer for equipment insulation application. Before preparing piping Shop Drawings, establish and maintain clearance requirements for installation of insulation and field-applied jackets and finishes and for space required for maintenance.

C. Coordinate installation and testing of heat tracing.

1.7 SCHEDULING

A. Schedule insulation application after pressure testing systems and, where required, after installing and testing heat tracing. Insulation application may begin on segments that have satisfactory test results.

B. Complete installation and concealment of plastic materials as rapidly as possible in each area of construction.

PART 2 - PRODUCTS

2.1 INSULATION MATERIALS

A. Comply with requirements in Part 3 schedule articles for where insulating materials shall be applied.

B. Products shall not contain asbestos, lead, mercury, or mercury compounds.

C. Products that come in contact with stainless steel shall have a leachable chloride content of less than 50 ppm when tested according to ASTM C 871.

D. Insulation materials for use on austenitic stainless steel shall be qualified as acceptable according to ASTM C 795.

E. Mineral-Fiber, Preformed Pipe Insulation:

1. Products: Subject to compliance with requirements, provide the following:

a. Fibrex Insulations Inc.; **Coreplus 1200**
b. Johns Manville; **Micro-Lok**
c. Knauf Insulation; **1000 Pipe Insulation**
d. Manson Insulation Inc.; **Alley-K**
e. Owens Corning; **Fiberglas Pipe Insulation**

2. Type I, 850 deg F (454 deg C) Materials: Mineral or glass fibers bonded with a thermosetting resin. Comply with ASTM C 547, Type I, Grade A, with factory-applied ASJ. Factory-applied jacket requirements are specified in "Factory-Applied Jackets" Article.

2.2 INSULATING CEMENTS

A. Mineral-Fiber Insulating Cement: Comply with ASTM C 195.

1. Products: Subject to compliance with requirements, provide one (1) of the following:

a. Insulco, Division of MFS, Inc.; **Triple I**
b. P. K. Insulation Mfg. Co., Inc.; **Super-Stik**

B. Expanded or Exfoliated Vermiculite Insulating Cement: Comply with ASTM C 196.

1. Products: Subject to compliance with requirements, provide the following:

a. P. K. Insulation Mfg. Co., Inc.; **Thermal-V-Kote**

C. Mineral-Fiber, Hydraulic-Setting Insulating and Finishing Cement: Comply with ASTM C 449.

1. Products: Subject to compliance with requirements, provide one (1) of the following:

a. Insulco, Division of MFS, Inc.; **SmoothKote**
b. P. K. Insulation Mfg. Co., Inc.; **PK No. 127** and **Quik-Cote**
c. Rock Wool Manufacturing Company; **Delta One Shot**

2.3 ADHESIVES

A. Materials shall be compatible with insulation materials, jackets, and substrates and for bonding insulation to itself and to surfaces to be insulated, unless otherwise indicated.

B. Mineral-Fiber Adhesive: Comply with MIL-A-3316C, Class 2, Grade A.

1. Products: Subject to compliance with requirements, provide one (1) of the following:

a. Childers Products, Division of ITW; **CP-82**
b. Foster Products Corporation, H. B. Fuller Company; **85-20**
c. ITW TACC, Division of Illinois Tool Works; **S-90/80**
d. Marathon Industries, Inc.; **225**
e. Mon-Eco Industries, Inc.; **22-25**

2. For indoor applications, use adhesive that has a VOC content of 80 g/L or less when calculated according to 40 CFR 59, Subpart D (EPA Method 24).

C. ASJ Adhesive, and FSK and PVDC Jacket Adhesive: Comply with MIL-A-3316C, Class 2, Grade A for bonding insulation jacket lap seams and joints.

1. Products: Subject to compliance with requirements, provide one (1) of the following:

a. Childers Products, Division of ITW; **CP-82**
b. Foster Products Corporation, H. B. Fuller Company; **85-20**
c. ITW TACC, Division of Illinois Tool Works; **S-90/80**
d. Marathon Industries, Inc.; **225**
e. Mon-Eco Industries, Inc.; **22-25**

2. For indoor applications, use adhesive that has a VOC content of 50 g/L or less when calculated according to 40 CFR 59, Subpart D (EPA Method 24).

D. PVC Jacket Adhesive: Compatible with PVC jacket.

1. Products: Subject to compliance with requirements, provide one (1) of the following**:**

a. Dow Chemical Company (The); **739, Dow Silicone**
b. Johns-Manville; **Zeston Perma-Weld, CEEL-TITE Solvent Welding Adhesive**
c. P.I.C. Plastics, Inc.; **Welding Adhesive**
d. Speedline Corporation; **Speedline Vinyl Adhesive**

2. For indoor applications, use adhesive that has a VOC content of 50 g/L or less when calculated according to 40 CFR 59, Subpart D (EPA Method 24).

2.4 MASTICS

A. Materials shall be compatible with insulation materials, jackets, and substrates; comply with MIL-C-19565C, Type II.

1. For indoor applications, use mastics that have a VOC content of 50 g/L or less when calculated according to 40 CFR 59, Subpart D (EPA Method 24).

B. Vapor-Barrier Mastic: Water based; suitable for indoor and outdoor use on below ambient services.

1. Products: Subject to compliance with requirements, provide one (1) of the following:

a. Childers Products, Division of ITW; **CP-35**
b. Foster Products Corporation, H. B. Fuller Company; **30-90**
c. ITW TACC, Division of Illinois Tool Works; **CB-50**

d. Marathon Industries, Inc.; **590**
e. Mon-Eco Industries, Inc.; **55-40**
f. Vimasco Corporation; **749**

2. Water-Vapor Permeance: ASTM E 96, Procedure B, 0.013 perm at 43-mil dry film thickness.
3. Service Temperature Range: Minus 20 to plus 180 deg F (Minus 29 to plus 82 deg C).
4. Solids Content: ASTM D 1644, fifty-nine percent (59%) by volume and seventy-one percent (71%) by weight.
5. Color: White.

C. Breather Mastic: Water based; suitable for indoor and outdoor use on above ambient services.

1. Products: Subject to compliance with requirements, provide one (1) of the following:

a. Childers Products, Division of ITW; **CP-10**
b. Foster Products Corporation, H. B. Fuller Company; **35-00**
c. ITW TACC, Division of Illinois Tool Works; **CB-05/15**
d. Marathon Industries, Inc.; **550**
e. Mon-Eco Industries, Inc.; **55-50**
f. Vimasco Corporation; **WC-1/WC-5**

2. Water-Vapor Permeance: ASTM F 1249, 3 perms at 0.0625-inch dry film thickness.
3. Service Temperature Range: Minus 20 to plus 200 deg F (Minus 29 to plus 93 deg C).
4. Solids Content: Sixty-three percent (63%) by volume and seventy-three percent (73%) by weight.
5. Color: White.

2.5 LAGGING ADHESIVES

A. Description: Comply with MIL-A-3316C, Class I, Grade A, and shall be compatible with insulation materials, jackets, and substrates.

1. For indoor applications, use lagging adhesives that have a VOC content of 50 g/L or less when calculated according to 40 CFR 59, Subpart D (EPA Method 24).
2. Products: Subject to compliance with requirements, provide one (1) of the following:

a. Childers Products, Division of ITW; **CP-52**
b. Foster Products Corporation, H. B. Fuller Company; **81-42**
c. Marathon Industries, Inc.; **130**
d. Mon-Eco Industries, Inc.; **11-30**
e. Vimasco Corporation; **136**

3. Fire-resistant, water-based lagging adhesive and coating for use indoors to adhere fire-resistant lagging cloths over equipment and pipe insulation.
4. Service Temperature Range: Minus 50 to plus 180 deg F (Minus 46 to plus 82 deg C).
5. Color: White.

2.6 SEALANTS

A. Joint Sealants:

B. ASJ Flashing Sealants, and Vinyl, PVDC, and PVC Jacket Flashing Sealants:

1. Products: Subject to compliance with requirements, provide one (1) of the following:

a. Childers Products, Division of ITW; **CP-76**

2. Materials shall be compatible with insulation materials, jackets, and substrates.
3. Fire- and water-resistant, flexible, elastomeric sealant.
4. Service Temperature Range: Minus 40 to plus 250 deg F (Minus 40 to plus 121 deg C).
5. Color: White.
6. For indoor applications, use sealants that have a VOC content of 250 g/L or less when calculated according to 40 CFR 59, Subpart D (EPA Method 24).

2.7 FACTORY-APPLIED JACKETS

A. Insulation system schedules indicate factory-applied jackets on various applications. When factory-applied jackets are indicated, comply with the following:

1. ASJ: White, Kraft-paper, fiberglass-reinforced scrim with aluminum-foil backing; complying with ASTM C 1136, Type I.

2.8 FIELD-APPLIED JACKETS

A. Field-applied jackets shall comply with ASTM C 921, Type I, unless otherwise indicated.

B. PVC Jacket: High-impact-resistant, UV-resistant PVC complying with ASTM D 1784, Class 16354-C; thickness as scheduled; roll stock ready for shop or field cutting and forming. Thickness is indicated in field-applied jacket schedules.

1. Products: Subject to compliance with requirements, provide one (1) of the following:

a. Johns Manville; **Zeston**
b. P.I.C. Plastics, Inc.; **FG Series**
c. Proto PVC Corporation; **LoSmoke**
d. Speedline Corporation; **SmokeSafe**

2. Adhesive: As recommended by jacket material manufacturer.
3. Color: White
4. Factory-fabricated fitting covers to match jacket if available; otherwise, field fabricate.

a. Shapes: 45- and 90-degree, short- and long-radius elbows, tees, valves, flanges, unions, reducers, end caps, soil-pipe hubs, traps, mechanical joints, and P-trap and supply covers for lavatories.

2.9 TAPES

A. ASJ Tape: White vapor-retarder tape matching factory-applied jacket with acrylic adhesive, complying with ASTM C 1136.

1. Products: Subject to compliance with requirements, provide one (1) of the following:

a. Avery Dennison Corporation, Specialty Tapes Division; **Fasson 0835**

b. Compac Corp.; **104 and 105**
c. Ideal Tape Co., Inc., an American Biltrite Company; **428 AWF ASJ**
d. Venture Tape; **1540 CW Plus, 1542 CW Plus, and 1542 CW Plus/SQ**

2. Width: 3 inches.
3. Thickness: 11.5 mils.
4. Adhesion: 90 ounces force/inch in width.
5. Elongation: Two percent (2%).
6. Tensile Strength: 40 lbf/inch in width.
7. ASJ Tape Disks and Squares: Precut disks or squares of ASJ tape.

B. PVC Tape: White vapor-retarder tape matching field-applied PVC jacket with acrylic adhesive. Suitable for indoor and outdoor applications.

1. Products: Subject to compliance with requirements, provide one (1) of the following:

a. Avery Dennison Corporation, Specialty Tapes Division; **Fasson 0555**
b. Compac Corp.; **130**
c. Ideal Tape Co., Inc., an American Biltrite Company; **370 White PVC tape**
d. Venture Tape; **1506 CW NS**

2. Width: 2 inches.
3. Thickness: 6 mils.
4. Adhesion: 64 ounces force/inch in width.
5. Elongation: Five hundred percent (500%).
6. Tensile Strength: 18 lbf/inch in width.

2.10 SECUREMENTS

A. Bands:

1. Products: Subject to compliance with requirements, provide one (1) of the following:

a. Childers Products; **Bands**
b. PABCO Metals Corporation; **Bands**
c. RPR Products, Inc.; **Bands**

2. Stainless Steel: ASTM A 167 or ASTM A 240, Type 304, ¾ inch wide with wing or closed seal.
3. Aluminum: ASTM B 209, Alloy 3003, 3005, 3105, or 5005; Temper H-14, 0.020 inch thick, ¾ inch wide with wing or closed seal.
4. Springs: Twin spring set constructed of stainless steel with ends flat and slotted to accept metal bands. Spring size determined by manufacturer for application.

B. Staples: Outward-clinching insulation staples, nominal ¾-inch-wide, stainless steel or Monel.

C. Wire: 0.080-inch nickel-copper alloy; 0.062-inch soft-annealed, stainless steel; or 0.062-inch soft-annealed, galvanized steel.

1. Manufacturers: Subject to compliance with requirements, provide products by one (1) of the following:

a. C & F Wire
b. Childers Products
c. PABCO Metals Corporation
d. RPR Products, Inc.

2.11 CORNER ANGLES

A. PVC Corner Angles: 30 mils thick, minimum 1 by 1 inch, PVC according to ASTM D 1784, Class 16354-C. White or color-coded to match adjacent surface.

PART 3 - EXECUTION

3.1 EXAMINATION

A. Examine substrates and conditions for compliance with requirements for installation and other conditions affecting performance of insulation application.

1. Verify that systems and equipment to be insulated have been tested and are free of defects.
2. Verify that surfaces to be insulated are clean and dry.
3. Proceed with installation only after unsatisfactory conditions have been corrected.

3.2 PREPARATION

A. Surface Preparation: Clean and dry surfaces to receive insulation. Remove materials that will adversely affect insulation application.

B. Surface Preparation: Clean and prepare surfaces to be insulated. Before insulating, apply a corrosion coating to insulated surfaces as follows:

1. Stainless Steel: Coat 300 series stainless steel with an epoxy primer 5 mils thick and an epoxy finish 5 mils thick if operating in a temperature range between 140 and 300 deg F (60 and 149 deg C). Consult coating manufacturer for appropriate coating materials and application methods for operating temperature range.
2. Carbon Steel: Coat carbon steel operating at a service temperature between 32 and 300 deg F (0 and 149 deg C) with an epoxy coating. Consult coating manufacturer for appropriate coating materials and application methods for operating temperature range.

C. Mix insulating cements with clean potable water; if insulating cements are to be in contact with stainless-steel surfaces, use demineralized water.

3.3 GENERAL INSTALLATION REQUIREMENTS

A. Install insulation materials, accessories, and finishes with smooth, straight, and even surfaces; free of voids throughout the length of equipment and piping including fittings, valves, and specialties.

B. Install insulation materials, forms, vapor barriers or retarders, jackets, and thicknesses required for each item of equipment and pipe system as specified in insulation system schedules.

C. Install accessories compatible with insulation materials and suitable for the service. Install accessories that do not corrode, soften, or otherwise attack insulation or jacket in either wet or dry state.

D. Install insulation with longitudinal seams at top and bottom of horizontal runs.

E. Install multiple layers of insulation with longitudinal and end seams staggered.

F. Do not weld brackets, clips, or other attachment devices to piping, fittings, and specialties.

G. Keep insulation materials dry during application and finishing.

H. Install insulation with tight longitudinal seams and end joints. Bond seams and joints with adhesive recommended by insulation material manufacturer.

I. Install insulation with least number of joints practical.

J. Where vapor barrier is indicated, seal joints, seams, and penetrations in insulation at hangers, supports, anchors, and other projections with vapor-barrier mastic.

1. Install insulation continuously through hangers and around anchor attachments.
2. For insulation application where vapor barriers are indicated, extend insulation on anchor legs from point of attachment to supported item to point of attachment to structure. Taper and seal ends at attachment to structure with vapor-barrier mastic.
3. Install insert materials and install insulation to tightly join the insert. Seal insulation to insulation inserts with adhesive or sealing compound recommended by insulation material manufacturer.
4. Cover inserts with jacket material matching adjacent pipe insulation. Install shields over jacket, arranged to protect jacket from tear or puncture by hanger, support, and shield.

K. Apply adhesives, mastics, and sealants at manufacturer's recommended coverage rate and wet and dry film thicknesses.

L. Install insulation with factory-applied jackets as follows:

1. Draw jacket tight and smooth.
2. Cover circumferential joints with 3-inch-wide strips, of same material as insulation jacket. Secure strips with adhesive and outward clinching staples along both edges of strip, spaced 4 inches o.c.
3. Overlap jacket longitudinal seams at least 1½ inches. Install insulation with longitudinal seams at bottom of pipe. Clean and dry surface to receive self-sealing lap. Staple laps with outward clinching staples along edge at 2 inches o.c.

   a. For below ambient services, apply vapor-barrier mastic over staples.

4. Cover joints and seams with tape as recommended by insulation material manufacturer to maintain vapor seal.
5. Where vapor barriers are indicated, apply vapor-barrier mastic on seams and joints and at ends adjacent to pipe flanges and fittings.

M. Cut insulation in a manner to avoid compressing insulation more than seventy-five percent (75%) of its nominal thickness.

N. Finish installation with systems at operating conditions. Repair joint separations and cracking due to thermal movement.

O. Repair damaged insulation facings by applying same facing material over damaged areas. Extend patches at least 4 inches beyond damaged areas. Adhere, staple, and seal patches similar to butt joints.

P. For above ambient services, do not install insulation to the following:

1. Vibration-control devices.
2. Testing agency labels and stamps.
3. Nameplates and data plates.
4. Manholes.
5. Handholes.
6. Cleanouts.

3.4 PENETRATIONS

A. Insulation Installation at Roof Penetrations: Install insulation continuously through roof penetrations.

1. Seal penetrations with flashing sealant.
2. For applications requiring only indoor insulation, terminate insulation above roof surface and seal with joint sealant. For applications requiring indoor and outdoor insulation, install insulation for outdoor applications tightly joined to indoor insulation ends. Seal joint with joint sealant.
3. Extend jacket of outdoor insulation outside roof flashing at least 2 inches below top of roof flashing.
4. Seal jacket to roof flashing with flashing sealant.

B. Insulation Installation at Underground Exterior Wall Penetrations: Terminate insulation flush with sleeve seal. Seal terminations with flashing sealant.

C. Insulation Installation at Aboveground Exterior Wall Penetrations: Install insulation continuously through wall penetrations.

1. Seal penetrations with flashing sealant.
2. For applications requiring only indoor insulation, terminate insulation inside wall surface and seal with joint sealant. For applications requiring indoor and outdoor insulation, install insulation for outdoor applications tightly joined to indoor insulation ends. Seal joint with joint sealant.
3. Extend jacket of outdoor insulation outside wall flashing and overlap wall flashing at least 2 inches.
4. Seal jacket to wall flashing with flashing sealant.

D. Insulation Installation at Interior Wall and Partition Penetrations (That Are Not Fire Rated): Install insulation continuously through walls and partitions.

E. Insulation Installation at Fire-Rated Wall and Partition Penetrations: Install insulation continuously through penetrations of fire-rated walls and partitions.

1. Comply with requirements in Section 078413 "Penetration Firestopping" for firestopping and fire-resistive joint sealers.

F. Insulation Installation at Floor Penetrations:

1. Pipe: Install insulation continuously through floor penetrations.
2. Seal penetrations through fire-rated assemblies. Comply with requirements in Section 078413 "Penetration Firestopping."

3.5 GENERAL PIPE INSULATION INSTALLATION

A. Requirements in this article generally apply to all insulation materials except where more specific requirements are specified in various pipe insulation material installation articles.

B. Insulation Installation on Fittings, Valves, Strainers, Flanges, and Unions:

1. Install insulation over fittings, valves, strainers, flanges, unions, and other specialties with continuous thermal and vapor-retarder integrity, unless otherwise indicated.
2. Insulate pipe elbows using preformed fitting insulation or mitered fittings made from same material and density as adjacent pipe insulation. Each piece shall be butted tightly against adjoining piece and bonded with adhesive. Fill joints, seams, voids, and irregular surfaces with insulating cement finished to a smooth, hard, and uniform contour that is uniform with adjoining pipe insulation.
3. Insulate tee fittings with preformed fitting insulation or sectional pipe insulation of same material and thickness as used for adjacent pipe. Cut sectional pipe insulation to fit. Butt each section closely to the next and hold in place with tie wire. Bond pieces with adhesive.
4. Insulate valves using preformed fitting insulation or sectional pipe insulation of same material, density, and thickness as used for adjacent pipe. Overlap adjoining pipe insulation by not less than two (2) times the thickness of pipe insulation, or one (1) pipe diameter, whichever is thicker. For valves, insulate up to and including the bonnets, valve stuffing-box studs, bolts, and nuts. Fill joints, seams, and irregular surfaces with insulating cement.
5. Insulate strainers using preformed fitting insulation or sectional pipe insulation of same material, density, and thickness as used for adjacent pipe. Overlap adjoining pipe insulation by not less than two (2) times the thickness of pipe insulation, or one (1) pipe diameter, whichever is thicker. Fill joints, seams, and irregular surfaces with insulating cement. Insulate strainers so strainer basket flange or plug can be easily removed and replaced without damaging the insulation and jacket. Provide a removable reusable insulation cover. For below ambient services, provide a design that maintains vapor barrier.
6. Insulate flanges and unions using a section of oversized preformed pipe insulation. Overlap adjoining pipe insulation by not less than two (2) times the thickness of pipe insulation, or one (1) pipe diameter, whichever is thicker.
7. Cover segmented insulated surfaces with a layer of finishing cement and coat with a mastic. Install vapor-barrier mastic for below ambient services and a breather mastic for above ambient services. Reinforce the mastic with fabric-reinforcing mesh. Trowel the mastic to a smooth and well-shaped contour.

8. For services not specified to receive a field-applied jacket except for flexible elastomeric and polyolefin, install fitted PVC cover over elbows, tees, strainers, valves, flanges, and unions. Terminate ends with PVC end caps. Tape PVC covers to adjoining insulation facing using PVC tape.
9. Stencil or label the outside insulation jacket of each union with the word "UNION." Match size and color of pipe labels.

C. Insulate instrument connections for thermometers, pressure gages, pressure temperature taps, test connections, flow meters, sensors, switches, and transmitters on insulated pipes, vessels, and equipment. Shape insulation at these connections by tapering it to and around the connection with insulating cement and finish with finishing cement, mastic, and flashing sealant.

D. Install removable insulation covers at locations indicated. Installation shall conform to the following:

1. Make removable flange and union insulation from sectional pipe insulation of same thickness as that on adjoining pipe. Install same insulation jacket as adjoining pipe insulation.
2. When flange and union covers are made from sectional pipe insulation, extend insulation from flanges or union long at least two (2) times the insulation thickness over adjacent pipe insulation on each side of flange or union. Secure flange cover in place with stainless-steel or aluminum bands. Select band material compatible with insulation and jacket.
3. Construct removable valve insulation covers in same manner as for flanges except divide the two-part section on the vertical center line of valve body.
4. When covers are made from block insulation, make two (2) halves, each consisting of mitered blocks wired to stainless-steel fabric. Secure this wire frame, with its attached insulation, to flanges with tie wire. Extend insulation at least 2 inches over adjacent pipe insulation on each side of valve. Fill space between flange or union cover and pipe insulation with insulating cement. Finish cover assembly with insulating cement applied in two (2) coats. After first coat is dry, apply and trowel second coat to a smooth finish.
5. Unless a PVC jacket is indicated in field-applied jacket schedules, finish exposed surfaces with a metal jacket.

3.6 MINERAL-FIBER INSULATION INSTALLATION

A. Insulation Installation on Straight Pipes and Tubes:

1. Secure each layer of preformed pipe insulation to pipe with wire or bands and tighten bands without deforming insulation materials.
2. Where vapor barriers are indicated, seal longitudinal seams, end joints, and protrusions with vapor-barrier mastic and joint sealant.
3. For insulation with factory-applied jackets on above ambient surfaces, secure laps with outward clinched staples at 6 inches o.c.
4. For insulation with factory-applied jackets on below ambient surfaces, do not staple longitudinal tabs but secure tabs with additional adhesive as recommended by insulation material manufacturer and seal with vapor-barrier mastic and flashing sealant.

B. Insulation Installation on Pipe Flanges:

1. Install preformed pipe insulation to outer diameter of pipe flange.
2. Make width of insulation section same as overall width of flange and bolts, plus twice the thickness of pipe insulation.
3. Fill voids between inner circumference of flange insulation and outer circumference of adjacent straight pipe segments with mineral-fiber blanket insulation.
4. Install jacket material with manufacturer's recommended adhesive, overlap seams at least 1 inch, and seal joints with flashing sealant.

C. Insulation Installation on Pipe Fittings and Elbows:

1. Install preformed sections of same material as straight segments of pipe insulation when available.
2. When preformed insulation elbows and fittings are not available, install mitered sections of pipe insulation, to a thickness equal to adjoining pipe insulation. Secure insulation materials with wire or bands.

D. Insulation Installation on Valves and Pipe Specialties:

1. Install preformed sections of same material as straight segments of pipe insulation when available.
2. When preformed sections are not available, install mitered sections of pipe insulation to valve body.
3. Arrange insulation to permit access to packing and to allow valve operation without disturbing insulation.
4. Install insulation to flanges as specified for flange insulation application.

3.7 FIELD-APPLIED JACKET INSTALLATION

A. Where PVC jackets are indicated, install with 1-inch overlap at longitudinal seams and end joints; for horizontal applications, install with longitudinal seams along top and bottom of tanks and vessels. Seal with manufacturer's recommended adhesive.

1. Apply two (2) continuous beads of adhesive to seams and joints, one (1) bead under lap and the finish bead along seam and joint edge.

3.8 FINISHES

A. Equipment and Pipe Insulation with ASJ, Glass-Cloth, or Other Paintable Jacket Material: Paint jacket with paint system identified below and as specified in Division 09 painting Sections.

1. Flat Acrylic Finish: Two (2) finish coats over a primer that is compatible with jacket material and finish coat paint. Add fungicidal agent to render fabric mildew proof.

a. Finish Coat Material: Interior, flat, latex-emulsion size.

B. Color: Final color as selected by Architect. Vary first and second coats to allow visual inspection of the completed Work.

C. Do not field paint aluminum or stainless-steel jackets.

3.9 FIELD QUALITY CONTROL

A. Perform tests and inspections.

B. Tests and Inspections:

1. Inspect pipe, fittings, strainers, and valves, randomly selected by Architect, by removing field-applied jacket and insulation in layers in reverse order of their installation. Extent of inspection shall be limited to three (3) locations of straight pipe, three (3) locations of threaded fittings, three (3) locations of welded fittings, two (2) locations of threaded strainers, two (2) locations of welded strainers, three (3) locations of threaded valves, and three (3) locations of flanged valves for each pipe service defined in the "Piping Insulation Schedule, General" Article.

C. All insulation applications will be considered defective Work if sample inspection reveals noncompliance with requirements.

3.10 PIPING INSULATION SCHEDULE, GENERAL

A. Acceptable preformed pipe and tubular insulation materials and thicknesses are identified for each piping system and pipe size range. If more than one (1) material is listed for a piping system, selection from materials listed is Contractor's option.

B. Items Not Insulated: Unless otherwise indicated, do not install insulation on the following:

1. Drainage piping located in crawl spaces.
2. Underground piping.
3. Chrome-plated pipes and fittings unless there is a potential for personal injury.

3.11 INDOOR PIPING INSULATION SCHEDULE

A. Domestic Cold Water:

1. NPS 1 (DN 25) and Smaller: Insulation shall be the following:

a. Mineral-Fiber, Preformed Pipe Insulation, Type I: 1 inch thick.

2. NPS 1-1/4 (DN 32) and Larger: Insulation shall be the following:

a. Mineral-Fiber, Preformed Pipe Insulation, Type I: 1 inch thick.

B. Domestic Hot and Recirculated Hot Water:

1. NPS 1-1/4 (DN 32) and Smaller: Insulation shall be the following:

a. Mineral-Fiber, Preformed Pipe Insulation, Type I: 1½ inches thick.
b. Exception: 1 inch or smaller drops in walls: Mineral-Fiber, Preformed Pipe Insulation, Type I: 1 inch thick.

2. NPS 1-1/2 (DN 40) and Larger: Insulation shall be the following:
a. Mineral-Fiber, Preformed Pipe Insulation, Type I: 1½ inches thick.

C. Stormwater and Overflow, above slab:

1. All Pipe Sizes: Insulation shall be the following:

a. Mineral-Fiber, Preformed Pipe Insulation, Type I: 1 inch thick.

D. Roof Drain and Overflow Drain Bodies:

1. All Pipe Sizes: Insulation shall be the following:

a. Mineral-Fiber, Preformed Pipe Insulation, Type I: 1 inch thick.

E. Exposed Sanitary Drains, Domestic Water, Domestic Hot Water, and Stops for Plumbing Fixtures for People with Disabilities, when plastic pipe enclosure is not provided:

1. All Pipe Sizes: Insulation shall be the following:

a. ASTM E 84 compliant pipe insulation kit.

F. Condensate and Equipment Drain Water below 60 Deg F (16 Deg C):

1. All Pipe Sizes: Insulation shall be the following:

a. Mineral-Fiber, Preformed Pipe Insulation, Type I: 1 inch thick.

G. Hot Service Drains and Vents:

1. All Pipe Sizes: Insulation shall be the following:

a. Mineral-Fiber, Preformed Pipe Insulation, Type I or II: 1 inch thick.

3.12 INDOOR, FIELD-APPLIED JACKET SCHEDULE

A. Install jacket over insulation material. For insulation with factory-applied jacket, install the field-applied jacket over the factory-applied jacket.

B. If more than one (1) material is listed, selection from materials listed is Contractor's option.

C. Piping, Concealed:

1. None.

D. Piping, Exposed:

1. None, Except Mechanical Rooms
2. At Mechanical Rooms: PVC: 20 mils thick.

END OF SECTION 220700

SECTION 221116 - DOMESTIC WATER PIPING

PART 1 - GENERAL

1.1 RELATED DOCUMENTS

A. Drawings and general provisions of the Contract, including General and Supplementary Conditions and Division 01 Specification Sections, apply to this Section.

1.2 SUMMARY

A. Section Includes:

1. Under-building slab and aboveground domestic water pipes, tubes, fittings, and specialties inside the building.
2. Specialty valves.
3. Flexible connectors.

1.3 PERFORMANCE REQUIREMENTS

A. Seismic Performance: Domestic water piping and support and installation shall withstand effects of earthquake motions determined according to the State of Connecticut Building Code.

All products coming in contact with potable water systems shall be NSF 372 Lead-Free ANSI 3rd Party Certified, except for products specifically exempted from such certification by NSF 372. Where such NSF 372 Lead-Free requirement is in conflict with any specification in the contract documents for product(s) coming in contact with potable water, NSF 372 compliance shall take precedence, and the cost for NSF 372 compliant product(s) shall be carried in the Base Bid.

1.4 SUBMITTALS

A. Product Data: For the following products:

1. Specialty valves.
2. Transition fittings.
3. Dielectric fittings.
4. Flexible connectors.
5. Pipe and fittings
6. Solder and flux

B. Water Samples: Specified in "Cleaning" Article.

C. Coordination Drawings: For piping in equipment rooms and other congested areas, drawn to scale, on which the following items are shown and coordinated with each other, using input from Installers of the items involved:

1. Fire-suppression-water piping.
2. Domestic water piping.
3. Fuel gas piping.
4. HVAC hydronic piping.
5. HVAC Ductwork
6. Combustion Air and Exhaust Piping
7. Flues, breechings

D. Field quality-control reports.

1.5 QUALITY ASSURANCE

A. Piping materials shall bear label, stamp, or other markings of specified testing agency.

B. Comply with NSF 14 for plastic, potable domestic water piping and components. Include marking "NSF-pw" on piping.

C. Comply with NSF 61 and NSF 372 for potable domestic water piping and components.

1.6 PROJECT CONDITIONS

A. Interruption of Existing Water Service: Do not interrupt water service to facilities occupied by Owner or others unless permitted under the following conditions and then only after arranging to provide temporary water service according to requirements indicated:

1. Notify Construction Manager no fewer than seven days in advance of proposed interruption of water service.
2. Do not proceed with interruption of water service without Construction Manager's written permission.

1.7 COORDINATION

A. Coordinate sizes and locations of concrete bases with actual equipment provided.

PART 2 - PRODUCTS

2.1 PIPING MATERIALS

A. Comply with requirements in "Piping Schedule" Article for applications of pipe, tube, fitting materials, and joining methods for specific services, service locations, and pipe sizes.

2.2 COPPER TUBE AND FITTINGS

A. Hard Copper Tube: ASTM B 88, Type L water tube, drawn temper.

1. Cast-Copper Solder-Joint Fittings: ASME B16.18, pressure fittings, with NSF Lead-Free solder-joint ends.
2. Wrought-Copper Solder-Joint Fittings: ASME B16.22, wrought-copper pressure fittings, with NSF 372 Lead-Free solder-joint ends.
3. Bronze Flanges: ASME B16.24, Class 150, with NSF 372 Lead-Free solder-joint ends.
4. Copper Pressure-Seal-Joint Fittings:
   a. Manufacturers: Subject to compliance with requirements provide products by one of the following:
      1) Elkhart Products Corporation.
      2) NIBCO Inc.
      3) Viega.
   b. Fittings for NPS 1-1/4 (DN 32) and Smaller: Wrought-copper fitting with EPDM-rubber, O-ring seal in each end.

5. Copper Unions: MSS SP-123, cast-copper-alloy, hexagonal-stock body, with ball-and-socket, metal-to-metal seating surfaces, and NSF 372 Lead-Free solder-joint or threaded ends.

B. Soft Copper Tube: ASTM B 88, Type K water tube, annealed temper.

1. Copper Solder-Joint Fittings: ASME B16.22, wrought-copper pressure fittings, NSF 372 Lead-Free solder-joint ends
2. NOTE: No fittings are allowed below slab on grade.

2.3 PLASTIC TUBE AND FITTINGS

A. Cross-Linked Polyethylene (PEX) Plastic Tubing, ASTM F 877.

1. Fittings for PEX Tube: ASTM F 1807, metal-insert type with copper or stainless-steel crimp rings and matching PEX tube dimensions. Fitting shall be IPC-accepted for installation with the piping material, and conforming to the requirements of the IPC, the respective pipe standard and NSF 61.

2.4 PIPING JOINING MATERIALS

A. Solder Filler Metals: ASTM B 32, lead-free alloys, NSF 372 Lead-Free. Include water-flushable flux according to ASTM B 813. Include water-washable flux according to ASTM B 813, NSF 372 Lead-Free.

B. Brazing Filler Metals: AWS A5.8, BCuP Series, NSF 372 Lead-Free copper-phosphorus alloys for general-duty brazing unless otherwise indicated.

2.5 VALVES

A. All domestic water valves shall be NSF 372 Lead-Free bronze (dezincification-resistant). Comply with requirements in Division 22 Section "General-Duty Valves for Plumbing Piping" for general-duty metal valves.

B. Comply with requirements in Division 22 Section "Domestic Water Piping Specialties" for balancing valves, drain valves, backflow preventers, and vacuum breakers.

2.6 TRANSITION FITTINGS

A. General Requirements:

1. Same size as pipes to be joined.
2. Pressure rating at least equal to pipes to be joined.
3. End connections compatible with pipes to be joined.
4. NSF 372 Lead-Free ANSI 3rd Party Certified

B. Fitting-Type Transition Couplings: Manufactured piping coupling or specified piping system fitting.

C. Sleeve-Type Transition Coupling: AWWA C219.

1. Manufacturers: Subject to compliance with requirements, provide products by one of the following:

a. Cascade Waterworks Manufacturing.
b. Dresser, Inc.; Dresser Piping Specialties.
c. Ford Meter Box Company, Inc. (The).
d. Smith-Blair, Inc; a Sensus company.
e. Viking Johnson; c/o Mueller Co.

D. Plastic-to-Metal Transition Fittings:

1. Manufacturers: Subject to compliance with requirements, provide products by one of the following:

a. Charlotte Pipe and Foundry Company.
b. Harvel Plastics, Inc.
c. Spears Manufacturing Company.

2. Description: CPVC or PVC one-piece fitting with manufacturer's Schedule 80 equivalent dimensions; one end with threaded brass insert and one solvent-cement-socket or threaded end.

E. Plastic-to-Metal Transition Unions:

1. Manufacturers: Subject to compliance with requirements, provide products by one of the following:

a. Colonial Engineering, Inc.
b. NIBCO INC.
c. Spears Manufacturing Company.

2. Description: CPVC or PVC four-part union. Include brass or stainless-steel threaded end, solvent-cement-joint or threaded plastic end, rubber O-ring, and union nut.

2.7 DIELECTRIC FITTINGS

A. General Requirements: Assembly of copper alloy and ferrous materials or ferrous material body with separating nonconductive insulating material suitable for system fluid, pressure, and temperature; NSF 372 Lead-Free ANSI 3rd Party Certified.

B. Dielectric Unions:

1. Manufacturers: Subject to compliance with requirements, provide products by one of the following:

   a. Capitol Manufacturing Company.
   b. Central Plastics Company.
   c. EPCO Sales, Inc.
   d. Watts Regulator Co.; a division of Watts Water Technologies, Inc.
   e. Zurn Plumbing Products Group; Wilkins Water Control Products.

2. Description:

   a. Pressure Rating: 250 psig at 180 deg F (82 deg C).
   b. End Connections: Solder-joint copper alloy and threaded ferrous.

C. Dielectric Flanges:

1. Manufacturers: Subject to compliance with requirements, provide products by one of the following:

   a. Capitol Manufacturing Company.
   b. Central Plastics Company.
   c. EPCO Sales, Inc.
   d. Watts Regulator Co.; a division of Watts Water Technologies, Inc.

2. Description:

   a. Factory-fabricated, bolted, companion-flange assembly.
   b. Pressure Rating: 150 psig or 300 psig as required to suit system pressures.
   c. End Connections: Solder-joint copper alloy and threaded ferrous; threaded solder-joint copper alloy and threaded ferrous.

D. Dielectric-Flange Kits:

1. Manufacturers: Subject to compliance with requirements, provide products by one of the following:

   a. Advance Products & Systems, Inc.
   b. Calpico, Inc.
   c. Central Plastics Company.
   d. Pipeline Seal and Insulator, Inc.

2. Description:

   a. Nonconducting materials for field assembly of companion flanges.

b. Pressure Rating: 150 psig or 300 psig as required to suit system pressures.
c. Gasket: Neoprene or phenolic.
d. Bolt Sleeves: Phenolic or polyethylene.
e. Washers: Phenolic with steel backing washers.

E. Dielectric Couplings:

1. Manufacturers: Subject to compliance with requirements, provide products by one of the following:

a. Calpico, Inc.
b. Lochinvar Corporation.

2. Description:

a. Galvanized-steel coupling.
b. Pressure Rating: 300 psig at 225 deg F (107 deg C).
c. End Connections: Female threaded.
d. Lining: Inert and noncorrosive, thermoplastic.

F. Dielectric Nipples:

1. Manufacturers: Subject to compliance with requirements, provide products by one of the following:

a. Perfection Corporation; a subsidiary of American Meter Company.
b. Precision Plumbing Products, Inc.
c. Victaulic Company.

2. Description:

a. Electroplated steel nipple complying with ASTM F 1545.
b. Pressure Rating: 300 psig at 225 deg F (107 deg C).
c. End Connections: Male threaded or grooved.
d. Lining: Inert and noncorrosive, propylene.

2.8 FLEXIBLE CONNECTORS

A. Manufacturers: Subject to compliance with requirements, provide products by one of the following:

1. Flex-Hose Co., Inc.
2. Flexicraft Industries.
3. Flex Pression, Ltd.
4. Hyspan Precision Products, Inc.
5. Metraflex, Inc.

B. Bronze-Hose Flexible Connectors: Corrugated-bronze tubing with bronze wire-braid covering and ends brazed to inner tubing.

1. NSF 372 Lead-Free ANSI 3rd Party Certified.

2. Working-Pressure Rating: Minimum 200 psig.
3. End Connections NPS 2 (DN 50) and Smaller: Threaded copper pipe or plain-end copper tube.
4. End Connections NPS 2-1/2 (DN 65) and Larger: Flanged copper alloy.

PART 3 - EXECUTION

3.1 EARTHWORK

A. Comply with requirements in Division 31 Section "Earth Moving" for excavating, trenching, and backfilling.

3.2 PIPING INSTALLATION

A. Drawing plans, schematics, and diagrams indicate general location and arrangement of domestic water piping. Indicated locations and arrangements are used to size pipe and calculate friction loss, expansion, and other design considerations. Install piping as indicated unless deviations to layout are approved on Coordination Drawings.

B. Install copper tubing under building slab according to CDA's "Copper Tube Handbook."

C. Install shutoff valve immediately upstream of each dielectric fitting.

D. Install domestic water piping level or pitched with 0.25 percent slope downward toward drain and plumb.

E. Install seismic restraints on piping. Comply with requirements in Division 22 Section "Vibration and Seismic Controls for Plumbing Piping and Equipment" for seismic-restraint devices.

F. Install piping concealed from view and protected from physical contact by building occupants unless otherwise indicated and except in equipment rooms and service areas.

G. Install piping indicated to be exposed and piping in equipment rooms and service areas at right angles or parallel to building walls. Diagonal runs are prohibited unless specifically indicated otherwise.

H. Install piping above accessible ceilings to allow sufficient space for ceiling panel removal, and coordinate with other services occupying that space.

I. Install piping adjacent to equipment and specialties to allow service and maintenance.

J. Install piping to permit valve servicing.

K. Install nipples, unions, special fittings, and valves with pressure ratings the same as or higher than system pressure rating used in applications below unless otherwise indicated.

L. Install piping free of sags and bends.

M. Install fittings for changes in direction and branch connections.

N. Install PEX piping with loop at each change of direction of more than 90 degrees.

O. Install unions in copper tubing at final connection to each piece of equipment, machine, and specialty.

P. Install pressure gages on suction and discharge piping from each plumbing pump and packaged booster pump. Comply with requirements in Division 22 Section "Meters and Gages for Plumbing Piping" for pressure gages.

Q. Install thermostats in hot-water circulation piping. Comply with requirements in Division 22 Section "Domestic Water Pumps" for thermostats.

R. Install thermometers on inlet and outlet piping at each water heater. Comply with requirements in Division 22 Section "Meters and Gages for Plumbing Piping" for thermometers.

S. Install thermostat on outlet of each thermostatic mixing valve, if not furnished integral to pre-piped mixing valve package. Comply with requirements in Division 22 Section "Meters and Gages for Plumbing Piping" for thermometers.

T. Install sleeves for piping penetrations of walls, ceilings, and floors. Comply with requirements for sleeves specified in Division 22 Section "Common Work Results for Plumbing".

U. Install sleeve seals for piping penetrations of concrete walls and slabs. Comply with requirements for sleeve seals specified in Division 22 Section "Common Work Results for Plumbing".

V. Install escutcheons for piping penetrations of walls, ceilings, and floors. Comply with requirements for escutcheons specified in Division 22 Section "Common Work Results for Plumbing".

3.3 JOINT CONSTRUCTION

A. Remove scale, slag, dirt, and debris from inside and outside of pipes, tubes, and fittings before assembly.

B. Threaded Joints: Thread pipe with tapered pipe threads according to ASME B1.20.1. Cut threads full and clean using sharp dies. Ream threaded pipe ends to remove burrs and restore full ID. Join pipe fittings and valves as follows:

1. Apply appropriate tape or thread compound to external pipe threads.
2. Damaged Threads: Do not use pipe or pipe fittings with threads that are corroded or damaged.

C. Brazed Joints: Join copper tube and fittings according to CDA's "Copper Tube Handbook," "Brazed Joints" Chapter.

D. Soldered Joints: Apply ASTM B 813, water-flushable flux to end of tube. Join copper tube and fittings according to ASTM B 828 or CDA's "Copper Tube Handbook.

E. Pressure-Sealed Joints for Copper Tubing: Join copper tube and pressure-seal fittings with tools recommended by fitting manufacturer.

F. PEX Piping Joints: Join according to ASTM F 1807.

G. Dissimilar-Material Piping Joints: Make joints using adapters compatible with materials of both piping systems.

3.4 VALVE INSTALLATION

A. General-Duty Valves: Comply with requirements in Division 22 Section "General-Duty Valves for Plumbing Piping" for valve installations.

B. Install shutoff valve close to water main on each branch and riser serving plumbing fixtures or equipment, on each water supply to equipment, and on each water supply to plumbing fixtures that do not have supply stops. Use ball or gate valves for piping NPS 2 (DN 50) and smaller. Use butterfly or gate valves for piping NPS 2-1/2 (DN 65) and larger.

C. Install drain valves for equipment at base of each water riser, at low points in horizontal piping, and where required to drain water piping. Drain valves are specified in Division 22 Section "Domestic Water Piping Specialties."

1. Hose-End Drain Valves: At low points in water mains, risers, and branches.
2. Stop-and-Waste Drain Valves: Instead of hose-end drain valves where indicated.

D. Install calibrated balancing valves in each hot-water circulation return branch and discharge side of each pump and circulator. Set calibrated balancing valves partly open to restrict but not stop flow. Comply with requirements in Division 22 Section "Domestic Water Piping Specialties" for calibrated balancing valves.

3.5 TRANSITION FITTING INSTALLATION

A. Install transition couplings at joints of dissimilar piping.

B. Transition Fittings in Underground Domestic Water Piping:

1. NPS 1-1/2 (DN 40) and Smaller: Fitting-type coupling.
2. NPS 2 (DN 50) and Larger: Sleeve-type coupling.

C. Transition Fittings in Aboveground Domestic Water Piping NPS 2 (DN 50) and Smaller: Plastic-to-metal transition fittings or unions.

3.6 DIELECTRIC FITTING INSTALLATION

A. Install dielectric fittings in piping at connections of dissimilar metal piping and tubing.

B. Dielectric Fittings for NPS 2 (DN 50) and Smaller: Use dielectric couplings or nipples

C. Dielectric Fittings for NPS 2-1/2 to NPS 4 (DN 65 to DN 100): Use dielectric flanges or flange kits.

3.7 FLEXIBLE CONNECTOR INSTALLATION

A. Install flexible connectors in suction and discharge piping connections to each domestic water pump.

B. Install bronze-hose flexible connectors in copper domestic water tubing.

3.8 HANGER AND SUPPORT INSTALLATION

A. Comply with requirements in Division 22 Section "Vibration and Seismic Controls for Plumbing Piping and Equipment" for seismic-restraint devices.

B. Comply with requirements in Division 22 Section "Hangers and Supports for Plumbing Piping and Equipment" for pipe hanger and support products and installation.

1. Vertical Piping: MSS Type 8 or 42, clamps.
2. Individual, Straight, Horizontal Piping Runs:

   a. 100 Feet and Less: MSS Type 1, adjustable, steel clevis hangers.
   b. Longer Than 100 Feet: MSS Type 43, adjustable roller hangers.
   c. Longer Than 100 Feet If Indicated: MSS Type 49, spring cushion rolls.

3. Multiple, Straight, Horizontal Piping Runs 100 Feet or Longer: MSS Type 44, pipe rolls. Support pipe rolls on trapeze.
4. Base of Vertical Piping: MSS Type 52, spring hangers.

C. Support vertical piping and tubing at base and at each floor.

D. Rod diameter may be reduced one size for double-rod hangers, to a minimum of 3/8 inch.

E. Install hangers for copper tubing with the following maximum horizontal spacing and minimum rod diameters:

1. NPS 3/4 (DN 20) and Smaller: 60 inches with 3/8-inch rod.
2. NPS 1 and NPS 1-1/4 (DN 25 and DN 32): 72 inches with 3/8-inch rod.
3. NPS 1-1/2 and NPS 2 (DN 40 and DN 50): 96 inches with 3/8-inch rod.
4. NPS 2-1/2 (DN 65): 108 inches with 1/2-inch rod.
5. NPS 3 to NPS 5 (DN 80 to DN 125): 10 feet with 1/2-inch rod.

F. Install supports for vertical copper tubing every 10 feet.

G. Install vinyl-coated hangers for PEX piping with the following maximum horizontal spacing and minimum rod diameters:

1. NPS 1 (DN 25) and Smaller: 32 inches with 3/8-inch rod.

H. Install hangers for vertical PEX piping every 48 inches.

I. Support piping and tubing not listed in this article according to MSS SP-69 and manufacturer's written instructions.

3.9 CONNECTIONS

A. Drawings indicate general arrangement of piping, fittings, and specialties.

B. Install piping adjacent to equipment and machines to allow service and maintenance.

C. Connect domestic water piping to water-service entrance piping, where indicated on the plans, using transition fitting to join dissimilar piping materials, and extend to the following:
   1. Water Heaters: Cold-water inlet and hot-water outlet piping in sizes indicated, but not smaller than sizes of water heater connections.
   2. Plumbing Fixtures: Cold- and hot-water supply piping in sizes indicated, but not smaller than required by plumbing code. Comply with requirements in Division 22 plumbing fixture Sections for connection sizes.
   3. Equipment: Cold- and hot-water supply piping as indicated, but not smaller than equipment connections. Provide shutoff valve and union for each connection. Use flanges instead of unions for NPS 2-1/2 (DN 65) and larger.

3.10 IDENTIFICATION

A. Identify system components. Comply with requirements in Division 22 Section "Identification for Plumbing Piping and Equipment" for identification materials and installation.

B. Label pressure piping with system operating pressure.

3.11 FIELD QUALITY CONTROL

A. Perform tests and inspections.

B. Piping Inspections:

   1. Do not enclose, cover, or put piping into operation until it has been inspected and approved by authorities having jurisdiction.
   2. During installation, notify authorities having jurisdiction at least one day before inspection must be made. Perform tests specified below in presence of authorities having jurisdiction:

      a. Roughing-in Inspection: Arrange for inspection of piping before concealing or closing-in after roughing-in and before setting fixtures.
      b. Final Inspection: Arrange final inspection for authorities having jurisdiction to observe tests specified below and to ensure compliance with requirements.

   3. Reinspection: If authorities having jurisdiction find that piping will not pass tests or inspections, make required corrections and arrange for reinspection.
   4. Reports: Prepare inspection reports and have them signed by authorities having jurisdiction.

C. Piping Tests:

1. Fill domestic water piping. Check components to determine that they are not air bound and that piping is full of water.
2. Test for leaks and defects in new piping and parts of existing piping that have been altered, extended, or repaired. If testing is performed in segments, submit a separate report for each test, complete with diagram of portion of piping tested.
3. Leave new, altered, extended, or replaced domestic water piping uncovered and unconcealed until it has been tested and approved. Expose work that was covered or concealed before it was tested.
4. Cap and subject piping to static water pressure of 50 psig above operating pressure, without exceeding pressure rating of piping system materials. Isolate test source and allow to stand for four hours. Leaks and loss in test pressure constitute defects that must be repaired.
5. Repair leaks and defects with new materials and retest piping or portion thereof until satisfactory results are obtained.
6. Prepare reports for tests and for corrective action required.

D. Domestic water piping will be considered defective if it does not pass tests and inspections.

E. Prepare test and inspection reports.

3.12 ADJUSTING

A. Perform the following adjustments before operation:

1. Close drain valves, hydrants, and hose bibbs.
2. Open shutoff valves to fully open position.
3. Open throttling valves to proper setting.
4. Adjust balancing valves in hot-water-circulation return piping to provide adequate flow.

    a. Manually adjust ball-type balancing valves in hot-water-circulation return piping to provide flow of hot water in each branch.
    b. Adjust calibrated balancing valves to flows indicated.

5. Remove plugs used during testing of piping and for temporary sealing of piping during installation.
6. Remove and clean strainer screens. Close drain valves and replace drain plugs.
7. Remove filter cartridges from housings and verify that cartridges are as specified for application where used and are clean and ready for use.
8. Check plumbing specialties and verify proper settings, adjustments, and operation.

3.13 CLEANING

A. Clean and disinfect potable domestic water piping as follows:

1. Purge new piping and parts of existing piping that have been altered, extended, or repaired before using.

2. Use purging and disinfecting procedures prescribed by authorities having jurisdiction; if methods are not prescribed, use procedures described in either AWWA C651 or AWWA C652 or follow procedures described below:

   a. Flush piping system with clean, potable water until dirty water does not appear at outlets.
   b. Fill and isolate system according to either of the following:

      1) Fill system or part thereof with water/chlorine solution with at least 50 ppm of chlorine. Isolate with valves and allow to stand for 24 hours.
      2) Fill system or part thereof with water/chlorine solution with at least 200 ppm of chlorine. Isolate and allow to stand for three hours.

   c. Flush system with clean, potable water until no chlorine is in water coming from system after the standing time.
   d. Submit water samples in sterile bottles to authorities having jurisdiction. Repeat procedures if biological examination shows contamination.

B. Clean non-potable domestic water piping as follows:

1. Purge new piping and parts of existing piping that have been altered, extended, or repaired before using.
2. Use purging procedures prescribed by authorities having jurisdiction or; if methods are not prescribed, follow procedures described below:

   a. Flush piping system with clean, potable water until dirty water does not appear at outlets.
   b. Submit water samples in sterile bottles to authorities having jurisdiction. Repeat procedures if biological examination shows contamination.

C. Prepare and submit reports of purging and disinfecting activities.

D. Clean interior of domestic water piping system. Remove dirt and debris as work progresses.

3.14 PIPING SCHEDULE

A. Transition and special fittings with pressure ratings at least equal to piping rating may be used in applications below unless otherwise indicated.

B. Flanges and unions may be used for aboveground piping joints unless otherwise indicated.

C. Under-building-slab, domestic water piping, NPS 2 (DN 50) and smaller shall be the following:

1. Soft copper tube, ASTM B 88, Type K; wrought-copper solder-joint fittings; and brazed joints. NOTE: No fittings are allowed below slab, except final connections (such as to drain trap primer taps).
2. PEX Tubing, continuous length below slab, fittings for PEX tube; and crimped joints. NOTE: No fittings are allowed below slab, except final connections (such as to drain trap primer taps).

D. Aboveground domestic water piping, NPS 1-1/4 (DN 32) and smaller shall be one of the following:

1. Hard copper tube, ASTM B 88, Type L wrought-copper solder-joint fittings; and soldered joints.
2. Hard copper tube, ASTM B 88, Type L (ASTM B 88M, Type B) copper pressure-seal-joint fittings; and pressure-sealed joints.
3. PEX Tube, fittings for PEX tube; and crimped joints.
4. Special Requirements:
   a. PEX tube shall be allowed in the specified size range in all aboveground areas except in excluded locations as follows:
      1) PEX tube shall not be used in air plenums.
      2) PEX tube shall not be used in other areas where its use is prohibited by code or authority having jurisdiction.
      2) All Domestic Water branch piping to points 15 lineal feet upstream and downstream and throughout interpiping of gas-fired domestic water heaters, thermostatic mixing valves and domestic hot water recirculating pumps shall be hard copper tube, ASTM B 88, Type L wrought-copper solder-joint fittings; and soldered joints.

E. Aboveground domestic water piping, NPS 1-1/2 (DN 40) and larger shall be the following:

1. Hard copper tube, ASTM B 88, Type L wrought-copper solder-joint fittings; and soldered joints.
2. Hard copper tube, ASTM B 88, Type L (ASTM B 88M, Type B) copper pressure-seal-joint fittings; and pressure-sealed joints.

3.15 VALVE SCHEDULE

A. General:

1. Refer to Division 22 Section “General Duty Valves for Plumbing Piping”.
2. Use bronze valves on PEX and copper piping.

B. Drawings indicate valve types to be used. Where specific valve types are not indicated, the following requirements apply:

1. Shutoff Duty: Use ball or gate valves for piping NPS 2 (DN 50) and smaller. Use gate valves with flanged ends for piping NPS 2-1/2 (DN 65) and larger.
2. Throttling Duty: Use ball valves..
3. Hot-Water Circulation Piping, Balancing Duty: Calibrated balancing valves.
4. Drain Duty: Hose-end drain valves.

C. Use check valves to maintain correct direction of domestic water flow to and from equipment.

END OF SECTION 221116

SECTION 221119 - DOMESTIC WATER PIPING SPECIALTIES

PART 1 - GENERAL

1.1 RELATED DOCUMENTS

A. Drawings and general provisions of the Contract, including General and Supplementary Conditions and Division 01 Specification Sections, apply to this Section.

1.2 SUMMARY

A. This Section includes the following domestic water piping specialties:

1. Vacuum breakers.
2. Backflow preventers.
3. Balancing valves.
4. Temperature-actuated water mixing valves.
5. Strainers.
6. Wall hydrants.
7. Drain valves.
8. Water hammer arresters.
9. Air vents.
10. Trap-seal primer valves.

B. Related Sections include the following:

1. Section 220519 "Meters and Gages for Plumbing Piping" for thermometers, pressure gages, and flow meters in domestic water piping.
2. Section 224700 "Drinking Fountains and Water Coolers" for water filters for drinking fountains and water coolers.

1.3 PERFORMANCE REQUIREMENTS

A. Minimum Working Pressure for Domestic Water Piping Specialties: 150 psig, unless otherwise indicated.

B. *All products coming in contact with potable water systems shall be NSF 372 Lead-Free ANSI 3rd Party Certified, except for products specifically exempted from such certification by NSF 372. Where such NSF 372 Lead-Free requirement is in conflict with any specification in the contract documents for product(s) coming in contact with potable water, NSF 372 compliance shall take precedence, and the cost for NSF 372 compliant product(s) shall be carried in the Base Bid.*

1.4 SUBMITTALS

A. Product Data: For each type of product indicated.

B. Shop Drawings: Diagram power, signal, and control wiring.

C. Field quality-control test reports.

D. Operation and Maintenance Data: For domestic water piping specialties to include in emergency, operation, and maintenance manuals.

1.5 QUALITY ASSURANCE

A. Electrical Components, Devices, and Accessories: Listed and labeled as defined in NFPA 70, Article 100, by a testing agency acceptable to authorities having jurisdiction, and marked for intended use.

B. NSF Compliance:

1. Comply with NSF 14, "Plastics Piping Components and Related Materials," for plastic domestic water piping components.
2. Comply with NSF 61, "Drinking Water System Components - Health Effects; Sections 1 through 9."
3. Comply with NSF 372 Lead-Free ANSI 3rd Party Certified, for all products coming in contact with potable water, except for products specifically exempted from such certification by NSF 372.

PART 2 - PRODUCTS

2.1 VACUUM BREAKERS

A. Pipe-Applied, Atmospheric-Type Vacuum Breakers

1. Manufacturers: Subject to compliance with requirements, provide products by one (1) of the following:

a. Cash Acme
b. Conbraco Industries, Inc.
c. FEBCO; SPX Valves & Controls
d. Watts Industries, Inc.; Water Products Div.
e. Zurn Plumbing Products Group; Wilkins Div.

2. Standard: ASSE 1001.
3. Size: NPS 1/4 to NPS 3 (DN 8 to DN 80), as required to match connected piping.
4. Body: Bronze.
5. Inlet and Outlet Connections: Threaded.
6. Finish: Rough bronze (in Mechanical Rooms, Boiler Rooms or other Utility spaces); chrome plated (elsewhere).

B. Hose-Connection Vacuum Breakers

1. Manufacturers: Subject to compliance with requirements, provide products by one (1) of the following:

a. Conbraco Industries, Inc.
b. Legend Valve
c. MIFAB, Inc.
d. Prier Products, Inc.
e. Watts Industries, Inc.; Water Products Div.
f. Woodford Manufacturing Company
g. Zurn Plumbing Products Group; Light Commercial Operation
h. Zurn Plumbing Products Group; Wilkins Div.

2. Standard: ASSE 1011.
3. Body: Bronze, nonremovable, with manual drain.
4. Outlet Connection: Garden-hose threaded complying with ASME B1.20.7.

2.2 BACKFLOW PREVENTERS

A. Reduced-Pressure-Principle Backflow Preventers:

1. Basis-of-Design Product: Subject to compliance with requirements, provide the product indicated on Drawings at each point of backflow prevention application, or a comparable product by one (1) of the following:

a. Ames Co.
b. Conbraco Industries, Inc.
c. FEBCO; SPX Valves & Controls
d. Watts Industries, Inc.; Water Products Div.
e. Zurn Plumbing Products Group; Wilkins Div.

2. Standard: ASSE 1013.
3. Operation: Continuous-pressure applications.
4. Pressure Loss: 12 psig maximum, through middle 1/3 of flow range.
5. Size: As indicated on the Drawings.
6. Body: Bronze for NPS 2 (DN 50) and smaller.
7. End Connections: Threaded for NPS 2 (DN 50) and smaller.
8. Configuration: Designed for horizontal, straight through flow.
9. Accessories:

a. Valves: Ball type with threaded ends on inlet and outlet of NPS 2 (DN 50) and smaller; outside screw and yoke gate-type with flanged ends on inlet and outlet of NPS 2-1/2 (DN 65) and larger.
b. Air-Gap Fitting: ASME A112.1.2, matching backflow-preventer connection.
c. Inlet strainer; bronze or stainless steel

B. End Connections: Threaded for NPS 2 (DN 50) and smaller; flanged for NPS 2-1/2 and NPS 3 (DN 65 and DN 80).

2.3 BALANCING VALVES

A. Bronze Calibrated Balancing Valves (for Domestic Hot Water Circulating system):

1. Manufacturers: Subject to compliance with requirements, provide products by one (1) of the following:

a. Armstrong International, Inc.
b. ITT Industries; Bell & Gossett Div.
c. NIBCO INC.
d. Taco, Inc.
e. Watts Industries, Inc.; Water Products Div.

2. Type: Ball valve with two readout ports and memory setting indicator.
3. Body: Bronze.
4. Size: Same as connected piping, but not larger than NPS 2 (DN 50).
5. Accessories: Meter hoses, fittings, valves, differential pressure meter, and carrying case.

B. Accessories: Meter hoses, fittings, valves, differential pressure meter, and carrying case.

1. Handle: Vinyl-covered steel with memory-setting device.

2.4 TEMPERATURE-ACTUATED WATER MIXING VALVES

A. Primary, Thermostatic, Water Mixing Valves (TMV-1)

1. Manufacturers: Subject to compliance with requirements, provide products by one (1) of the following (refer to Domestic Water Heating Accessory Schedule for Basis-of-Design products):

a. Bradley Corporation
b. Lawler Manufacturing Company, Inc.
c. Leonard Valve Company.
d. Powers; a Watts Industries Co.
e. Symmons Industries, Inc.

2. Must protect against hot and cold water supply failure, and thermostat failure.
3. Standard: ASSE 1017.
4. Pressure Rating: 125 psig.
5. Type: Exposed-mounting, thermostatically controlled water mixing valve.
6. Material: Bronze body with corrosion-resistant interior components.
7. Connections: Threaded inlets and outlet.
8. Accessories: Manual temperature control, check stops on hot- and cold-water supplies, and adjustable, temperature-control handle.
9. Valve Performance: (Flow and Pressure): as noted on the drawings for each valve.
10. Tempered-Water Setting: as noted on the drawings for each valve.
11. Valve Finish: Rough bronze.
12. Piping Finish: Copper.

B. Individual-Fixture, Water Tempering Valves: Refer to Plumbing Fixture Schedule for individual fixture water tempering valves.

2.5 STRAINERS FOR DOMESTIC WATER PIPING

A. Y-Pattern Strainers :

1. Pressure Rating: 125 psig minimum, unless otherwise indicated.

2. Body: Bronze for NPS 2 (DN 50) and smaller; cast iron with interior lining complying with AWWA C550 or FDA-approved, epoxy coating and for NPS 2-1/2 (DN 65) and larger.
3. End Connections: Threaded for NPS 2 (DN 50) and smaller; flanged for NPS 2-1/2 (DN 65) and larger.
4. Screen: Stainless steel with round perforations, unless otherwise indicated.
5. Perforation Size:

    a. Strainers NPS 2 (DN 50) and Smaller: 0.033 inch.
    b. Strainers NPS 2-1/2 to NPS 4 (DN 65 to DN 100): 0.045 inch.

6. Drain: Pipe plug.

2.6 WALL HYDRANTS

A. Nonfreeze Wall Hydrants (NFWH):

1. Manufacturers: Subject to compliance with requirements, provide products by one (1) of the following (Refer to Plumbing Fixture Schedule on the drawings for Basis-of-Design product):

    a. Smith, Jay R. Mfg. Co.; Division of Smith Industries, Inc.
    b. Tyler Pipe; Wade Div.
    c. Watts Drainage Products Inc.
    d. Woodford Manufacturing Company
    e. Zurn Plumbing Products Group; Light Commercial Operation

2. Standard: ASME A112.21.3M for concealed-outlet, self-draining wall hydrants.
3. Pressure Rating: 125 psig.
4. Operation: Loose key.
5. Casing and Operating Rod: Of length required to match wall thickness. Include wall clamp.
6. Inlet: NPS 3/4 (DN 20).
7. Outlet: Concealed, with integral vacuum breaker and garden-hose thread complying with ASME B1.20.7.
8. Box: Deep, flush mounting with cover.
9. Box and Cover Finish: Polished nickel bronze.
10. Outlet: Exposed, with integral vacuum breaker and garden-hose thread complying with ASME B1.20.7.
11. Nozzle and Wall-Plate Finish: Rough bronze.
12. Operating Keys(s): Two (2) with each wall hydrant.

2.7 DRAIN VALVES

A. Ball-Valve-Type, Hose-End Drain Valves

1. Standard: MSS SP-110 for standard-port, two-piece ball valves.
2. Pressure Rating: 400-psig minimum CWP.
3. Size: NPS 3/4 (DN 20).
4. Body: Copper alloy.
5. Ball: Chrome-plated brass.

6. Seats and Seals: Replaceable.
7. Handle: Vinyl-covered steel.
8. Inlet: Threaded or solder joint.
9. Outlet: Threaded, short nipple with garden-hose thread complying with ASME B1.20.7 and cap with brass chain.

B. Gate-Valve-Type, Hose-End Drain Valves

1. Standard: MSS SP-80 for gate valves.
2. Pressure Rating: Class 125.
3. Size: NPS 3/4 (DN 20).
4. Body: ASTM B 62 bronze.
5. Inlet: NPS 3/4 (DN 20) threaded or solder joint.
6. Outlet: Garden-hose thread complying with ASME B1.20.7 and cap with brass chain.

C. Stop-and-Waste Drain Valves

1. Standard: MSS SP-110 for ball valves or MSS SP-80 for gate valves.
2. Pressure Rating: 200-psig minimum CWP or Class 125.
3. Size: NPS 3/4 (DN 20).
4. Body: Copper alloy or ASTM B 62 bronze.
5. Drain: NPS 1/8 (DN 6) side outlet with cap.

2.8 WATER HAMMER ARRESTERS

A. Water Hammer Arresters:

1. Available Manufacturers: Subject to compliance with requirements, manufacturers offering products that may be incorporated into the Work include, but are not limited to, the following:

   a. Josam Company
   b. Wilkins Water Control Products
   c. PPP Inc.
   d. Watts Drainage Products Inc.
   e. Zurn Plumbing Products Group; Specification Drainage Operation

2. Standard: ASSE 1010 or PDI-WH 201.
3. Type: Copper tube with piston.
4. Size: ASSE 1010, Sizes AA and A through F or PDI-WH 201, Sizes A through F.

2.9 AIR VENTS

A. Bolted-Construction Automatic Air Vents

1. Body: Bronze.
2. Pressure Rating: 125-psig minimum pressure rating at 140 deg F (60 deg C).
3. Float: Replaceable, corrosion-resistant metal.
4. Mechanism and Seat: Stainless steel.
5. Size**:** NPS 3/8 (DN 10) minimum inlet.
6. Inlet and Vent Outlet End Connections: Threaded.

B. Welded-Construction Automatic Air Vents

1. Body: Stainless steel.
2. Pressure Rating: 150-psig minimum pressure rating.
3. Float: Replaceable, corrosion-resistant metal.
4. Mechanism and Seat: Stainless steel.
5. Size: NPS 3/8 (DN 10) minimum inlet.
6. Inlet and Vent Outlet End Connections: Threaded.

2.10 PRESSURE DROP ACTIVATED TRAP-SEAL PRIMER VALVES

A. Pressure Drop Activated Supply-Type, Trap-Seal Primer Valves (TP1 & TP2)

1. Manufacturers: Subject to compliance with requirements, provide products by one (1) of the following (Refer to Drainage Specialties schedule on the drawing for Basis-of-Design products):

   a. MIFAB, Inc.
   b. PPP Inc.
   c. Sioux Chief Manufacturing Company, Inc.
   d. Smith, Jay R. Mfg. Co.; Division of Smith Industries, Inc.
   e. Watts Industries, Inc.; Water Products Div.

2. Standard: ASSE 1018.
3. Pressure Rating: 125 psig minimum.
4. Body: Bronze.
5. Inlet and Outlet Connections: NPS 1/2 (DN 15) threaded, union, or solder joint.
6. Gravity Drain Outlet Connection: NPS 1/2 (DN 15) threaded or solder joint
7. Distribution Units: One (1) for each trap served.
8. Finish: Chrome plated, or rough bronze for units used with pipe or tube that is not chrome finished.

2.11 ELECTRONIC TRAP-SEAL PRIMER SYSTEMS

A. Trap-Seal Primer Systems (TP3 & TP4):

1. Manufacturers: Subject to compliance with requirements, provide products by the following:

   a. Precision Plumbing Products, Inc.

2. Standard: ASSE 1044.
3. Piping Inlet/Outlet: ½” NPT Male
4. Solder Joints: lead-free.
5. Pressure Range: 20 PSI to 150 PSI.
6. Temperature Range: 32 deg F to 125 deg F
7. Cabinet: None required.
8. Distribution Units: One (1) for each trap served
9. Electric Controls: Recycle timer, circuit breaker, U.L. listed solenoid valve, and manual switch for 115V AC power. Electrical assembly listed per U.L. 73.

10. Number of Outlets: Single (TP3) or multiple (TP4). Refer to drawings.
11. Size Outlets: NPS 1/2 (DN 15)

PART 3 - EXECUTION

3.1 INSTALLATION

A. Refer to Section 220500 "Common Work Results for Plumbing" for piping joining materials, joint construction, and basic installation requirements.

B. Install backflow preventers in each water supply to mechanical equipment and systems and to other equipment and water systems that may be sources of contamination. Comply with authorities having jurisdiction.

1. Locate backflow preventers in same room as connected equipment or system.
2. Install drain for backflow preventers with atmospheric-vent drain connection with air-gap fitting, fixed air-gap fitting, or equivalent positive pipe separation of at least two (2) pipe diameters in drain piping and pipe to floor drain. Locate air-gap device attached to or under backflow preventer. Simple air breaks are not acceptable for this application.
3. Do not install bypass piping around backflow preventers.

C. Install balancing valves in locations where they can easily be adjusted.

D. Install temperature-actuated water mixing valves with check stops or shutoff valves on inlets and with shutoff valve on outlet.

1. Install thermometers and water regulators if specified.
2. Install cabinet-type units recessed in or surface mounted on wall as specified.

E. Install Y-pattern strainers for water on supply side of each backflow preventer; water pressure-reducing valve, solenoid valve, and pump.

F. Install water hammer arresters in water piping according to PDI-WH 201.

G. Install air vents at high points of water piping.

H. Install supply-type, trap-seal primer valves with outlet piping pitched down toward drain trap a minimum of one percent (1%), and connect to floor-drain body, trap, or inlet fitting. Adjust valve for proper flow.

3.2 CONNECTIONS

A. Piping installation requirements are specified in other Division 22 Sections. Drawings indicate general arrangement of piping and specialties.

B. Ground equipment according to Section 260526 "Grounding and Bonding for Electrical Systems."

C. Connect wiring according to Section 260519 "Low-Voltage Electrical Power Conductors and Cables."

3.3 LABELING AND IDENTIFYING

A. Equipment Nameplates and Signs: Install engraved plastic-laminate equipment nameplate or sign on or near each of the following:

1. Pressure vacuum breakers.
2. Intermediate atmospheric-vent backflow preventers.
3. Reduced-pressure-principle backflow preventers.
4. Carbonated-beverage-machine backflow preventers.
5. Calibrated balancing valves.
6. Primary, thermostatic, water mixing valves.
7. Supply-type, trap-seal primer valves.

B. Distinguish among multiple units, inform operator of operational requirements, indicate safety and emergency precautions, and warn of hazards and improper operations, in addition to identifying unit. Nameplates and signs are specified in Section 220553 "Identification for Plumbing Piping and Equipment."

3.4 FIELD QUALITY CONTROL

A. Perform the following tests and prepare test reports:

1. Test each pressure vacuum breaker, reduced-pressure-principle backflow preventer according to authorities having jurisdiction and the device's reference standard.

B. Remove and replace malfunctioning domestic water piping specialties and retest as specified above.

3.5 ADJUSTING

A. Set field-adjustable flow set points of balancing valves.

B. Set field-adjustable temperature set points of temperature-actuated water mixing valves.

END OF SECTION 221119

SECTION 221123 - DOMESTIC WATER PUMPS

PART 1 - GENERAL

1.1 RELATED DOCUMENTS

A. Drawings and general provisions of the Contract, including General and Supplementary Conditions and Division 01 Specification Sections, apply to this Section.

1.2 SUMMARY

A. Section Includes:

1. In-line centrifugal pumps.

1.3 DEFINITIONS

A. Low Voltage: As defined in NFPA 70 for circuits and equipment operating at less than 50 V or for remote-control, signaling power-limited circuits.

1.4 SUBMITTALS

A. Product Data: For each type of product indicated. Include materials of construction, rated capacities, certified performance curves with operating points plotted on curves, operating characteristics, electrical characteristics, and furnished specialties and accessories.

B. Operation and Maintenance Data: For domestic water pumps to include in operation and maintenance manuals.

1.5 QUALITY ASSURANCE

A. Electrical Components, Devices, and Accessories: Listed and labeled as defined in NFPA 70, by a qualified testing agency, and marked for intended location and application.

B. UL Compliance: Comply with UL 778 for motor-operated water pumps.

1.6 DELIVERY, STORAGE, AND HANDLING

A. Retain shipping flange protective covers and protective coatings during storage.

B. Protect bearings and couplings against damage.

C. Comply with pump manufacturer's written rigging instructions for handling.

PART 2 - PRODUCTS

2.1 IN-LINE, SEALLESS CENTRIFUGAL PUMPS

A. Basis-of-Design Product: Subject to compliance with requirements, provide product indicated on Drawings or comparable product by one (1) of the following:

1. Armstrong Pumps Inc.
2. Bell & Gossett Domestic Pump; ITT Corporation
3. Grundfos Pumps Corp.
4. TACO Incorporated

B. Description: Factory-assembled and -tested, in-line, close-coupled, canned-motor, sealless, overhung-impeller centrifugal pumps.

C. Pump Construction:

1. Pump and Motor Assembly: Hermetically sealed, replaceable-cartridge type with motor and impeller on common shaft and designed for installation with pump and motor shaft horizontal.
2. Casing: Bronze, with threaded or companion-flange connections.
3. Impeller: Plastic.
4. Motor: Single speed, unless otherwise indicated.

D. Capacities and Characteristics:

1. Refer to Plumbing Pump Schedule on the Drawings.

2.2 MOTORS

A. Motor Sizes: Minimum size as indicated. If not indicated, large enough so driven load will Not require motor to operate in service factor range above 1.0.

B. Controllers, Electrical Devices, and Wiring: Comply with requirements for electrical devices and connections specified in Division 26 Sections.

2.3 CONTROLS

A. Thermostats: Electric; adjustable for control of hot-water circulation pump.

1. Type: Water-immersion temperature sensor, for installation in piping.
2. Range: 50 to 125 deg F (10 to 52 deg C).
3. Enclosure: NEMA 250, Type 4X.
4. Operation of Pump: On or off.
5. Transformer: Provide if required.
6. Power Requirement: 24 V, ac.
7. Settings: Start pump at 105 deg F (41 deg C) and stop pump at 115 deg F (46 deg C).

B. Timers: Electric, for control of hot-water circulation pump.

1. Type: Programmable, 24-hour, 365 day clock with manual override on-off switch.
2. Enclosure: NEMA 250, Type 1 suitable for wall mounting.

3. Operation of Pump: On or off.
4. Transformer: Provide if required.
5. Power Requirement: 120 V, ac.
6. Programmable Sequence of Operation: Up to two (1) on-off cycles each day.

PART 3 - EXECUTION

3.1 EXAMINATION

A. Examine roughing-in of domestic-water-piping system to verify actual locations of connections before pump installation.

3.2 PUMP INSTALLATION

A. Comply with HI 1.4.

B. Install in-line, sealless centrifugal pumps with shaft horizontal unless otherwise indicated.

C. Install continuous-thread hanger rods and spring hangers of size required to support pump weight.

1. Comply with requirements for vibration isolation devices specified in Section 220548 "Vibration and Seismic Controls for Plumbing Piping and Equipment." Fabricate brackets or supports as required.
2. Comply with requirements for hangers and supports specified in Section 220529 "Hangers and Supports for Plumbing Piping and Equipment."

D. Install thermostat in hot-water return piping.

E. Install timer on wall adjacent water heater in Janitor’s Closet.

3.3 CONNECTIONS

A. Comply with requirements for piping specified in Section 221116 "Domestic Water Piping." Drawings indicate general arrangement of piping, fittings, and specialties.

B. Install piping adjacent to pumps to allow service and maintenance.

C. Connect domestic water piping to pumps. Install suction and discharge piping equal to or greater than size of pump nozzles.

1. Install shutoff valve and strainer on suction side of each pump, and check, shutoff, and throttling valves on discharge side of each pump. Install valves same size as connected piping. Comply with requirements for valves specified in Section 220523 "General-Duty Valves for Plumbing Piping" and comply with requirements for strainers specified in Section 221119 "Domestic Water Piping Specialties."
2. Install pressure gage at suction of each pump and pressure gage at discharge of each pump. Install at integral pressure-gage tappings where provided or install pressure-gage connectors in suction and discharge piping around pumps. Comply with requirements for pressure gages and snubbers specified in Section 220519 "Meters and Gages for Plumbing Piping."

D. Comply with Division 26 Sections for electrical connections, and wiring methods.

E. Connect thermostats and timers to pumps that they control.

3.4 IDENTIFICATION

A. Comply with requirements for identification specified in Section 220553 "Identification for Plumbing Piping and Equipment" for identification of pumps.

3.5 STARTUP SERVICE

A. Perform startup service.

1. Complete installation and startup checks according to manufacturer's written instructions.
2. Check piping connections for tightness.
3. Clean strainers on suction piping.
4. Set thermostats, and timers for automatic starting and stopping operation of pumps.
5. Perform the following startup checks for each pump before starting:

    a. Verify bearing lubrication.
    b. Verify that pump is free to rotate by hand and that pump for handling hot liquid is free to rotate with pump hot and cold. If pump is bound or drags, do not operate until cause of trouble is determined and corrected.
    c. Verify that pump is rotating in the correct direction.

6. Prime pump by opening suction valves and closing drains, and prepare pump for operation.
7. Start motor.
8. Open discharge valve slowly.
9. Adjust temperature settings on thermostats.
10. Adjust timer settings.

3.6 ADJUSTING

A. Adjust domestic water pumps to function smoothly, and lubricate as recommended by manufacturer.

B. Adjust initial temperature set points.

C. Set field-adjustable switches and circuit-breaker trip ranges as indicated.

END OF SECTION 221123

SECTION 221313 - FACILITY SANITARY SEWERS

PART 1 - GENERAL

1.1 RELATED DOCUMENTS

A. Drawings and general provisions of the Contract, including General and Supplementary Conditions and Division 01 Specification Sections, apply to this Section.

1.2 SUMMARY

A. Section Includes:

1. Pipe and fittings for facility sanitary sewer piping from building exits to points of connection to the site sanitary sewer system at 5 feet outside the building.
2. Clarification: Where exterior sanitary mains must be routed from outside through existing portions of the building (for example, at Existing Vestibule and Corridor, Area ‘B’), Site Contractor shall be route such “site” mains through the building portion, and collect/connect branch sanitary building exits shown on Plumbing Plans to mains.

1.3 DEFINITIONS

A. PVC: Polyvinyl chloride plastic.

1.4 SUBMITTALS

A. Product Data: For the following:

1. Pipe and fittings.

B. Coordination Drawings: Show pipe sizes, locations, and elevations. Show other piping in same trench and clearances from sewer system piping. Indicate interface and spatial relationship between piping, and proximate structures.

C. Product Certificates: For each type of cast-iron soil pipe and fitting, from manufacturer.

D. Field quality-control reports.

1.5 DELIVERY, STORAGE, AND HANDLING

A. Do not store plastic pipe and fittings in direct sunlight.

B. Protect pipe, pipe fittings, and seals from dirt and damage.

1.6 PROJECT CONDITIONS

A. Interruption of Existing Sanitary Sewerage Service: Do not interrupt service to facilities occupied by Owner or others unless permitted under the following conditions and then only after arranging to provide temporary service according to requirements indicated:

1. Notify Construction Manager no fewer than seven (7) days in advance of proposed interruption of service.
2. Do not proceed with interruption of service without Engineer's written permission.

PART 2 - PRODUCTS

2.1 HUB-AND-SPIGOT, CAST-IRON SOIL PIPE AND FITTINGS

A. Pipe and Fittings: ASTM A 74, Service class.

B. Gaskets: ASTM C 564, rubber.

C. Calking Materials: ASTM B 29, pure lead and oakum or hemp fiber.

2.2 HUBLESS CAST-IRON SOIL PIPE AND FITTINGS

A. Pipe and Fittings: ASTM A 888 or CISPI 301.

B. CISPI-Trademark, Shielded Couplings:

1. Manufacturers: Subject to compliance with requirements, provide products by one (1) of the following:

a. ANACO-Husky
b. Fernco Inc.
c. Mission Rubber Company; a division of MCP Industries, Inc.
d. Tyler Pipe

2. Description: ASTM C 1277 and CISPI 310, with stainless-steel corrugated shield; stainless-steel bands and tightening devices; and ASTM C 564, rubber sleeve with integral, center pipe stop.

2.3 PVC PIPE AND FITTINGS

A. PVC, Solid Wall, Drain, Waste and Vent Piping:

1. Pipe: ASTM D 1785, Schedule 40 PVC, with plain ends for solvent-cemented joints.
2. Fittings: ASTM D 2665, Schedule 40 PVC, socket type, made to ASTM D 3311, drain, waste and vent patterns.

PART 3 - EXECUTION

3.1 EARTHWORK

A. Excavating, trenching, and backfilling are specified in Section 312000 "Earth Moving."

3.2 PIPING INSTALLATION

A. General Locations and Arrangements: Drawing plans and details indicate general location and arrangement of underground sanitary sewer piping. Location and arrangement of piping layout

take into account design considerations. Install piping as indicated, to extent practical. Where specific installation is not indicated, follow piping manufacturer's written instructions.

B. Install piping beginning at low point, true to grades and alignment indicated with unbroken continuity of invert. Place bell ends of piping facing upstream. Install gaskets, seals, sleeves, and couplings according to manufacturer's written instructions for using lubricants, cements, and other installation requirements.

C. Install proper size increasers, reducers, and couplings where different sizes or materials of pipes and fittings are connected. Reducing size of piping in direction of flow is prohibited.

D. When installing pipe under streets or other obstructions that cannot be disturbed, use pipe-jacking process of microtunneling.

E. Install gravity-flow, nonpressure, drainage piping according to the following:

1. Install piping pitched down in direction of flow, at minimum slope of one percent (1%) unless otherwise indicated.
2. Install piping NPS 6 (DN 150) and larger with restrained joints at tee fittings and at changes in direction. Use corrosion-resistant rods, pipe or fitting manufacturer's proprietary restraint system, or cast-in-place-concrete supports or anchors.
3. Install piping with leaving inverts as indicated on the plans.
4. Install hub-and-spigot, cast-iron soil piping according to CISPI's "Cast Iron Soil Pipe and Fittings Handbook."
5. Install hubless cast-iron soil piping according to CISPI 310 and CISPI's "Cast Iron Soil Pipe and Fittings Handbook."
6. Install PVC gravity sewer piping according to ASTM D 2665.
7. Install fiberglass sewer piping according to ASTM D 3839 and ASTM F 1668.

F. Clear interior of piping of dirt and superfluous material as work progresses. Maintain swab or drag in piping, and pull past each joint as it is completed. Place plug in end of incomplete piping at end of day and when work stops.

3.3 PIPE JOINT CONSTRUCTION

A. Join gravity-flow, nonpressure, drainage piping according to the following:

1. Join hub-and-spigot, cast-iron soil piping with gasket joints according to CISPI's "Cast Iron Soil Pipe and Fittings Handbook" for compression joints.
2. Join hub-and-spigot, cast-iron soil piping with calked joints according to CISPI's "Cast Iron Soil Pipe and Fittings Handbook" for lead and oakum calked joints.
3. Join hubless cast-iron soil piping according to CISPI 310 and CISPI's "Cast Iron Soil Pipe and Fittings Handbook" for hubless-coupling joints.
4. Join PVC gravity sewer piping according to ASTM D 2665.
5. Join dissimilar pipe materials with nonpressure-type, flexible couplings.

3.4 CONNECTIONS

A. Connect nonpressure, gravity-flow drainage piping to building's sanitary building drains specified in Section 221316 "Sanitary Waste and Vent Piping."

B. Make connections to site sanitary sewer piping five feet outside the building.

3.5 CLOSING ABANDONED SANITARY SEWER SYSTEMS

A. Abandoned Piping: Close open ends of abandoned underground piping indicated to remain in place. Include closures strong enough to withstand hydrostatic and earth pressures that may result after ends of abandoned piping have been closed. Use either procedure below:

1. Close open ends of piping with at least 8-inch-thick, brick masonry bulkheads.
2. Close open ends of piping with threaded metal caps, plastic plugs, or other acceptable methods suitable for size and type of material being closed. Do not use wood plugs.

B. Backfill to grade according to Section 312000 "Earth Moving."

3.6 IDENTIFICATION

A. Materials and their installation are specified in Section 312000 "Earth Moving." Arrange for installation of green warning tapes directly over piping and at outside edges of underground manholes.

1. Use warning tape or detectable warning tape over ferrous piping.
2. Use detectable warning tape over nonferrous piping and over edges of underground manholes.

3.7 FIELD QUALITY CONTROL

A. Inspect interior of piping to determine whether line displacement or other damage has occurred. Inspect after approximately 24 inches of backfill is in place, and again at completion of Project.

1. Submit separate report for each system inspection.
2. Defects requiring correction include the following:

a. Alignment: Less than full diameter of inside of pipe is visible between structures.
b. Deflection: Flexible piping with deflection that prevents passage of ball or cylinder of size not less than ninety-two and one-half percent (92.5%) of piping diameter.
c. Damage: Crushed, broken, cracked, or otherwise damaged piping.
d. Infiltration: Water leakage into piping.
e. Exfiltration: Water leakage from or around piping.

3. Replace defective piping using new materials, and repeat inspections until defects are within allowances specified.
4. Reinspect and repeat procedure until results are satisfactory.

B. Test new piping systems, and parts of existing systems that have been altered, extended, or repaired, for leaks and defects.

1. Do not enclose, cover, or put into service before inspection and approval.
2. Test completed piping systems according to requirements of authorities having jurisdiction.

3. Schedule tests and inspections by authorities having jurisdiction with at least twenty-four (24) hours advance notice.
4. Submit separate report for each test.
5. Hydrostatic Tests: Test sanitary sewerage according to requirements of authorities having jurisdiction and the following:

    a. Fill sewer piping with water. Test with pressure of at least 10-foot head of water, and maintain such pressure without leakage for at least fifteen (15) minutes.
    b. Close openings in system and fill with water.
    c. Purge air and refill with water.
    d. Disconnect water supply.
    e. Test and inspect joints for leaks.

6. Air Tests: Test sanitary sewerage according to requirements of authorities having jurisdiction, UNI-B-6, and the following:

    a. Option: Test plastic gravity sewer piping according to ASTM F 1417.

C. Leaks and loss in test pressure constitute defects that must be repaired.

D. Replace leaking piping using new materials, and repeat testing until leakage is within allowances specified.

3.8 CLEANING

A. Clean dirt and superfluous material from interior of piping.

END OF SECTION 221313

SECTION 221316 - SANITARY WASTE AND VENT PIPING

PART 1 - GENERAL

1.1 RELATED DOCUMENTS

A. Drawings and general provisions of the Contract, including General and Supplementary Conditions and Division 01 Specification Sections, apply to this Section.

1.2 SUMMARY

A. Section includes sanitary waste, grease waste and vent systems.

1. Pipe, tube, and fittings.
2. Specialty pipe fittings.
3. Encasement for underground metal piping.

4. Related Sections:
   a. Division 22 Section "Facility Sanitary Sewers" for sanitary sewerage piping and structures outside the building.
   b. Division 22 Section "Sanitary Sewerage Pumps" for effluent and sewage pumps.

1.3 PERFORMANCE REQUIREMENTS

A. Components and installation shall be capable of withstanding the following minimum working pressure unless otherwise indicated:

1. Soil, Waste, and Vent Piping: 10-foot head of water (30 kPa)
2. Waste, Force-Main Piping: 50 psig (345 kPa)

B. Seismic Performance: Soil, waste, and vent piping and support and installation shall withstand the effects of earthquake motions determined according to the State of Connecticut Building Code.

1.4 SUBMITTALS

A. Product Data: For each type of product indicated.

B. HPBS Submittals:

1. Product Data for Section 16a-38k-5(d): For solvent cements and adhesive primers, documentation including printed statement of VOC content.
2. Laboratory Test Reports for Section 16a-38k-5(d): For solvent cements and adhesive primers, documentation indicating that products comply with the testing and product requirements of the California Department of Health Services' "Standard Practice for the

Testing of Volatile Organic Emissions from Various Sources Using Small-Scale Environmental Chambers."

C. Shop Drawings: For sovent drainage system. Include plans, elevations, sections, and details.

D. Seismic Qualification Certificates: For waste and vent piping, accessories, and components, from manufacturer.

1. Basis for Certification: Indicate whether withstand certification is based on actual test of assembled components or on calculation.
2. Detailed description of piping anchorage devices on which the certification is based and their installation requirements.

E. Field quality-control reports.

1.5 QUALITY ASSURANCE

A. Piping materials shall bear label, stamp, or other markings of specified testing agency.

B. Comply with NSF/ANSI 14, "Plastics Piping Systems Components and Related Materials," for plastic piping components. Include marking with "NSF-dwv" for plastic drain, waste, and vent piping and "NSF-sewer" for plastic sewer piping.

1.6 PROJECT CONDITIONS

A. Interruption of Existing Sanitary Waste Service: Do not interrupt service to facilities occupied by Owner or others unless permitted under the following conditions and then only after arranging to provide temporary service according to requirements indicated:

1. Construction Manager no fewer than seven days in advance of proposed interruption of sanitary waste service.
2. Do not proceed with interruption of sanitary waste service without Construction Manager's written permission.

PART 2 - PRODUCTS

2.1 PIPING MATERIALS

A. Comply with requirements in "Piping Schedule" Article for applications of pipe, tube, fitting materials, and joining methods for specific services, service locations, and pipe sizes.

2.2 HUB-AND-SPIGOT, CAST-IRON SOIL PIPE AND FITTINGS

A. Pipe and Fittings: ASTM A 74, Service class.

B. Gaskets: ASTM C 564, rubber.

2.3 HUBLESS, CAST-IRON SOIL PIPE AND FITTINGS

A. Pipe and Fittings: ASTM A 888 or CISPI 301.

B. Sovent Stack Fittings: ASME B16.45 or ASSE 1043, hubless, cast-iron aerator and deaerator drainage fittings.

C. CISPI, Hubless-Piping Couplings:

1. Manufacturers: Subject to compliance with requirements, provide products by one of the following:

   a. ANACO-Husky.
   b. Fernco Inc.
   c. Matco-Norca, Inc.
   d. Stant.
   e. Tyler Pipe.

2. Standards: ASTM C 1277 and CISPI 310.
3. Description: Stainless-steel corrugated shield with stainless-steel bands and tightening devices; and ASTM C 564, rubber sleeve with integral, center pipe stop.

D. Heavy-Duty, Hubless-Piping Couplings:

1. Manufacturers: Subject to compliance with requirements, provide products by one of the following:

   a. ANACO-Husky.
   b. Clamp-All Corp.
   c. MIFAB, Inc.
   d. Stant.
   e. Tyler Pipe.

2. Standards: ASTM C 1277 and ASTM C 1540.
3. Description: Stainless-steel shield with stainless-steel bands and tightening devices; and ASTM C 564, rubber sleeve with integral, center pipe stop.

2.4 GALVANIZED-STEEL PIPE AND FITTINGS

A. Galvanized-Steel Pipe: ASTM A 53/A 53M, Type E, Standard Weight class. Include square-cut-grooved or threaded ends matching joining method.

B. Galvanized-Cast-Iron Drainage Fittings: ASME B16.12, threaded.

C. Steel Pipe Pressure Fittings:

1. Galvanized Steel Pipe Nipples: ASTM A 733, made of ASTM A 53/A 53M or ASTM A 106/A 106M, Schedule 40, seamless steel pipe. Include ends matching joining method.

2. Malleable-Iron Unions: ASME B16.39; Class 150; hexagonal-stock body with ball-and-socket, metal-to-metal, bronze seating surface; and female threaded ends.
3. Galvanized-Gray-Iron, Threaded Fittings: ASME B16.4, Class 125, standard pattern.

2.5 COPPER TUBE AND FITTINGS

A. Copper DWV Tube: ASTM B 306, drainage tube, drawn temper.

B. Copper Drainage Fittings: ASME B16.23, cast copper or ASME B16.29, wrought copper, solder-joint fittings.

C. Solder: ASTM B 32, lead free with ASTM B 813, water-flushable flux.

2.6 PVC PIPE AND FITTINGS

A. Solid-Wall PVC Pipe: ASTM D 2665, drain, waste, and vent.

B. PVC Socket Fittings: ASTM D 2665, socket type, made to ASTM D 3311, drain waste and vent patterns.

C. PVC Special Fittings: ASTM F 409, drainage-pattern tube and tubular fittings with ends as required for application.

D. Adhesive Primer: ASTM F 656.

1. Adhesive primer shall have a VOC content of 550 g/L or less when calculated according to 40 CFR 59, Subpart D (EPA Method 24).
2. Adhesive primer shall comply with the testing and product requirements of the California Department of Health Services' "Standard Practice for the Testing of Volatile Organic Emissions from Various Sources Using Small-Scale Environmental Chambers."

E. Solvent Cement: ASTM D 2564.

1. PVC solvent cement shall have a VOC content of 510 g/L or less when calculated according to 40 CFR 59, Subpart D (EPA Method 24).
2. Solvent cement shall comply with the testing and product requirements of the California Department of Health Services' "Standard Practice for the Testing of Volatile Organic Emissions from Various Sources Using Small-Scale Environmental Chambers."

2.7 SPECIALTY PIPE FITTINGS

A. Transition Couplings:

1. General Requirements: Fitting or device for joining piping with small differences in OD's or of different materials. Include end connections same size as and compatible with pipes to be joined.
2. Fitting-Type Transition Couplings: Manufactured piping coupling or specified piping system fitting.
3. Unshielded, Nonpressure Transition Couplings:

    a. Manufacturers: Subject to compliance with requirements, provide products by one of the following:

        1) Dallas Specialty & Mfg. Co.
        2) Fernco Inc.
        3) Mission Rubber Company; a division of MCP Industries, Inc.
        4) Plastic Oddities; a division of Diverse Corporate Technologies, Inc.

    b. Standard: ASTM C 1173.
    c. Description: Elastomeric, sleeve-type, reducing or transition pattern. Include shear ring and corrosion-resistant-metal tension band and tightening mechanism on each end.
    d. Sleeve Materials:

        1) For Cast-Iron Soil Pipes: ASTM C 564, rubber.
        2) For Plastic Pipes: ASTM F 477, elastomeric seal or ASTM D 5926, PVC.
        3) For Dissimilar Pipes: ASTM D 5926, PVC or other material compatible with pipe materials being joined.

4. Shielded, Nonpressure Transition Couplings:

    a. Manufacturers: Subject to compliance with requirements, provide products by one of the following:

        1) Cascade Waterworks Mfg. Co.
        2) Mission Rubber Company; a division of MCP Industries, Inc.

    b. Standard: ASTM C 1460.
    c. Description: Elastomeric or rubber sleeve with full-length, corrosion-resistant outer shield and corrosion-resistant-metal tension band and tightening mechanism on each end.

5. Pressure Transition Couplings:

    a. Manufacturers: Subject to compliance with requirements, provide products by one of the following:

        1) Cascade Waterworks Mfg. Co.
        2) Dresser, Inc.
        3) EBAA Iron, Inc.
        4) Romac Industries, Inc.
        5) Viking Johnson.

    b. Standard: AWWA C219.

c. Description: Metal, sleeve-type same size as, with pressure rating at least equal to, and ends compatible with, pipes to be joined.
d. Center-Sleeve Material: Manufacturer's standard
e. Gasket Material: Natural or synthetic rubber.
f. Metal Component Finish: Corrosion-resistant coating or material.

B. Dielectric Fittings:

1. General Requirements: Assembly of copper alloy and ferrous materials with separating nonconductive insulating material. Include end connections compatible with pipes to be joined.
2. Dielectric Unions:

a. Manufacturers: Subject to compliance with requirements, provide products by one of the following:

1) Capitol Manufacturing Company.
2) Central Plastics Company.
3) Matco-Norca, Inc.
4) Watts Regulator Co.; a division of Watts Water Technologies, Inc.
5) Wilkins; a Zurn company.

b. Description:

1) Standard: ASSE 1079.
2) Pressure Rating: 150 psig (1035 kPa).
3) End Connections: Solder-joint copper alloy and threaded ferrous.

3. Dielectric Nipples:

a. Manufacturers: Subject to compliance with requirements, provide products by one of the following:

1) Elster Perfection.
2) Grinnell Mechanical Products.
3) Matco-Norca, Inc.
4) Precision Plumbing Products, Inc.
5) Victaulic Company.

b. Description:

1) Electroplated steel nipple complying with ASTM F 1545.
2) Pressure Rating: 300 psig (2070 kPa) at 225 deg F (107 deg C)
3) End Connections: Male threaded or grooved.
4) Lining: Inert and noncorrosive, propylene.

2.8 ENCASEMENT FOR UNDERGROUND METAL PIPING

A. Standard: ASTM A 674 or AWWA C105/A 21.5.

B. Material: Linear low-density polyethylene film of 0.008-inch (0.20-mm) minimum thickness.

C. Form: Sheet or tube.

D. Color: Black or natural

PART 3 - EXECUTION

3.1 EARTH MOVING

A. Comply with requirements for excavating, trenching, and backfilling specified in Division 31 Section "Earth Moving."

3.2 PIPING INSTALLATION

A. Drawing plans, schematics, and diagrams indicate general location and arrangement of piping systems. Indicated locations and arrangements were used to size pipe and calculate friction loss, expansion, pump sizing, and other design considerations. Install piping as indicated unless deviations to layout are approved on coordination drawings.

B. Install piping in concealed locations unless otherwise indicated and except in equipment rooms and service areas.

C. Install piping indicated to be exposed and piping in equipment rooms and service areas at right angles or parallel to building walls. Diagonal runs are prohibited unless specifically indicated otherwise.

D. Install piping above accessible ceilings to allow sufficient space for ceiling panel removal.

E. Install piping to permit valve servicing.

F. Install piping at indicated slopes.

G. Install piping free of sags and bends.

H. Install fittings for changes in direction and branch connections.

I. Install piping to allow application of insulation.

J. Install seismic restraints on piping. Comply with requirements for seismic-restraint devices specified in Division 22 Section "Vibration and Seismic Controls for Plumbing Piping and Equipment."

K. Make changes in direction for soil and waste drainage and vent piping using appropriate branches, bends, and long-sweep bends. Sanitary tees and short-sweep 1/4 bends may be used on vertical stacks if change in direction of flow is from horizontal to vertical. Use long-turn, double Y-branch and 1/8-bend fittings if two fixtures are installed back to back or side by side with common drain pipe. Straight tees, elbows, and crosses may be used on vent lines. Do not

change direction of flow more than 90 degrees. Use proper size of standard increasers and reducers if pipes of different sizes are connected. Reducing size of drainage piping in direction of flow is prohibited.

L. Lay buried building drainage piping beginning at low point of each system. Install true to grades and alignment indicated, with unbroken continuity of invert. Place hub ends of piping upstream. Install required gaskets according to manufacturer's written instructions for use of lubricants, cements, and other installation requirements. Maintain swab in piping and pull past each joint as completed.

M. Install soil and waste drainage and vent piping at the following minimum slopes unless otherwise indicated:

1. Building Sanitary Drain: 2 percent downward in direction of flow for piping NPS 2-1/2 (DN 65) and smaller; 1 percent downward in direction of flow for piping NPS 3 (DN 80) and larger.

2. Horizontal Sanitary Drainage Piping: 2 percent downward in direction of flow for piping NPS 2-1/2 (DN 65) and smaller; 1 percent downward in direction of flow for piping NPS 3 (DN 80) and larger.
3. Vent Piping: 1 percent down toward vertical fixture vent or toward vent stack.

N. Install cast-iron soil piping according to CISPI's "Cast Iron Soil Pipe and Fittings Handbook," Chapter IV, "Installation of Cast Iron Soil Pipe and Fittings."

1. Install encasement on underground piping according to ASTM A 674 or AWWA C105/A 21.5.

O. Install steel piping according to applicable plumbing code.

P. Install aboveground copper tubing according to CDA's "Copper Tube Handbook."

Q. Install aboveground PVC piping according to ASTM D 2665.

R. Install underground PVC piping according to ASTM D 2321.

S. Install engineered soil and waste drainage and vent piping systems as follows:

1. Combination Waste and Vent: Comply with standards of authorities having jurisdiction.
2. Sovent Drainage System: Comply with ASSE 1043 and sovent fitting manufacturer's written installation instructions.
3. Reduced-Size Venting: Comply with standards of authorities having jurisdiction.

T. Install force mains at elevations indicated.

U. Plumbing Specialties:
1. Install cleanouts at grade and extend to where building sanitary drains connect to building sanitary sewers in sanitary drainage gravity-flow piping. Install cleanout fitting with closure plug inside the building in sanitary drainage force-main piping. Comply with requirements for cleanouts specified in Division 22 Section "Sanitary Waste Piping Specialties."

2. Install drains in sanitary drainage gravity-flow piping. Comply with requirements for drains specified in Division 22 Section "Sanitary Waste Piping Specialties."

V. Do not enclose, cover, or put piping into operation until it is inspected and approved by authorities having jurisdiction.

W. Install sleeves for piping penetrations of walls, ceilings, and floors. Comply with requirements for sleeves specified in Division 22 Section "Common Work Results for Plumbing".

X. Install sleeve seals for piping penetrations of concrete walls and slabs. Comply with requirements for sleeve seals specified in Division 22 Section "Common Work Results for Plumbing".

Y. Install escutcheons for piping penetrations of walls, ceilings, and floors. Comply with requirements for escutcheons specified in Division 22 Section "Common Work Results for Plumbing".

3.3 JOINT CONSTRUCTION

A. Join hub-and-spigot, cast-iron soil piping with gasket joints according to CISPI's "Cast Iron Soil Pipe and Fittings Handbook" for compression joints.

B. Join hub-and-spigot, cast-iron soil piping with calked joints according to CISPI's "Cast Iron Soil Pipe and Fittings Handbook" for lead-and-oakum calked joints.

C. Join hubless, cast-iron soil piping according to CISPI 310 and CISPI's "Cast Iron Soil Pipe and Fittings Handbook" for hubless-piping coupling joints.

D. Threaded Joints: Thread pipe with tapered pipe threads according to ASME B1.20.1. Cut threads full and clean using sharp dies. Ream threaded pipe ends to remove burrs and restore full ID. Join pipe fittings and valves as follows:

1. Apply appropriate tape or thread compound to external pipe threads unless dry seal threading is specified.
2. Damaged Threads: Do not use pipe or pipe fittings with threads that are corroded or damaged. Do not use pipe sections that have cracked or open welds.

E. Join copper tube and fittings with soldered joints according to ASTM B 828. Use ASTM B 813, water-flushable, lead-free flux and ASTM B 32, lead-free-alloy solder.

F. Plastic, Nonpressure-Piping, Solvent-Cement Joints: Clean and dry joining surfaces. Join pipe and fittings according to the following:

1. Comply with ASTM F 402 for safe-handling practice of cleaners, primers, and solvent cements.
2. ABS Piping: Join according to ASTM D 2235 and ASTM D 2661 Appendixes.
3. PVC Piping: Join according to ASTM D 2855 and ASTM D 2665 Appendixes.

3.4 SPECIALTY PIPE FITTING INSTALLATION

A. Transition Couplings:

1. Install transition couplings at joints of piping with small differences in OD's.
2. In Drainage Piping: Shielded, nonpressure transition couplings.
3. In Aboveground Force Main Piping: Fitting-type transition couplings.
4. In Underground Force Main Piping:

   a. NPS 1-1/2 (DN 40) and Smaller: Fitting-type transition couplings.
   b. NPS 2 (DN 50) and Larger: Pressure transition couplings.

B. Dielectric Fittings:

1. Install dielectric fittings in piping at connections of dissimilar metal piping and tubing.
2. Dielectric Fittings for NPS 2 (DN 50) and Smaller: Use dielectric nipples.
3. Dielectric Fittings for NPS 2-1/2 to NPS 4 (DN 65 to DN 100): Use dielectric flanges
4. Dielectric Fittings for NPS 5 (DN 125) and Larger: Use dielectric flange kits.

3.5 VALVE INSTALLATION

A. General valve installation requirements are specified in Division 22 Section "General-Duty Valves for Plumbing Piping."

B. Shutoff Valves:

1. Install shutoff valve on each sewage or effluent pump discharge.
2. Install gate or full-port ball valve for piping NPS 2 (DN 50) and smaller.
3. Install gate valve for piping NPS 2-1/2 (DN 65) and larger.

C. Check Valves: Install non-slam swing check valve, between pump and shutoff valve, on each sewage or effluent pump discharge.

3.6 HANGER AND SUPPORT INSTALLATION

A. Comply with requirements for seismic-restraint devices specified in Division 22 Section "Vibration and Seismic Controls for Plumbing Piping and Equipment."

B. Comply with requirements for pipe hanger and support devices and installation specified in Division 22 Section "Hangers and Supports for Plumbing Piping and Equipment."

1. Install carbon-steel pipe hangers for horizontal piping..
2. Install carbon-steel pipe support clamps for vertical piping in noncorrosive environments.
3. Install stainless-steel pipe support clamps for vertical piping.
4. Vertical Piping: MSS Type 8 or Type 42, clamps.
5. Install individual, straight, horizontal piping runs:

   a. 100 Feet (30 m) and Less: MSS Type 1, adjustable, steel clevis hangers.
   b. Longer Than 100 Feet (30 m): MSS Type 43, adjustable roller hangers.

c. Longer Than 100 Feet (30 m) if Indicated: MSS Type 49, spring cushion rolls.

6. Multiple, Straight, Horizontal Piping Runs 100 Feet (30 m) or Longer: MSS Type 44, pipe rolls. Support pipe rolls on trapeze.
7. Base of Vertical Piping: MSS Type 52, spring hangers.

C. Support horizontal piping and tubing within 12 inches (300 mm) of each fitting, valve, and coupling.

D. Support vertical piping and tubing at base and at each floor.

E. Rod diameter may be reduced one size for double-rod hangers, with 3/8-inch (10-mm) minimum rods.

F. Install hangers for cast-iron soil piping with the following maximum horizontal spacing and minimum rod diameters:

1. NPS 1-1/2 and NPS 2 (DN 40 and DN 50): 60 inches (1500 mm) with 3/8-inch (10-mm) rod.
2. NPS 3 (DN 80): 60 inches (1500 mm) with 1/2-inch (13-mm) rod.
3. NPS 4 and NPS 5 (DN 100 and DN 125): 60 inches (1500 mm) with 5/8-inch (16-mm) rod.
4. NPS 6 and NPS 8 (DN 150 and DN 200): 60 inches (1500 mm) with 3/4-inch (19-mm) rod.
5. NPS 10 and NPS 12 (DN 250 and DN 300): 60 inches (1500 mm) with 7/8-inch (22-mm) rod.
6. Spacing for 10-foot (3-m) lengths may be increased to 10 feet (3 m). Spacing for fittings is limited to 60 inches (1500 mm).

G. Install supports for vertical cast-iron soil piping every 15 feet (4.5 m).

H. Install hangers for steel piping with the following maximum horizontal spacing and minimum rod diameters:

1. NPS 1-1/4 (DN 32): 84 inches (2100 mm) with 3/8-inch (10-mm) rod.
2. NPS 1-1/2 (DN 40): 108 inches (2700 mm) with 3/8-inch (10-mm) rod.
3. NPS 2 (DN 50): 10 feet (3 m) with 3/8-inch (10-mm) rod.
4. NPS 2-1/2 (DN 65): 11 feet (3.4 m) with 1/2-inch (13-mm) rod.
5. NPS 3 (DN 80): 12 feet (3.7 m) with 1/2-inch (13-mm) rod.
6. NPS 4 and NPS 5 (DN 100 and DN 125): 12 feet (3.7 m) with 5/8-inch (16-mm) rod.
7. NPS 6 and NPS 8 (DN 150 and DN 200): 12 feet (3.7 m) with 3/4-inch (19-mm) rod.
8. NPS 10 and NPS 12 (DN 250 and DN 300): 12 feet (3.7 m) with 7/8-inch (22-mm) rod.

I. Install supports for vertical steel piping every 15 feet (4.5 m).

J. Install supports for vertical stainless-steel piping every 10 feet (3 m).

K. Install hangers for copper tubing with the following maximum horizontal spacing and minimum rod diameters:

1. NPS 1-1/4 (DN 32): 72 inches (1800 mm) with 3/8-inch (10-mm) rod.

2. NPS 1-1/2 and NPS 2 (DN 40 and DN 50): 96 inches (2400 mm) with 3/8-inch (10-mm) rod.
3. NPS 2-1/2 (DN 65): 108 inches (2700 mm) with 1/2-inch (13-mm) rod.
4. NPS 3 and NPS 5 (DN 80 and DN 125): 10 feet (3 m) with 1/2-inch (13-mm) rod.
5. NPS 6 (DN 150): 10 feet (3 m) with 5/8-inch (16-mm) rod.
6. NPS 8 (DN 200): 10 feet (3 m) with 3/4-inch (19-mm) rod.

L. Install supports for vertical copper tubing every 10 feet (3 m).

M. Install hangers for PVC piping with the following maximum horizontal spacing and minimum rod diameters:

1. NPS 1-1/2 and NPS 2 (DN 40 and DN 50): 48 inches (1200 mm) with 3/8-inch (10-mm) rod.
2. NPS 3 (DN 80): 48 inches (1200 mm) with 1/2-inch (13-mm) rod.
3. NPS 4 and NPS 5 (DN 100 and DN 125): 48 inches (1200 mm) with 5/8-inch (16-mm) rod.
4. NPS 6 and NPS 8 (DN 150 and DN 200): 48 inches (1200 mm) with 3/4-inch (19-mm) rod.
5. NPS 10 and NPS 12 (DN 250 and DN 300): 48 inches (1200 mm) with 7/8-inch (22-mm) rod.

N. Install supports for vertical PVC piping every 48 inches (1200 mm).

O. Support piping and tubing not listed above according to MSS SP-69 and manufacturer's written instructions.

3.7 CONNECTIONS

A. Drawings indicate general arrangement of piping, fittings, and specialties.

B. Connect soil and waste piping to exterior sanitary sewerage piping. Use transition fitting to join dissimilar piping materials.

C. Connect drainage and vent piping to the following:

1. Plumbing Fixtures: Connect drainage piping in sizes indicated, but not smaller than required by plumbing code.
2. Plumbing Fixtures and Equipment: Connect atmospheric vent piping in sizes indicated, but not smaller than required by authorities having jurisdiction.
3. Plumbing Specialties: Connect drainage and vent piping in sizes indicated, but not smaller than required by plumbing code.
4. Install test tees (wall cleanouts) in conductors near floor and floor cleanouts with cover flush with floor.
5. Comply with requirements for cleanouts and drains specified in Division 22 Section "Sanitary Waste Piping Specialties."
6. Equipment: Connect drainage piping as indicated. Provide shutoff valve if indicated and union for each connection. Use flanges instead of unions for connections NPS 2-1/2 (DN 65) and larger.

D. Connect force-main piping to the following:

1. Sewage or Effluent Pump: To sewage or effluent pump discharge.

E. Where installing piping adjacent to equipment, allow space for service and maintenance of equipment.

F. Make connections according to the following unless otherwise indicated:

1. Install unions, in piping NPS 2 (DN 50) and smaller, adjacent to each valve and at final connection to each piece of equipment.
2. Install flanges, in piping NPS 2-1/2 (DN 65) and larger, adjacent to flanged valves and at final connection to each piece of equipment.

3.8 IDENTIFICATION

A. Identify exposed sanitary waste and vent piping. Comply with requirements for identification specified in Division 22 Section "Identification for Plumbing Piping and Equipment."

3.9 FIELD QUALITY CONTROL

A. During installation, notify authorities having jurisdiction at least 24 hours before inspection must be made. Perform tests specified below in presence of authorities having jurisdiction.

1. Roughing-in Inspection: Arrange for inspection of piping before concealing or closing-in after roughing-in and before setting fixtures.
2. Final Inspection: Arrange for final inspection by authorities having jurisdiction to observe tests specified below and to ensure compliance with requirements.

B. Reinspection: If authorities having jurisdiction find that piping will not pass test or inspection, make required corrections and arrange for reinspection.

C. Reports: Prepare inspection reports and have them signed by authorities having jurisdiction.

D. Test sanitary drainage and vent piping according to procedures of authorities having jurisdiction or, in absence of published procedures, as follows:

1. Test for leaks and defects in new piping and parts of existing piping that have been altered, extended, or repaired. If testing is performed in segments, submit separate report for each test, complete with diagram of portion of piping tested.
2. Leave uncovered and unconcealed new, altered, extended, or replaced drainage and vent piping until it has been tested and approved. Expose work that was covered or concealed before it was tested.
3. Roughing-in Plumbing Test Procedure: Test drainage and vent piping except outside leaders on completion of roughing-in. Close openings in piping system and fill with water to point of overflow, but not less than 10-foot head of water (30 kPa). From 15 minutes before inspection starts to completion of inspection, water level must not drop. Inspect joints for leaks.

4. Finished Plumbing Test Procedure: After plumbing fixtures have been set and traps filled with water, test connections and prove they are gastight and watertight. Plug vent-stack openings on roof and building drains where they leave building. Introduce air into piping system equal to pressure of 1-inch wg (250 Pa). Use U-tube or manometer inserted in trap of water closet to measure this pressure. Air pressure must remain constant without introducing additional air throughout period of inspection. Inspect plumbing fixture connections for gas and water leaks.
5. Repair leaks and defects with new materials and retest piping, or portion thereof, until satisfactory results are obtained.
6. Prepare reports for tests and required corrective action.

E. Test force-main piping according to procedures of authorities having jurisdiction or, in absence of published procedures, as follows:

1. Leave uncovered and unconcealed new, altered, extended, or replaced force-main piping until it has been tested and approved. Expose work that was covered or concealed before it was tested.
2. Cap and subject piping to static-water pressure of 50 psig (345 kPa) above operating pressure, without exceeding pressure rating of piping system materials. Isolate test source and allow to stand for four hours. Leaks and loss in test pressure constitute defects that must be repaired.
3. Repair leaks and defects with new materials and retest piping, or portion thereof, until satisfactory results are obtained.
4. Prepare reports for tests and required corrective action.

3.10 CLEANING AND PROTECTION

A. Clean interior of piping. Remove dirt and debris as work progresses.

B. Protect drains during remainder of construction period to avoid clogging with dirt and debris and to prevent damage from traffic and construction work.

C. Place plugs in ends of uncompleted piping at end of day and when work stops.

D. Exposed PVC Piping: Protect plumbing vents exposed to sunlight with two coats of water-based latex paint.

3.11 PIPING SCHEDULE

A. Flanges and unions may be used on aboveground pressure piping unless otherwise indicated.

B. Where plastic piping is listed as an accepted pipe material in the schedules:
1. It shall be permitted <u>except</u> in air plenums and any other areas where prohibited by code or authority having jurisdiction.
2. It shall be permitted <u>except</u> where connected to and within 10 lineal feet of equipment generating high temperature waste (greater than 120 degF).

C. Aboveground, soil and waste piping NPS 4 (DN 100) and smaller shall be any of the following:

1. Hubless, cast-iron soil pipe and fittings; CISPI hubless-piping couplings; and coupled joints.
2. Copper DWV tube, copper drainage fittings, and soldered joints.
3. Solid wall PVC pipe, PVC socket fittings, and solvent-cemented joints.
4. Dissimilar Pipe-Material Couplings: Shielded, non-pressure transition couplings.

D. Aboveground, soil and waste piping NPS 5 (DN 125) and larger shall be any of the following:

1. Hubless, cast-iron soil pipe and fittings; CISPI hubless-piping couplings; and coupled joints.
2. Solid-wall PVC pipe, PVC socket fittings, and solvent-cemented joints.
3. Dissimilar Pipe-Material Couplings: Shielded, nonpressure transition couplings.

E. Aboveground, vent piping NPS 4 (DN 100) and smaller shall be any of the following:

1. Hubless, cast-iron soil pipe and fittings; CISPI hubless-piping couplings; and coupled joints.
2. Copper DWV tube, copper drainage fittings, and soldered joints.
3. Solid-wall PVC pipe, PVC socket fittings, and solvent-cemented joints.
4. Dissimilar Pipe-Material Couplings: Shielded nonpressure transition couplings.

F. Underground, soil, waste, and vent piping NPS 4 (DN 100) and shall be any of the following:

1. Service class, cast-iron soil piping; gaskets; and gasketed joints.
2. Hubless, cast-iron soil pipe and fittings; CISPI heavy duty hubless-piping couplings; and coupled joints.
3. Solid wall PVC pipe, PVC socket fittings, and solvent-cemented joints.
4. Dissimilar Pipe-Material Couplings: Shielded, nonpressure transition couplings.

G. Underground, soil and waste piping NPS 5 (DN 125) and larger shall be any of the following:

1. Service class, cast-iron soil piping; gaskets; and gasketed joints.
2. Hubless, cast-iron soil pipe and fittings; CISPI heavy-duty hubless-piping couplings; coupled joints.
3. Solid-wall PVC pipe; PVC socket fittings; and solvent-cemented joints.
4. Dissimilar Pipe-Material Couplings: Shielded, nonpressure transition couplings.

H. Aboveground sanitary-sewage force mains NPS 1-1/2 and NPS 2 (DN 40 and DN 50) shall be the following:

1. Galvanized-steel pipe, pressure fittings, and threaded joints.

I. Aboveground, (cold) condensate drain piping NPS 4 (DN 100) and smaller shall be the following:

1. Solid wall PVC pipe, PVC socket fittings, and solvent-cemented joints.
2. Dissimilar Pipe-Material Couplings: Shielded, non-pressure transition couplings.

END OF SECTION 221316

SECTION 221319 - SANITARY WASTE PIPING SPECIALTIES

PART 1 - GENERAL

1.1 RELATED DOCUMENTS

A. Drawings and general provisions of the Contract, including General and Supplementary Conditions and Division 01 Specification Sections, apply to this Section.

1.2 SUMMARY

A. This Section includes the following sanitary drainage piping specialties:

1. Cleanouts.
2. Floor drains.
3. Floor sinks.
4. Air-admittance valves.
5. Miscellaneous sanitary drainage piping specialties.

B. Related Sections include the following:

1. Section 221423 "Storm Drainage Piping Specialties" for roof drains.

1.3 DEFINITIONS

A. ABS: Acrylonitrile-butadiene-styrene plastic.

B. FRP: Fiberglass-reinforced plastic.

C. HDPE: High-density polyethylene plastic.

D. PE: Polyethylene plastic.

E. PP: Polypropylene plastic.

F. PVC: Polyvinyl chloride plastic.

1.4 SUBMITTALS

A. Product Data: For each type of product indicated. Include rated capacities, operating characteristics, and accessories for the following:

1. Cleanouts.
2. Floor drains.
3. Floor sinks.
4. Air-admittance valves

B. Operation and Maintenance Data: For drainage piping specialties to include in emergency, operation, and maintenance manuals.

1.5 QUALITY ASSURANCE

A. Drainage piping specialties shall bear label, stamp, or other markings of specified testing agency.

B. Comply with NSF 14, "Plastics Piping Components and Related Materials," for plastic sanitary piping specialty components.

1.6 COORDINATION

A. Coordinate size and location of concrete bases. Cast anchor-bolt inserts into bases. Concrete, reinforcement, and formwork requirements are specified in Division 03.

B. Coordinate size and location of roof penetrations.

PART 2 - PRODUCTS

2.1 CLEANOUTS

A. Exposed Metal Cleanouts (CO):

1. Manufacturers: Subject to compliance with requirements, provide products by one (1) of the following:

   a. Josam Company; Josam Div.
   b. MIFAB, Inc.
   c. Smith, Jay R. Mfg. Co.; Division of Smith Industries, Inc.
   d. Watts Drainage Products Inc.
   e. Zurn Plumbing Products Group; Specification Drainage Operation

2. Standard: ASME A112.36.2M for cleanout test tee.
3. Size: Same as connected drainage piping
4. Body Material: Hubless, cast-iron soil pipe test tee as required to match connected piping.
5. Closure: Countersunk brass plug.
6. Closure Plug Size: Same as or not more than one size smaller than cleanout size.
7. Closure: Stainless-steel plug with seal.

B. Metal Floor Cleanouts (FCO):

1. Manufacturers: Subject to compliance with requirements, provide products by one (1) of the following:

   a. Josam Company; Josam Div.
   b. Smith, Jay R. Mfg. Co.; Division of Smith Industries, Inc.
   c. Tyler Pipe; Wade Div.
   d. Watts Drainage Products Inc.
   e. Zurn Plumbing Products Group; Specification Drainage Operation

2. Standard: ASME A112.36.2M for threaded, adjustable housing cleanout.
3. Size: Same as connected branch.

4. Type: Threaded, adjustable housing.
5. Body or Ferrule: Cast iron.
6. Clamping Device: Required.
7. Outlet Connection: Inside calk.
8. Closure: Brass plug with tapered threads.
9. Adjustable Housing Material: Cast iron with set-screws or other device.
10. Frame and Cover Material and Finish: Polished bronze.
11. Frame and Cover Shape: Round.
12. Top Loading Classification: Medium Duty, unless otherwise noted on drawing schedules.
13. Riser: ASTM A 74, Service class, cast-iron drainage pipe fitting and riser to cleanout.

C. Cast-Iron Wall Cleanouts (WCO):

1. Manufacturers: Subject to compliance with requirements, provide products by one (1) of the following:

   a. Josam Company; Josam Div.
   b. Smith, Jay R. Mfg. Co.; Division of Smith Industries, Inc.
   c. Tyler Pipe; Wade Div.
   d. Watts Drainage Products Inc.
   e. Zurn Plumbing Products Group; Specification Drainage Operation

2. Standard: ASME A112.36.2M. Include wall access.
3. Size: Same as connected drainage piping.
4. Body: Hubless, cast-iron soil pipe test tee as required to match connected piping.
5. Closure: Countersunk brass plug.
6. Closure Plug Size: Same as or not more than one (1) size smaller than cleanout size.
7. Wall Access: Square stainless-steel wall-installation frame and cover.

2.2 FLOOR DRAINS

A. Floor Drains (FD):

1. Manufacturers: Subject to compliance with requirements, provide products by one (1) of the following:

   a. Josam Company; Josam Div.
   b. MIFAB, Inc.
   c. Smith, Jay R. Mfg. Co.; Division of Smith Industries, Inc.
   d. Tyler Pipe; Wade Div.
   e. Zurn Plumbing Products Group; Specification Drainage Operation

B. Refer to Plumbing Specialty Components schedule on the drawings for requirements for specific floor drain types.

2.3 FLOOR SINKS

A. Floor Sinks (FS):

1. Manufacturers: Subject to compliance with requirements, provide products by one (1) of the following:

a. Josam Company; Josam Div.
b. MIFAB, Inc.
c. Smith, Jay R. Mfg. Co.; Division of Smith Industries, Inc.
d. Tyler Pipe; Wade Div.
e. Zurn Plumbing Products Group; Specification Drainage Operation

B. Refer to Plumbing Specialty Components schedule on the drawings for requirements for specific floor sink types.

2.4 THROUGH-PENETRATION FIRESTOP ASSEMBLIES

A. Through-Penetration Firestop Assemblies:

1. Manufacturers: Subject to compliance with requirements, provide products by one (1) of the following:

a. ProSet Systems Inc.

2. Standard: ASTM E 814, for through-penetration firestop assemblies.
3. Certification and Listing: from testing agency acceptable to authorities having jurisdiction for through-penetration firestop assemblies.
4. Size: Same as connected pipe.
5. Sleeve: Molded PVC plastic, of length to match slab thickness and with integral nailing flange on one end for installation in cast-in-place concrete slabs.
6. Stack Fitting: ASTM A 48, gray-iron, hubless-pattern, wye branch with neoprene O-ring at base and gray-iron plug in thermal-release harness. Include PVC protective cap for plug.
7. Special Coating: Corrosion resistant on interior of fittings.

2.5 FLASHING MATERIALS

A. Copper Sheet: ASTM B 152, 12 oz./sq. ft.

B. Zinc-Coated Steel Sheet: ASTM A 653, with 0.20 percent copper content and 0.04-inch minimum thickness unless otherwise indicated. Include G90 hot-dip galvanized, mill-phosphatized finish for painting if indicated.

C. Elastic Membrane Sheet: ASTM D 4068, flexible, chlorinated polyethylene, 40-mil minimum thickness.

D. Fasteners: Metal compatible with material and substrate being fastened.

E. Metal Accessories: Sheet metal strips, clamps, anchoring devices, and similar accessory units required for installation; matching or compatible with material being installed.

F. Solder: ASTM B 32, lead-free alloy.

2.6 AIR-ADMITTANCE VALVES

A. Fixture Air-Admittance Valves (AAV):

1. Manufacturers: Subject to compliance with requirements, provide products by one (1) of the following:

    a. Durgo, Inc.
    b. Oatey
    c. RectorSeal
    d. Studor, Inc.

2. Standard: ASSE 1051, Type A for single fixture or Type B for branch piping.
3. Housing: Plastic.
4. Operation: Mechanical sealing diaphragm.
5. Size: Same as connected fixture or branch vent piping.

B. Wall Box (for concealed Air Admittance Valves):

1. Manufacturers: Subject to compliance with requirements, provide products by one (1) of the following:

    a. Durgo, Inc.
    b. Oatey
    c. RectorSeal
    d. Studor, Inc.

2. Description: White plastic housing with white plastic grille, made for recessed installation. Include bottom pipe connection and space to contain one air-admittance valve.
3. Size: About 9 inches wide by 8 inches high by 4 inches deep.

2.7 ROOF FLASHING ASSEMBLIES

A. Requirements:

1. Refer to Division 7 – Thermal and Moisture Protection sections, and Architectural roofing details.

2.8 MISCELLANEOUS SANITARY DRAINAGE PIPING SPECIALTIES

A. Open Drains (Hub Drain)

1. Description: Shop or field fabricate from ASTM A 74, Service class, hub-and-spigot, cast-iron, soil-pipe fittings. Include P-trap, hub-and-spigot riser section; and where required, increaser fitting joined with ASTM C 564, rubber gaskets.
2. Size: Same as connected waste piping, unless specifically noted with increaser fitting of size indicated.

B. Expansion Joints:

1. Standard: ASME A112.21.2M.
2. Body: Cast iron with bronze sleeve, packing, and gland.
3. End Connections: Matching connected piping.
4. Size: Same as connected soil, waste, or vent piping.

C. Seismic Expansion Joints:

1. Manufacturers: Subject to compliance with requirements, provide products by one (1) of the following:

   a. EBAA Iron Sales, Inc.

2. Type: Double Ball.
3. Basis of Design: EBAA Iron Sales, Inc., **FLEX-TEND**
4. Installation: In strict accordance with manufacturer's requirements, including restraint of piping on both sides of the joint, isolation of axial expansion forces, installation of hangers and supports, etc.
5. End Connections: Matching connected piping.
6. Size: Same as connected soil, waste, or vent piping.

PART 3 - EXECUTION

3.1 INSTALLATION

A. Refer to Section 220500 "Common Work Results for Plumbing" for piping joining materials, joint construction, and basic installation requirements.

B. Install cleanouts in aboveground piping and building drain piping according to the following, unless otherwise indicated:

1. Size same as drainage piping up to NPS 4 (DN 100). Use NPS 4 (DN 100) for larger drainage piping unless larger cleanout is indicated.
2. Locate at each change in direction of piping greater than 45 degrees.
3. Locate at minimum intervals of 50 feet for piping NPS 4 (DN 100) and smaller and 100 feet for larger piping.
4. Locate at base of each vertical soil and waste stack.

C. For floor cleanouts for piping below floors, install cleanout deck plates with top flush with finished floor.

D. For cleanouts located in concealed piping, install cleanout wall access covers, of types indicated, with frame and cover flush with finished wall.

E. Install floor drains at low points of surface areas to be drained. Set grates of drains flush with finished floor, unless otherwise indicated.

1. Position floor drains for easy access and maintenance.
2. Set floor drains below elevation of surrounding finished floor to allow floor drainage. Set with grates depressed according to the following drainage area radii:

   a. Radius, 30 Inches or Less: Equivalent to one percent (1%) slope, but not less than ¼-inch total depression.
   b. Radius, 30 to 60 Inches: Equivalent to one percent (1%) slope.
   c. Radius, 60 Inches or Larger: Equivalent to one percent (1%) slope, but not greater than 1-inch total depression.

3. Install floor-drain and floor sink flashing collar or flange so no leakage occurs between drain/sink and adjoining flooring. Maintain integrity of waterproof membranes where penetrated.
4. Install individual traps for floor drains and floor sinks connected to sanitary building drain, unless otherwise indicated.

F. Install fixture air-admittance valves on fixture drain piping where indicated.

G. Install air-admittance-valve wall boxes recessed in wall.

H. Install roof flashing assemblies on sanitary stack vents and vent stacks that extend through roof, in accordance with Architectural roof details and specifications.

I. Install flashing fittings on sanitary stack vents and vent stacks that extend through roof. In accordance with Architectural roof details and specifications.

J. Install through-penetration firestop assemblies in plastic conductors at floor penetrations.

K. Assemble open drain fittings and install with top of hub 2 inches above floor.

L. Install deep-seal traps on floor drains and other waste outlets, if indicated.

M. Install trap primer connection on inlet to each floor drain and floor sink, with piping from trap primer valve/distribution unit.

N. Install air-gap fittings on draining-type backflow preventers and on indirect-waste piping discharge into sanitary drainage system.

O. Install sleeve flashing device with each riser and stack passing through floors with waterproof membrane.

P. Install expansion joints on vertical stacks and conductors. Position expansion joints for easy access and maintenance.

Q. Install expansion joints where piping crosses building expansion joints.

R. Install seismic expansion joints where piping crosses building seismic expansion joints.

S. Install wood-blocking reinforcement for wall-mounting-type specialties.

T. Install traps on plumbing specialty drain outlets. Omit traps on indirect wastes unless trap is indicated.

3.2 CONNECTIONS

A. Piping installation requirements are specified in other Division 22 Sections. Drawings indicate general arrangement of piping, fittings, and specialties.

B. Install piping adjacent to equipment to allow service and maintenance.

3.3 FLASHING INSTALLATION

A. Fabricate flashing from single piece unless large pans, sumps, or other drainage shapes are required. Join flashing according to the following if required:

1. Lead Sheets: Burn joints of lead sheets 6.0-lb/sq. ft., 0.0938-inch thickness or thicker. Solder joints of lead sheets 4.0-lb/sq. ft., 0.0625-inch thickness or thinner.
2. Copper Sheets: Solder joints of copper sheets.

B. Install sheet flashing on pipes, sleeves, and specialties passing through or embedded in floors and roofs with waterproof membrane.

1. Pipe Flashing: Sleeve type, matching pipe size, with minimum length of 10 inches, and skirt or flange extending at least 8 inches around pipe.
2. Sleeve Flashing: Flat sheet, with skirt or flange extending at least 8 inches around sleeve.
3. Embedded Specialty Flashing: Flat sheet, with skirt or flange extending at least 8 inches around specialty.

C. Set flashing on floors and roofs in solid coating of bituminous cement.

D. Secure flashing into sleeve and specialty clamping ring or device.

E. Install flashing for piping passing through roofs with counterflashing or commercially made flashing fittings, according to Section 076200 "Sheet Metal Flashing and Trim."

F. Extend flashing up vent pipe passing through roofs and turn down into pipe, or secure flashing into cast-iron sleeve having calking recess; refer also to Architectural roof details and specifications.

G. Fabricate and install flashing and pans, sumps, and other drainage shapes.

3.4 FIELD QUALITY CONTROL

A. Perform tests and inspections and prepare test reports.

B. Tests and Inspections:

1. Leak Test: After installation, charge drainage system and test for leaks. Repair leaks and retest until no leaks exist.

3.5 PROTECTION

A. Protect drains during remainder of construction period to avoid clogging with dirt or debris and to prevent damage from traffic or construction work.

B. Place plugs in ends of uncompleted piping at end of each day or when work stops.

END OF SECTION 221319

SECTION 221329 - SANITARY SEWERAGE PUMPS

PART 1 - GENERAL

1.1 RELATED DOCUMENTS

A. Drawings and general provisions of the Contract, including General and Supplementary Conditions and Division 01 Specification Sections, apply to this Section.

1.2 SUMMARY

A. Section Includes:

1. Submersible effluent pumps.
2. Effluent pump basins and basin covers.

1.3 SUBMITTALS

A. Product Data: For each type of product indicated. Include rated capacities, operating characteristics, electrical characteristics, and furnished specialties and accessories.

B. Wiring Diagrams: For power, signal, and control wiring.

C. Operation and Maintenance Data: For pumps and controls, to include in operation and maintenance manuals.

1.4 QUALITY ASSURANCE

A. Electrical Components, Devices, and Accessories: Listed and labeled as defined in NFPA 70, by a qualified testing agency, and marked for intended location and application.

B. UL Compliance: Comply with UL 778 for motor-operated water pumps.

1.5 DELIVERY, STORAGE, AND HANDLING

A. Retain shipping flange protective covers and protective coatings during storage.

B. Protect bearings and couplings against damage.

C. Comply with pump manufacturer's written rigging instructions for handling.

PART 2 - PRODUCTS

2.1 SUBMERSIBLE EFFLUENT PUMPS

A. Submersible Effluent Pump (SP-1):

1. Basis-of-Design Product: Refer to Pump schedule on the drawings for basis of design product and requirements.

2.2 EFFLUENT PUMP BASINS AND BASIN COVERS

A. Basin and Basin Cover (for SP-1):

1. Basis-of-Design Products: Refer to Pump schedule on the drawings for basis of design products and requirements.

PART 3 - EXECUTION

3.1 EARTHWORK

A. Excavation and filling are specified in Division 31 Section "Earth Moving."

3.2 EXAMINATION

A. Examine roughing-in for plumbing piping to verify actual locations of sanitary drainage and vent piping connections before sewage pump installation.

3.3 INSTALLATION

3.4 CONNECTIONS

A. Comply with requirements for piping specified in Division 22 Section "Sanitary Waste and Vent Piping." Drawings indicate general arrangement of piping, fittings, and specialties.

B. Install piping adjacent to equipment to allow service and maintenance.

3.5 FIELD QUALITY CONTROL

A. Manufacturer's Field Service: Engage a factory-authorized service representative to inspect, test, and adjust components, assemblies, and equipment installations, including connections.

B. Perform tests and inspections.

1. Manufacturer's Field Service: Engage a factory-authorized service representative to inspect components, assemblies, and equipment installations, including connections, and to assist in testing.

C. Tests and Inspections:

1. Perform each visual and mechanical inspection.
2. Leak Test: After installation, charge system and test for leaks. Repair leaks and retest until no leaks exist.
3. Operational Test: After electrical circuitry has been energized, start units to confirm proper motor rotation and unit operation.
4. Test and adjust controls and safeties. Replace damaged and malfunctioning controls and equipment.

D. Pumps and controls will be considered defective if they do not pass tests and inspections.

E. Prepare test and inspection reports.

3.6 STARTUP SERVICE

A. Engage a factory-authorized service representative to perform startup service.

1. Complete installation and startup checks according to manufacturer's written instructions.

3.7 ADJUSTING

A. Adjust pumps to function smoothly, and lubricate as recommended by manufacturer.

B. Adjust control set points.

3.8 DEMONSTRATION

A. Train Owner's maintenance personnel to adjust, operate, and maintain controls and pumps.

END OF SECTION 221329

SECTION 221413 - FACILITY STORM DRAINAGE PIPING

PART 1 - GENERAL

1.1 RELATED DOCUMENTS

A. Drawings and general provisions of the Contract, including General and Supplementary Conditions and Division 01 Specification Sections, apply to this Section.

1.2 SUMMARY

A. Section Includes:

1. Pipe, tube, and fittings.
2. Specialty pipe fittings.
3. Encasement for underground metal piping.

B. Related Sections:

1. Division 33 Section "Storm Utility Drainage Piping" for storm drainage piping outside the building.

1.3 PERFORMANCE REQUIREMENTS

A. Components and installation shall be capable of withstanding the following minimum working pressure unless otherwise indicated:

1. Storm Drainage Piping: 10-foot head of water.

B. Seismic Performance: Storm drainage piping and support and installation shall withstand the effects of earthquake motions determined according to State of Connecticut Building Code.

1.4 SUBMITTALS

A. Product Data: For each type of product indicated.

B. HPBS Submittals:

1. Product Data for Section 16a-38k-5(d): For solvent cements and adhesive primers, documentation including printed statement of VOC content.
2. Laboratory Test Reports for Section 16a-38k-5(d): For solvent cements and adhesive primers, documentation indicating that products comply with the testing and product requirements of the California Department of Health Services' "Standard Practice for the

Testing of Volatile Organic Emissions from Various Sources Using Small-Scale Environmental Chambers."

C. Seismic Qualification Certificates: For storm drainage piping, accessories, and components, from manufacturer.

1. Basis for Certification: Indicate whether withstand certification is based on actual test of assembled components or on calculation.
2. Detailed description of equipment anchorage devices on which the certification is based and their installation requirements.

D. Field quality-control reports.

1.5 QUALITY ASSURANCE

A. Piping materials shall bear label, stamp, or other markings of specified testing agency.

B. Comply with NSF/ANSI 14, "Plastics Piping System Components and Related Materials," for plastic piping components. Include marking with "NSF-drain" for plastic drain piping and "NSF-sewer" for plastic sewer piping.

1.6 PROJECT CONDITIONS

A. Interruption of Existing Storm-Drainage Service: Do not interrupt service to facilities occupied by Owner or others unless permitted under the following conditions and then only after arranging to provide temporary service according to requirements indicated:

1. Notify Construction Manager no fewer than seven days in advance of proposed interruption of storm-drainage service.
2. Do not proceed with interruption of storm-drainage service without Construction Manager's written permission.

PART 2 - PRODUCTS

2.1 PIPING MATERIALS

A. Comply with requirements in "Piping Schedule" Article for applications of pipe, tube, fitting materials, and joining methods for specific services, service locations, and pipe sizes.

2.2 HUB-AND-SPIGOT, CAST-IRON SOIL PIPE AND FITTINGS

A. Pipe and Fittings: ASTM A 74, Service class.

B. Gaskets: ASTM C 564, rubber.

2.3 HUBLESS, CAST-IRON SOIL PIPE AND FITTINGS

A. Pipe and Fittings: ASTM A 888 or CISPI 301.

B. CISPI, Hubless-Piping Couplings:

1. Manufacturers: Subject to compliance with requirements, provide products by one of the following:

   a. ANACO-Husky.
   b. Fernco Inc.
   c. Mission Rubber Company; a division of MCP Industries, Inc.
   d. Stant.
   e. Tyler Pipe.

2. Standards: ASTM C 1277 and CISPI 310.
3. Description: Stainless-steel corrugated shield with stainless-steel bands and tightening devices; and ASTM C 564, rubber sleeve with integral, center pipe stop.

C. Heavy-Duty, Hubless-Piping Couplings:

1. Manufacturers: Subject to compliance with requirements, provide products by one of the following:

   a. ANACO-Husky.
   b. MIFAB, Inc.
   c. Mission Rubber Company; a division of MCP Industries, Inc.
   d. Stant.
   e. Tyler Pipe.

2. Standards: ASTM C 1277 and ASTM C 1540.
3. Description: Stainless-steel shield with stainless-steel bands and tightening devices; and ASTM C 564, rubber sleeve with integral, center pipe stop.

2.4 PVC PIPE AND FITTINGS

A. Solid-Wall PVC Pipe: ASTM D 2665, drain, waste, and vent.

B. PVC Socket Fittings: ASTM D 2665, made to ASTM D 3311, drain, waste, and vent patterns and to fit Schedule 40 pipe.

C. Adhesive Primer: ASTM F 656.

1. Adhesive primer shall have a VOC content of 550 g/L or less when calculated according to 40 CFR 59, Subpart D (EPA Method 24).
2. Adhesive primer shall comply with the testing and product requirements of the California Department of Health Services' "Standard Practice for the Testing of Volatile Organic Emissions from Various Sources Using Small-Scale Environmental Chambers."

D. Solvent Cement: ASTM D 2564.

1. PVC solvent cement shall have a VOC content of 510 g/L or less when calculated according to 40 CFR 59, Subpart D (EPA Method 24).
2. Solvent cement shall comply with the testing and product requirements of the California Department of Health Services' "Standard Practice for the Testing of Volatile Organic Emissions from Various Sources Using Small-Scale Environmental Chambers."

PART 3 - EXECUTION

3.1 EARTH MOVING

A. Comply with requirements for excavating, trenching, and backfilling specified in Division 31 Section "Earth Moving."

3.2 PIPING INSTALLATION

A. Drawing plans, schematics, and diagrams indicate general location and arrangement of piping systems. Indicated locations and arrangements were used to size pipe and calculate friction loss, expansion, and other design considerations. Install piping as indicated unless deviations from layout are approved on coordination drawings.

B. Install piping in concealed locations unless otherwise indicated and except in equipment rooms and service areas.

C. Install piping indicated to be exposed and piping in equipment rooms and service areas at right angles or parallel to building walls. Diagonal runs are prohibited unless specifically indicated otherwise.

D. Install piping above accessible ceilings to allow sufficient space for ceiling panel removal.

E. Install piping to permit valve servicing.

F. Install piping at indicated slopes.

G. Install piping free of sags and bends.

H. Install fittings for changes in direction and branch connections.

I. Install piping to allow application of insulation.

J. Install seismic restraints on piping. Comply with requirements for seismic-restraint devices specified in Division 22 Section "Vibration and Seismic Controls for Plumbing Piping and Equipment."

K. Make changes in direction for storm drainage piping using appropriate branches, bends, and long-sweep bends. Do not change direction of flow more than 90 degrees. Use proper size of standard increasers and reducers if pipes of different sizes are connected. Reducing size of drainage piping in direction of flow is prohibited.

L. Lay buried building storm drainage piping beginning at low point of each system. Install true to grades and alignment indicated, with unbroken continuity of invert. Place hub ends of piping upstream. Install required gaskets according to manufacturer's written instructions for use of lubricants, cements, and other installation requirements. Maintain swab in piping and pull past each joint as completed.

M. Install storm drainage piping at the following minimum slopes unless otherwise indicated:

1. Building Storm Drain: ¼” per foot downward in direction of flow for piping less than NPS 3 (DN 80); 1/8” per foot downward in direction of flow for piping NPS 3 (DN 80) and larger.
2. Horizontal Storm-Drainage Piping: ¼” per foot downward in direction of flow.

N. Install cast-iron soil piping according to CISPI's "Cast Iron Soil Pipe and Fittings Handbook," Chapter IV, "Installation of Cast Iron Soil Pipe and Fittings."

O. Install aboveground PVC piping according to ASTM D 2665.

P. Install underground PVC piping according to ASTM D 2321.

Q. Plumbing Specialties:
1. Install cleanouts at grade and extend to where building storm drains connect to building storm sewers in storm drainage gravity-flow piping. Install cleanout fitting with closure plug inside the building in storm drainage force-main piping. Comply with requirements for cleanouts specified in Division 22 Section "Storm Drainage Piping Specialties."
2. Install drains in storm drainage gravity-flow piping. Comply with requirements for drains specified in Division 22 Section "Storm Drainage Piping Specialties."

R. Do not enclose, cover, or put piping into operation until it is inspected and approved by authorities having jurisdiction.

S. Install sleeves for piping penetrations of walls, ceilings, and floors. Comply with requirements for sleeves specified in Division 22 Section "Common Work Results for Plumbing".

T. Install sleeve seals for piping penetrations of concrete walls and slabs. Comply with requirements for sleeve seals specified in Division 22 Section "Common Work Results for Plumbing."

U. Install escutcheons for piping penetrations of walls, ceilings, and floors. Comply with requirements for escutcheons specified in Division 22 Section "Common Work Results for Plumbing."

3.3 JOINT CONSTRUCTION

A. Hub-and-Spigot, Cast-Iron Soil Piping Gasketed Joints: Join according to CISPI's "Cast Iron Soil Pipe and Fittings Handbook" for compression joints.

B. Hubless, Cast-Iron Soil Piping Coupled Joints: Join according to CISPI 310 and CISPI's "Cast Iron Soil Pipe and Fittings Handbook" for hubless-piping coupling joints.

C. Plastic, Nonpressure-Piping, Solvent-Cemented Joints: Clean and dry joining surfaces. Join pipe and fittings according to the following:

1. Comply with ASTM F 402 for safe-handling practice of cleaners, primers, and solvent cements.
2. ABS Piping: Join according to ASTM D 2235 and ASTM D 2661 Appendixes.
3. PVC Piping: Join according to ASTM D 2855 and ASTM D 2665 Appendixes.

3.4 HANGER AND SUPPORT INSTALLATION

A. Comply with requirements for seismic-restraint devices specified in Division 22 Section "Vibration and Seismic Controls for Plumbing Piping and Equipment."

B. Comply with requirements for pipe hanger and support devices and installation specified in Division 22 Section "Hangers and Supports for Plumbing Piping and Equipment."

1. Install carbon-steel pipe hangers for horizontal piping in noncorrosive environments.
2. Install stainless-steel pipe hangers for horizontal piping in corrosive environments.
3. Install carbon-steel pipe support clamps for vertical piping in noncorrosive environments.
4. Install stainless-steel pipe support clamps for vertical piping in corrosive environments.
5. Vertical Piping: MSS Type 8 or Type 42, clamps.
6. Individual, Straight, Horizontal Piping Runs:

   a. 100 Feet (30 m) and Less: MSS Type 1, adjustable, steel clevis hangers.
   b. Longer Than 100 Feet (30 m): MSS Type 43, adjustable roller hangers.
   c. Longer Than 100 Feet (30 m) if Indicated: MSS Type 49, spring cushion rolls.

7. Multiple, Straight, Horizontal Piping Runs 100 Feet (30 m) or Longer: MSS Type 44, pipe rolls. Support pipe rolls on trapeze.
8. Base of Vertical Piping: MSS Type 52, spring hangers.

C. Support horizontal piping and tubing within 12 inches (300 mm) of each fitting and coupling.

D. Support vertical piping and tubing at base and at each floor.

E. Rod diameter may be reduced one size for double-rod hangers, with 3/8-inch (10-mm) minimum rods.

F. Install hangers for cast-iron soil piping with the following maximum horizontal spacing and minimum rod diameters:

1. NPS 1-1/2 and NPS 2 (DN 40 and DN 50): 60 inches (1500 mm) with 3/8-inch (10-mm) rod.
2. NPS 3 (DN 80): 60 inches (1500 mm) with 1/2-inch (13-mm) rod.
3. NPS 4 and NPS 5 (DN 100 and DN 125): 60 inches (1500 mm) with 5/8-inch (16-mm) rod.
4. NPS 6 and NPS 8 (DN 150 and DN 200): 60 inches (1500 mm) with 3/4-inch (19-mm) rod.
5. NPS 10 and NPS 12 (DN 250 and DN 300): 60 inches (1500 mm) with 7/8-inch (22-mm) rod.

6. Spacing for 10-foot (3-m) pipe lengths may be increased to 10 feet (3 m). Spacing for fittings is limited to 60 inches (1500 mm).

G. Install supports for vertical cast-iron soil piping every 15 feet (4.5 m).

H. Install hangers for PVC piping with the following maximum horizontal spacing and minimum rod diameters:

1. NPS 1-1/2 and NPS 2 (DN 40 and DN 50): 48 inches (1200 mm) with 3/8-inch (10-mm) rod.
2. NPS 3 (DN 80): 48 inches (1200 mm) with 1/2-inch (13-mm) rod.
3. NPS 4 and NPS 5 (DN 100 and DN 125): 48 inches (1200 mm) with 5/8-inch (16-mm) rod.
4. NPS 6 and NPS 8 (DN 150 and DN 200): 48 inches (1200 mm) with 3/4-inch (19-mm) rod.
5. NPS 10 and NPS 12 (DN 250 and DN 300): 48 inches (1200 mm) with 7/8-inch (22-mm) rod.

I. Install supports for vertical PVC piping every 48 inches (1200 mm).

J. Support piping and tubing not listed above according to MSS SP-69 and manufacturer's written instructions.

3.5 CONNECTIONS

A. Drawings indicate general arrangement of piping, fittings, and specialties.

B. Connect interior storm drainage piping to exterior storm drainage piping. Use transition fitting to join dissimilar piping materials.

C. Connect storm drainage piping to roof drains and storm drainage specialties.

1. Install test tees (wall cleanouts) in conductors near floor, and floor cleanouts with cover flush with floor.
2. Comply with requirements for cleanouts and drains specified in Division 22 Section "Storm Drainage Piping Specialties."

D. Where installing piping adjacent to equipment, allow space for service and maintenance of equipment.

3.6 IDENTIFICATION

A. Identify exposed storm drainage piping. Comply with requirements for identification specified in Division 22 Section "Identification for Plumbing Piping and Equipment."

3.7 FIELD QUALITY CONTROL

A. During installation, notify authorities having jurisdiction at least 24 hours before inspection must be made. Perform tests specified below in presence of authorities having jurisdiction.

1. Roughing-in Inspection: Arrange for inspection of piping before concealing or closing-in after roughing-in.
2. Final Inspection: Arrange for final inspection by authorities having jurisdiction to observe tests specified below and to ensure compliance with requirements.

B. Reinspection: If authorities having jurisdiction find that piping will not pass test or inspection, make required corrections and arrange for reinspection.

C. Reports: Prepare inspection reports and have them signed by authorities having jurisdiction.

D. Test storm drainage piping according to procedures of authorities having jurisdiction or, in absence of published procedures, as follows:

1. Test for leaks and defects in new piping and parts of existing piping that have been altered, extended, or repaired. If testing is performed in segments, submit separate report for each test, complete with diagram of portion of piping tested.
2. Leave uncovered and unconcealed new, altered, extended, or replaced storm drainage piping until it has been tested and approved. Expose work that was covered or concealed before it was tested.
3. Test Procedure: Test storm drainage piping**,** except outside leaders**,** on completion of roughing-in. Close openings in piping system and fill with water to point of overflow, but not less than 10-foot head of water (30 kPa). From 15 minutes before inspection starts until completion of inspection, water level must not drop. Inspect joints for leaks.
4. Repair leaks and defects with new materials and retest piping, or portion thereof, until satisfactory results are obtained.
5. Prepare reports for tests and required corrective action.

3.8 CLEANING

A. Clean interior of piping. Remove dirt and debris as work progresses.

B. Protect drains during remainder of construction period to avoid clogging with dirt and debris and to prevent damage from traffic and construction work.

C. Place plugs in ends of uncompleted piping at end of day and when work stops.

3.9 PIPING SCHEDULE

A. Flanges and unions may be used on aboveground pressure piping unless otherwise indicated.

B. Where plastic piping is listed as an accepted pipe material in the schedules, it shall be permitted except where prohibited by code or authority having jurisdiction, including but not necessarily limited to air plenums.

C. Aboveground storm drainage piping NPS 10 (DN 250) and smaller shall be any of the following:

1. Service class, cast-iron soil pipe and fittings; gaskets; and gasketed joints.
2. Hubless, cast-iron soil pipe and fittings; CISPI, hubless-piping couplings; and coupled joints.
3. Solid-wall PVC pipe, PVC socket fittings, and solvent-cemented joints.

D. Underground storm drainage piping NPS 10 (DN 250) and smaller shall be any of the following:

1. Service class, cast-iron soil pipe and fittings; gaskets; and gasketed
2. Hubless, cast-iron soil pipe and fittings; CISPI, hubless-piping couplings; and coupled joints.
3. Solid-wall PVC pipe, PVC socket fittings, and solvent-cemented joints.

END OF SECTION 221413

SECTION 221423 - STORM DRAINAGE PIPING SPECIALTIES

PART 1 - GENERAL

1.1 RELATED DOCUMENTS

A. Drawings and general provisions of the Contract, including General and Supplementary Conditions and Division 01 Specification Sections, apply to this Section.

1.2 SUMMARY

A. Section Includes:

1. Roof drains.
2. Miscellaneous storm drainage piping specialties.
3. Cleanouts.
4. Through-penetration firestop assemblies.
5. Flashing materials.

1.3 SUBMITTALS

A. Product Data: For each type of product indicated.

1.4 QUALITY ASSURANCE

A. Drainage piping specialties shall bear label, stamp, or other markings of specified testing agency.

PART 2 - PRODUCTS

2.1 METAL ROOF DRAINS

A. General-Purpose Roof Drains (RD1):

1. Manufacturers: Subject to compliance with requirements, provide products by one (1) of the following:

   a. Josam Company.
   b. Smith, Jay R. Mfg. Co.
   c. Tyler Pipe/Wade Division
   d. Zurn Plumbing Products Group; Specification Drainage Operation

2. Basis-of-Design Product: Refer to schedules on the drawings for Basis-of-Design product and roof drain requirements.

B. Cast-Iron, Bi-Functional Roof Drains (RD2):

1. Manufacturers: Subject to compliance with requirements, provide products by one (1) of the following:

a. Froet Industries LLC
b. Smith, Jay R. Mfg. Co.
c. Tyler Pipe/Wade Division
d. Zurn Plumbing Products Group; Specification Drainage Operation

2. Basis-of-Design Product: Refer to schedules on the drawings for Basis-of-Design product and bi-functional roof drain requirements.

2.2 MISCELLANEOUS STORM DRAINAGE PIPING SPECIALTIES

A. Conductor Nozzles (Secondary/Emergency (OST) Storm Drain System Discharge outlet):

1. Description: Bronze body with threaded inlet and bronze wall flange with mounting holes; with birdscreen.
2. Size: Same as connected conductor.
3. Manufacturers: Subject to compliance with requirements, provide products by one (1) of the following:

a. MIFAB, Inc.
b. Smith, Jay R. Mfg. Co.
c. Tyler Pipe/Wade Division
d. Zurn Plumbing Products Group; Specification Drainage Operation

4. Basis of Design: Wade **Model 3940 Series**

B. Expansion Joints:

1. Standard: ASME A112.21.2M.
2. Body: Cast iron with bronze sleeve, packing, and gland.
3. End Connections: Matching connected piping.
4. Size: Same as connected soil, waste, or vent piping.

C. Seismic Expansion Joints:

1. Manufacturers: Subject to compliance with requirements, provide products by one (1) of the following:

a. EBAA Iron Sales, Inc.

2. Type: Double Ball.
3. Basis of Design: EBAA Iron Sales, Inc., **FLEX-TEND**
4. Installation: In strict accordance with manufacturer's requirements, including restraint of piping on both sides of the joint, isolation of axial expansion forces, installation of hangers and supports, etc.
5. End Connections: Matching connected piping.
6. Size: Same as connected soil, waste, or vent piping.

2.3 CLEANOUTS

A. Floor Cleanouts (FCO):

1. Manufacturers: Subject to compliance with requirements, provide products by one (1) of the following:

    a. Josam Company
    b. Smith, Jay R. Mfg. Co.
    c. Tyler Pipe. Wade Division
    d. Zurn Plumbing Products Group; Specification Drainage Operation

2. Standard: ASME A112.36.2M, for threaded, adjustable housing cleanouts.
3. Size: Same as connected branch.
4. Type: Threaded, adjustable housing.
5. Body or Ferrule Material: Cast iron.
6. Clamping Device: Not required.
7. Outlet Connection: Inside calk.
8. Closure: Brass plug with tapered threads.
9. Adjustable Housing Material: Cast iron with threads.
10. Frame and Cover Material and Finish: Polished bronze, copper alloy.
11. Frame and Cover Shape: Round.
12. Top-Loading Classification: Medium Duty
13. Riser: ASTM A 74, Service class, cast-iron drainage pipe fitting and riser to cleanout.

B. Test Tees:

1. Manufacturers: Subject to compliance with requirements, provide products by one (1) of the following:

    a. Josam Company
    b. MIFAB, Inc.
    c. Smith, Jay R. Mfg. Co.
    d. Tyler Pipe
    e. Zurn Plumbing Products Group; Specification Drainage Operation

2. Standard: ASME A112.36.2M and ASTM A 74, ASTM A 888, or CISPI 301, for cleanout test tees.
3. Size: Same as connected drainage piping.
4. Body Material: Hub-and-spigot, cast-iron soil-pipe T-branch or hubless, cast-iron soil-pipe test tee as required to match connected piping.
5. Closure Plug: Countersunk brass.
6. Closure Plug Size: Same as or not more than one size smaller than cleanout size.

C. Wall Cleanouts (WCO):

1. Manufacturers: Subject to compliance with requirements, provide products by one (1) of the following:

    a. Josam Company
    b. MIFAB, Inc.
    c. Smith, Jay R. Mfg. Co.
    d. Tyler Pipe
    e. Zurn Plumbing Products Group; Specification Drainage Operation

2. Standard: ASME A112.36.2M, for cleanouts. Include wall access.
3. Size: Same as connected drainage piping.
4. Body Material: Hubless, cast-iron soil-pipe test tee as required to match connected piping.
5. Closure: Countersunk brass plug.
6. Closure Plug Size: Same as or not more than one (1) size smaller than cleanout size.
7. Wall Access: Square stainless-steel wall-installation frame and cover.

2.4 THROUGH-PENETRATION FIRESTOP ASSEMBLIES

A. Through-Penetration Firestop Assemblies:

1. Manufacturers: Subject to compliance with requirements, provide products by one (1) of the following:

   a. ProSet Systems Inc.

2. Standard: ASTM E 814, for through-penetration firestop assemblies.
3. Certification and Listing: from testing agency acceptable to authorities having jurisdiction for through-penetration firestop assemblies.
4. Size: Same as connected pipe.
5. Sleeve: Molded PVC plastic, of length to match slab thickness and with integral nailing flange on one end for installation in cast-in-place concrete slabs.
6. Stack Fitting: ASTM A 48, gray-iron, hubless-pattern, wye branch with neoprene O-ring at base and gray-iron plug in thermal-release harness. Include PVC protective cap for plug.
7. Special Coating: Corrosion resistant on interior of fittings.

2.5 FLASHING MATERIALS

A. Copper Sheet: ASTM B 152, 12 oz./sq. ft.

B. Zinc-Coated Steel Sheet: ASTM A 653, with 0.20 percent copper content and 0.04-inch minimum thickness unless otherwise indicated. Include G90 hot-dip galvanized, mill-phosphatized finish for painting if indicated.

C. Elastic Membrane Sheet: ASTM D 4068, flexible, chlorinated polyethylene, 40-mil minimum thickness.

D. Fasteners: Metal compatible with material and substrate being fastened.

E. Metal Accessories: Sheet metal strips, clamps, anchoring devices, and similar accessory units required for installation; matching or compatible with material being installed.

F. Solder: ASTM B 32, lead-free alloy.

PART 3 - EXECUTION

3.1 INSTALLATION

A. Install roof drains at low points of roof areas according to roof membrane manufacturer's written installation instructions. Roofing materials are specified in Division 07 Sections.

1. Install flashing collar or flange of roof drain to prevent leakage between drain and adjoining roofing. Maintain integrity of waterproof membranes where penetrated.
2. Position roof drains for easy access and maintenance.

B. Install conductor (emergency storm drain system) nozzles where conductors spill onto grade.

C. Install cleanouts in aboveground piping and building drain piping according to the following instructions unless otherwise indicated:

1. Use cleanouts the same size as drainage piping up to NPS 4. Use NPS 4 for larger drainage piping unless larger cleanout is indicated.
2. Locate cleanouts at each change in direction of piping greater than 45 degrees.
3. Locate cleanouts at minimum intervals of 50 feet for piping NPS 4 and smaller and 100 feet for larger piping.
4. Locate cleanouts at base of each vertical soil and waste stack.

D. For floor cleanouts for piping below floors, install cleanout deck plates with top flush with finished floor.

E. For cleanouts located in concealed piping, install cleanout wall access covers, of types indicated, with frame and cover flush with finished wall.

F. Install test tees in vertical conductors and near floor.

G. Install wall cleanouts in vertical conductors. Install access door in wall if indicated.

H. Install through-penetration firestop assemblies in plastic conductors at concrete floor penetrations.

I. Install sleeve flashing device with each conductor passing through floors with waterproof membrane.

J. Install expansion joint where piping passes across building expansion joint.

K. Install seismic expansion joint where piping passes across building seismic expansion joint.

3.2 CONNECTIONS

A. Comply with requirements for piping specified in Division 22 Sections. Drawings indicate general arrangement of piping, fittings, and specialties.

3.3 FLASHING INSTALLATION

A. Fabricate flashing from single piece of metal unless large pans, sumps, or other drainage shapes are required. Join flashing according to the following if required:

1. Lead Sheets: Burn joints of 6.0-lb/sq. ft. lead sheets, 0.0938-inch thickness or thicker. Solder joints of 4.0-lb/sq. ft. lead sheets, 0.0625-inch thickness or thinner.
2. Copper Sheets: Solder joints of copper sheets.

B. Install sheet flashing on pipes, sleeves, and specialties passing through or embedded in floors and roofs with waterproof membrane.

1. Pipe Flashing: Sleeve type, matching the pipe size, with a minimum length of 10 inches and with skirt or flange extending at least 8 inches around pipe.
2. Sleeve Flashing: Flat sheet, with skirt or flange extending at least 8 inches around sleeve.
3. Embedded Specialty Flashing: Flat sheet, with skirt or flange extending at least 8 inches around specialty.

C. Set flashing on floors and roofs in solid coating of bituminous cement.

D. Secure flashing into sleeve and specialty clamping ring or device.

E. Fabricate and install flashing and pans, sumps, and other drainage shapes.

3.4 PROTECTION

A. Protect drains during remainder of construction period to avoid clogging with dirt or debris and to prevent damage from traffic or construction work.

B. Place plugs in ends of uncompleted piping at end of each day or when work stops.

END OF SECTION 221423

SECTION 223400 - FUEL-FIRED, DOMESTIC-WATER HEATERS

PART 1 - GENERAL

1.1 RELATED DOCUMENTS

A. Drawings and general provisions of the Contract, including General and Supplementary Conditions and Division 01 Specification Sections, apply to this Section.

1.2 SUMMARY

A. Section Includes:

1. Commercial, gas-fired, high-efficiency, power vent, storage, domestic-water heaters.
2. Instantaneous, tankless gas-fired domestic-water heater
3. Domestic water heater accessories.

1.3 PERFORMANCE REQUIREMENTS

A. Seismic Performance: Commercial domestic-water heaters shall withstand the effects of earthquake motions determined according to State of Connecticut Building Code.

1. The term "withstand" means "the unit will remain in place without separation of any parts from the device when subjected to the seismic forces specified.

1.4 SUBMITTALS

A. Product Data: For each type and size of domestic-water heater indicated. Include rated capacities, operating characteristics, electrical characteristics, and furnished specialties and accessories.

B. Shop Drawings:

1. Wiring Diagrams: For power, signal, and control wiring.

C. Seismic Qualification Certificates: For fuel-fired, domestic-water heaters, accessories, and components, from manufacturer.

1. Basis for Certification: Indicate whether withstand certification is based on actual test of assembled components or on calculation.
2. Dimensioned Outline Drawings of Equipment Unit: Identify center of gravity and locate and describe mounting and anchorage provisions.
3. Detailed description of equipment anchorage devices on which the certification is based and their installation requirements.

D. Product Certificates: For each type of commercial, gas-fired, domestic-water heater, from manufacturer.

E. Domestic-Water Heater Labeling: Certified and labeled by testing agency acceptable to authorities having jurisdiction.

F. Source quality-control reports.

G. Field quality-control reports.

H. Operation and Maintenance Data: For fuel-fired, domestic-water heaters to include in emergency, operation, and maintenance manuals.

I. Warranty: Sample of special warranty.

1.5 QUALITY ASSURANCE

A. Electrical Components, Devices, and Accessories: Listed and labeled as defined in NFPA 70, by a qualified testing agency, and marked for intended location and application.

B. ASHRAE/IESNA 90.1 Compliance: Fabricate and label fuel-fired, domestic-water heaters to comply with ASHRAE/IESNA 90.1.

C. NSF Compliance: Fabricate and label equipment components that will be in contact with potable water to comply with NSF 61, "Drinking Water System Components - Health Effects."

1.6 COORDINATION

A. Coordinate sizes and locations of concrete bases with actual equipment provided.

1.7 WARRANTY

A. Special Warranty: Manufacturer's standard form in which manufacturer agrees to repair or replace components of fuel-fired, domestic-water heaters that fail in materials or workmanship within specified warranty period.

1. Failures include, but are not limited to, the following:

a. Structural failures including storage tank and supports.
b. Faulty operation of controls.
c. Deterioration of metals, metal finishes, and other materials beyond normal use.

2. Warranty Periods: From date of Substantial Completion.

a. Commercial, Gas-Fired Domestic-Water Heaters (GWH1 and GWH2):

1) Storage Tank/Construction: Three (3) years.
2) Controls and Other Components: One (1) year.

b. Compression (Expansion) Tanks (ET1): Five (5) years.

PART 2 - PRODUCTS

2.1 COMMERCIAL, GAS-FIRED, STORAGE, DOMESTIC-WATER HEATER (GWH1)

A. Commercial, Gas-Fired, High-Efficiency, Storage, Domestic-Water Heaters:

1. Manufacturers: Subject to compliance with requirements, provide products by one of the following:
   a. American Water Heaters.
   b. Bradford White Corporation.
   c. Lochinvar Corporation.
   d. Rheem Manufacturing Company.
   e. Smith, A. O. Water Products Co.; a division of A. O. Smith Corporation.

2. Basis-of-Design Product: Refer to Schedule on drawings for Basis-of-Design product.

3. Standard: ANSI Z21.10.3/CSA 4.3.
4. Description: Manufacturer's proprietary design to provide at least 95 percent combustion efficiency at optimum operating conditions.
5. Storage-Tank Construction: ASME-code steel with 150-psig (1035-kPa) minimum working-pressure rating.

   a. Tappings: Factory fabricated of materials compatible with tank. Attach tappings to tank before testing.

      1) NPS 2 (DN 50) and Smaller: Threaded ends according to ASME B1.20.1.

   b. Interior Finish: Comply with NSF 61 barrier materials for potable-water tank linings, including extending finish into and through tank fittings and outlets.
   c. Lining: Glass, complying with NSF 61 barrier materials for potable-water tank linings, including extending lining into and through tank fittings and outlets.

6. Factory-Installed Storage-Tank Appurtenances:

   a. Anode Rod: Replaceable magnesium.
   b. Dip Tube: Required unless cold-water inlet is near bottom of tank.
   c. Drain Valve: Corrosion-resistant metal complying with ASSE 1005.
   d. Insulation: Comply with ASHRAE/IESNA 90.1. Surround entire storage tank except connections and controls.
   e. Jacket: Steel with enameled finish.
   f. Burner or Heat Exchanger: Comply with UL 795 or approved testing agency requirements for gas-fired, high-efficiency, domestic-water heaters and natural-gas fuel.
   g. Temperature Control: Adjustable thermostat.
   h. Safety Controls: Automatic, high-temperature-limit and low-water cutoff devices or systems.
   i. Combination Temperature-and-Pressure Relief Valves: ANSI Z21.22/CSA 4.4-M. Include one or more relief valves with total relieving capacity at least as great as heat input, and include pressure setting less than domestic-water heater working-

pressure rating. Select one relief valve with sensing element that extends into storage tank.

7. Venting: sealed combustion direct venting using CPVC pipe for exhaust and PVC pipe for intake, terminating through roof using single opening and concentric vent assembly.

B. Capacity and Characteristics:

1. Capacity: 100 gallons.
2. Recovery: 230 gph at 100 deg F temperature rise.
3. Temperature Setting: 140 deg F.
4. Fuel Gas Input: 199,000 Btu/h.
5. Gas Pressure Regulator required:

   a. Capacity: 200 MBH minimum.
   b. Inlet Pressure maximum rating: 5 psig to 10 psig.
   c. Minimum/maximum gas supply pressure to heater : 11” w.c.-14” w.c. (Propane).

6. Electrical Characteristics:

   a. Volts: 120.
   b. Phase: Single.
   c. Hertz: 60.
   d. Full-Load Amperes: Blower: 2.2; Igniter: 4.0
   e. Minimum Circuit Ampacity: 6.2
   f. Maximum Overcurrent Protection: 20 amp.

7. Minimum Vent Diameter: Size per manufacturer’s requirements for specific water heater model, and total equivalent length of Intake and Exhaust piping, including fitting loss allowances.

2.2 GAS-FIRED, TANKLESS, DOMESTIC-WATER HEATERS

A. Basis-of-Design Product: Subject to compliance with requirements, provide product indicated on Drawings or comparable product by one of the following:
1. Bosch Water Heating.
2. Bradford White Corporation.
3. Paloma Industries, Inc.
4. Rheem Manufacturing Company; Rheem Water Heating.
5. Rinnai Corporation.
6. Smith, A. O. Water Products Co.; a division of A. O. Smith Corporation.
7. State Industries.
8. Takagi.

B. Standard: ANSI Z21.10.3/CSA 4.3 for gas-fired, instantaneous, domestic-water heaters for indoor application.

C. Construction: Copper piping or tubing complying with NSF 61 barrier materials for potable water, without storage capacity.

1. Tappings: ASME B1.20.1 pipe thread.
2. Pressure Rating: 150 psig (1035 kPa).
3. Heat Exchanger: Copper tubing.
4. Insulation: Comply with ASHRAE/IESNA 90.1.
5. Energy Factor (Efficiency): 82 percent or greater.
6. Jacket: Metal, with enameled finish, or plastic.
7. Burner: For use with tankless, domestic-water heaters and natural-gas fuel.
8. Automatic Ignition: Manufacturer's proprietary system for automatic, gas ignition.
9. Temperature Control: Adjustable thermostat.
10. Controller: Remote hand-held type, capable of adjusting thermostatic setting from 100 degF to 160 degF.

D. Support: Bracket for wall mounting.

E. Capacity and Characteristics:

1. Flow Rate: 5 gpm at 50 deg F temperature rise.
2. Temperature Setting: 140 deg F (60 deg C)
3. Fuel Gas Input: 10.3 MBH to 150 MBH.
4. Gas Pressure Regulator: None required (supply pressure of 10 inches water column is within required inlet pressure range of 5 to 10.5 inches water column.

5. Electrical Characteristics:

a. Volts: 120
b. Phase: Single.
c. Hertz: 60.
d. Electrical Consumption, Normal, Operating: 76 watts.
e. Maximum Overcurrent Protection: 20 amps.

6. Venting: Vertical through roof.

2.3 DOMESTIC-WATER HEATER ACCESSORIES

A. Domestic-Water Compression (Expansion) Tank (ET1):

1. Manufacturers: Subject to compliance with requirements, provide products by one (1) of the following:

a. AMTROL Inc.
b. Flexcon Industries
c. Honeywell International Inc.
d. Smith, A. O. Water Products Co.; a division of A. O. Smith Corporation
e. Taco, Inc.

2. Basis-of-Design Product: Refer to Schedule on drawings for Basis-of-Design product.
3. Description: ASME-rated and stamped, steel, pressure-rated tank constructed with welded joints and factory-installed butyl-rubber diaphragm. Include air precharge to minimum system-operating pressure at tank.
4. Construction:

a. Tappings: Factory-fabricated steel, welded to tank before testing and labeling. Include ASME B1.20.1 pipe thread.
b. Interior Finish: Comply with NSF 61 barrier materials for potable-water tank linings, including extending finish into and through tank fittings and outlets.
c. Air-Charging Valve: Factory installed.

5. Capacity and Characteristics:

a. Working-Pressure Rating 150 psig.
b. Capacity: 6.4 gallons total volume, 0.41 maximum acceptance factor
c. Air Precharge Pressure: 55 psig.

B. Piping-Type Heat Traps: Field-fabricated piping arrangement according to ASHRAE/IESNA 90.1.

C. Heat-Trap Fittings: ASHRAE 90.2.

D. Gas Shutoff Valves: ANSI Z21.15/CSA 9.1-M, manually operated. Furnish for installation in piping.

E. Automatic Shutdown: when blockage of vent or intake occurs.

F. Combination Temperature-and-Pressure Relief Valves: Shall be Factory-furnished and installed.

G. Vacuum Relief Valves: ANSI Z21.22/CSA 4.4-M.

2.4 SOURCE QUALITY CONTROL

A. Factory Tests: Test and inspect assembled domestic-water heaters specified to be ASME-code construction, according to ASME Boiler and Pressure Vessel Code.

B. Hydrostatically test commercial domestic-water heaters to minimum of one and one-half times pressure rating before shipment.

C. Domestic-water heaters will be considered defective if they do not pass tests and inspections. Comply with requirements in Section 014000 "Quality Requirements" for retesting and reinspecting requirements and Section 017300 "Execution" for requirements for correcting the Work.

D. Prepare test and inspection reports.

PART 3 - EXECUTION

3.1 DOMESTIC-WATER HEATER INSTALLATION

A. Commercial, Domestic-Water Heater Mounting: Install commercial domestic-water heaters on concrete base. Comply with requirements for concrete base specified in Section 032000 "Concrete Work."

1. Exception: Omit concrete bases for commercial domestic-water heaters if installation on wall with bracket is indicated.
2. Maintain manufacturer's recommended clearances.
3. Arrange units so controls and devices that require servicing are accessible.
4. Install dowel rods to connect concrete base to concrete floor. Unless otherwise indicated, install dowel rods on 18-inch centers around the full perimeter of concrete base.
5. For supported equipment, install epoxy-coated anchor bolts that extend through concrete base and anchor into structural concrete floor.
6. Place and secure anchorage devices. Use setting drawings, templates, diagrams, instructions, and directions furnished with items to be embedded.
7. Install anchor bolts to elevations required for proper attachment to supported equipment.
8. Anchor domestic-water heaters to substrate.

B. Install domestic-water heaters level and plumb, according to layout drawings, original design, and referenced standards. Maintain manufacturer's recommended clearances. Arrange units so controls and devices needing service are accessible.

1. Install shutoff valves on domestic-water-supply piping to domestic-water heaters and on domestic-hot-water outlet piping. Comply with requirements for shutoff valves specified in Section 220523 "General-Duty Valves for Plumbing Piping."

C. Install gas-fired, domestic-water heaters according to NFPA 54.

1. Install gas shutoff valves on gas supply piping to gas-fired, domestic-water heaters without shutoff valves.
2. Install gas pressure regulators on gas supplies to gas-fired, domestic-water heaters without gas pressure regulators if gas pressure regulators are required to reduce gas pressure at burner.
3. Install automatic gas valves on gas supplies to gas-fired, domestic-water heaters if required for operation of safety control.
4. Comply with requirements for gas shutoff valves, gas pressure regulators, and automatic gas valves specified in Section 231123 "Facility Natural-Gas Piping."

D. Install commercial domestic-water heaters with seismic-restraint devices. Comply with requirements for seismic-restraint devices specified in Section 220548 "Vibration and Seismic Controls for Plumbing Piping and Equipment."

E. Extend commercial-water-heater relief-valve outlet, with drain piping same as domestic-water piping in continuous downward pitch, and discharge by positive air gap onto closest floor drain.

F. Install water-heater drain piping as indirect waste to spill by positive air gap into open drains or over floor drains. Install hose-end drain valves at low points in water piping for domestic-water heaters that do not have tank drains. Comply with requirements for hose-end drain valves specified in Section 221119 "Domestic Water Piping Specialties."

G. Install thermometer on outlet piping of domestic-water heaters. Comply with requirements for thermometers specified in Section 220519 "Meters and Gages for Plumbing Piping."

H. Install piping-type heat traps on inlet and outlet piping of domestic-water heater storage tanks without integral or fitting-type heat traps.

I. Fill domestic-water heaters with water.

J. Charge domestic-water compression tanks with air.

3.2 CONNECTIONS

A. Comply with requirements for domestic-water piping specified in Section 221116 "Domestic Water Piping."

B. Comply with requirements for gas piping specified in Section 231123 "Facility Natural-Gas Piping."

C. Drawings indicate general arrangement of piping, fittings, and specialties.

D. Where installing piping adjacent to fuel-fired, domestic-water heaters, allow space for service and maintenance of water heaters. Arrange piping for easy removal of domestic-water heaters.

3.3 IDENTIFICATION

A. Identify system components. Comply with requirements for identification specified in Section 220553 "Identification for Plumbing Piping and Equipment."

3.4 FIELD QUALITY CONTROL

A. Perform tests and inspections.

1. Manufacturer's Field Service: Engage a factory-authorized service representative to inspect components, assemblies, and equipment installations, including connections, and to assist in testing.
2. Leak Test: After installation, charge system and test for leaks. Repair leaks and retest until no leaks exist.
3. Operational Test: After electrical circuitry has been energized, start units to confirm proper operation.
4. Test and adjust controls and safeties. Replace damaged and malfunctioning controls and equipment.

B. Domestic-water heaters will be considered defective if they do not pass tests and inspections. Comply with requirements in Section 014000 "Quality Requirements" for retesting and reinspecting requirements and Section 017300 "Execution" for requirements for correcting the Work.

C. Prepare test and inspection reports.

3.5 DEMONSTRATION

A. Train Owner's maintenance personnel to adjust, operate, and maintain commercial, gas-fired, domestic-water heaters.

END OF SECTION 223400

SECTION 224000 - PLUMBING FIXTURES

PART 1 - GENERAL

1.1 RELATED DOCUMENTS

A. Drawings and general provisions of the Contract, including General and Supplementary Conditions and Division 01 Specification Sections, apply to this Section.

1.2 SUMMARY

A. This Section includes the following conventional plumbing fixtures and related components:

1. Faucets for lavatories and sinks.
2. Flushometers.
3. Toilet seats.
4. Protective shielding guards.
5. Fixture supports.
6. Water closets.
7. Urinals.
8. Lavatories.
9. Counter-mount sinks.
10. Counter-mount sink/fountain fixtures.
11. Roll-in accessible showers.
12. Mop service basins.
13. Owner-furnished fixtures.

B. Related Sections include the following:

1. Section 102800 "Toilet, Bath, and Laundry Accessories."
2. Section 221119 "Domestic Water Piping Specialties" for backflow preventers, floor drains, and specialty fixtures not included in this Section.
3. Section 224700 "Drinking Fountains and Water Coolers."

1.3 DEFINITIONS

A. ABS: Acrylonitrile-butadiene-styrene plastic.

B. Accessible Fixture: Plumbing fixture that can be approached, entered, and used by people with disabilities.

C. Cast Polymer: Cast-filled-polymer-plastic material. This material includes cultured-marble and solid-surface materials.

D. Cultured Marble: Cast-filled-polymer-plastic material with surface coating.

E. Fitting: Device that controls the flow of water into or out of the plumbing fixture. Fittings specified in this Section include supplies and stops, faucets and spouts, shower heads and tub spouts, drains and tailpieces, and traps and waste pipes. Piping and general-duty valves are included where indicated.

F. FRP: Fiberglass-reinforced plastic.

G. PMMA: Polymethyl methacrylate (acrylic) plastic.

H. PVC: Polyvinyl chloride plastic.

I. Solid Surface: Nonporous, homogeneous, cast-polymer-plastic material with heat-, impact-, scratch-, and stain-resistance qualities.

1.4 SUBMITTALS

A. Product Data: For each type of plumbing fixture indicated. Include selected fixture and trim, fittings, accessories, appliances, appurtenances, equipment, and supports. Indicate materials and finishes, dimensions, construction details, and flow-control rates.

B. HPBS Submittals:

1. Product Data for Sections 16a-38k-3(f) and 16a-38k-6(c)(1): Documentation indicating flow and water consumption requirements.

C. Shop Drawings: Diagram power, signal, and control wiring.

D. Operation and Maintenance Data: For plumbing fixtures to include in emergency, operation, and maintenance manuals.

E. Warranty: Special warranty specified in this Section.

1.5 QUALITY ASSURANCE

A. Source Limitations: Obtain plumbing fixtures, faucets, and other components of each category through one source from a single manufacturer.

1. Exception: If fixtures, faucets, or other components are not available from a single manufacturer, obtain similar products from other manufacturers specified for that category.

B. Electrical Components, Devices, and Accessories: Listed and labeled as defined in NFPA 70, Article 100, by a testing agency acceptable to authorities having jurisdiction, and marked for intended use.

C. Regulatory Requirements: Comply with requirements in ICC A117.1, "Accessible and Usable Buildings and Facilities"; Public Law 90-480, "Architectural Barriers Act"; and Public Law 101-336, "Americans with Disabilities Act"; for plumbing fixtures for people with disabilities.

D. Regulatory Requirements: At minimum, comply with requirements in Public Law 102-486, "Energy Policy Act," about water flow and consumption rates for plumbing fixtures. Where indicated in Fixture Schedule on the plans, provide additional reduction in water consumption rates for plumbing fixtures.

E. NSF Standard: Comply with NSF 61, "Drinking Water System Components--Health Effects," and NSF 372 Lead-Free ANSI 3rd Party Certified, for fixture materials that will be in contact with potable water.

F. Select combinations of fixtures and trim, faucets, fittings, and other components that are compatible.

G. Comply with the following applicable standards and other requirements specified for plumbing fixtures:

1. Enameled, Cast-Iron Fixtures: ASME A112.19.1M.
2. Stainless-Steel Commercial, Sinks and Handwash Sinks: NSF 2 construction.
3. Stainless-Steel Residential Sinks: ASME A112.19.3.
4. Vitreous-China Fixtures: ASME A112.19.2M.
5. Water-Closet, Flushometer Trim: applicable sections of ASSE 1037.ASME 112.19.6.

H. Comply with the following applicable standards and other requirements specified for lavatory and sink faucets:

1. Faucets: ASME A112.18.1.
2. Hose-Connection Vacuum Breakers: ASSE 1011.
3. Hose-Coupling Threads: ASME B1.20.7.
4. Integral, Atmospheric Vacuum Breakers: ASSE 1001.
5. NSF Potable-Water Materials: NSF 61 and NSF 372 Lead-Free ANSI 3rd Party Certified.
6. Pipe Threads: ASME B1.20.1.
7. Sensor-Actuated Faucets and Electrical Devices: UL 1951.
8. Supply Fittings: ASME A112.18.1.
9. Brass Waste Fittings: ASME A112.18.2.
10. Bubblers: NSF 61 and NSF 372 Lead-Free ANSI 3rd Party Certified

I. Comply with the following applicable standards and other requirements specified for miscellaneous fittings:

1. Atmospheric Vacuum Breakers: ASSE 1001.
2. Brass and Copper Supplies: ASME A112.18.1.
3. Dishwasher Air-Gap Fittings: ASSE 1021.
4. Manual-Operation Flushometers: ASSE 1037.
5. Plastic Tubular Fittings: ASTM F 409.
6. Brass Waste Fittings: ASME A112.18.2.
7. Sensor-Operation Flushometers: ASSE 1037 and UL 1951.

J. Comply with the following applicable standards and other requirements specified for miscellaneous components:

1. Flexible Water Connectors: ASME A112.18.6.
2. Floor Drains: ASME A112.6.3.
3. Hose-Coupling Threads: ASME B1.20.7.
4. Off-Floor Fixture Supports: ASME A112.6.1M.
5. Pipe Threads: ASME B1.20.1.
6. Plastic Toilet Seats: ANSI Z124.5.
7. Supply and Drain Protective Shielding Guards: ICC A117.1., ASTM E 84

1.6 EXTRA MATERIALS

A. Furnish extra materials described below that match products installed and that are packaged with protective covering for storage and identified with labels describing contents.

1. Faucet Washers and O-Rings: Equal to ten percent (10%) of amount of each type and size installed.
2. Faucet Cartridges and O-Rings: Equal to five percent (5%) of amount of each type and size installed.
3. Flushometer Valve, Repair Kits: Equal to ten percent (10%) of amount of each type installed, but no fewer than two (2) of each type.
4. Provide hinged-top wood or metal box, or individual metal boxes, with separate compartments for each type and size of extra materials listed above.
5. Toilet Seats: Equal to ten percent (10%) of amount of each type installed.

PART 2 - PRODUCTS

2.1 LAVATORY FAUCETS

A. Lavatory Faucets:

1. Basis-of-Design Product: Provide basis-of design product specified with particular lavatory fixture in Plumbing Fixture schedule on drawings. Substitutions of products by manufacturers other than approved manufacturers listed following will be subject to, and contingent upon, Owner's approval.
2. Approved Manufacturers: Sloan Valve Company, Hydrotek, Moen Commercial

2.2 SINK FAUCETS

A. Sink Faucets:

1. Basis-of-Design Product: Provide basis-of design product specified with particular sink fixture in Plumbing Fixture schedule on drawings. Substitutions of products by manufacturers other than approved manufacturers listed following will be subject to, and contingent upon, Owner's approval.
2. Approved Manufacturers: Moen Commercial, Hydrotek, Delta Faucet Company, Elkay Manufacturing Co.

2.3 FLUSHOMETERS

A. Flushometers:

1. Basis-of-Design Product: Provide basis-of design product specified with particular water closet or urinal fixture in Plumbing Fixture schedule on drawings. Substitutions of products by manufacturers other than approved manufacturers listed following will be subject to, and contingent upon, Owner's approval.
2. Approved Manufacturers: Sloan Valve Company.

2.4 TOILET SEATS

A. Toilet Seats:

1. Basis-of-Design Product: Provide basis-of design product specified with particular water closet fixture in Plumbing Fixture schedule on drawings.
2. Approved Manufacturers: Olsonite Co., Bemis, Church Seats

2.5 PROTECTIVE SHIELDING GUARDS

A. Protective Shielding Pipe Covers:

1. Basis-of-Design Product: Provide basis-of design product specified with particular lavatory or sink fixture in Plumbing Fixture schedule on drawings. Substitutions will be subject to, and contingent upon, Owner's approval. Product must be ASTM E 84 compliant.

B. Protective Shielding Piping Enclosures:

1. Basis-of-Design Product: Provide basis-of design product specified with particular lavatory or sink fixture in Plumbing Fixture schedule on drawings.

2.6 FIXTURE SUPPORTS

A. Manufacturers: Subject to compliance with requirements, provide products by one (1) of the following:

1. Josam Company
2. MIFAB Manufacturing Inc.
3. Smith, Jay R. Mfg. Co.
4. Tyler Pipe; Wade Div.
5. Zurn Plumbing Products Group; Specification Drainage Operation

B. Water-Closet Supports (for wall-mounted fixtures, if used):

1. Description: Combination carrier designed for accessible or standard mounting height (as required for each fixture installation) of wall-mounting, water-closet-type fixture. Include single or double, vertical or horizontal, hub-and-spigot or hubless waste fitting as required for piping arrangement; faceplates; couplings with gaskets; feet; and fixture bolts and hardware matching fixture. Include additional extension coupling, faceplate, and feet for installation in wide pipe space.

C. Urinal Supports:

1. Description: Type II, urinal carrier with hanger and bearing plates for wall-mounting, urinal-type fixture. Include steel uprights with feet.
2. Accessible-Fixture Support: Include rectangular steel uprights.

D. Lavatory Supports:

1. Description: Type II, lavatory carrier with concealed arms and tie rod for wall-mounting, lavatory-type fixture. Include steel uprights with feet.

2. Accessible-Fixture Support: Include rectangular steel uprights.

2.7 WATER CLOSETS-ADULT AND CHILD HEIGHTS (WC1, WC1H, WC2, WC2H)

A. Water Closets, Adult and Child Heights:

1. Basis-of-Design Products: Provide basis-of design products specified in Plumbing Fixture schedule on drawings.
2. Approved Manufacturers: American Standard Companies, Inc., Kohler Co.

2.8 URINALS (UR1, UR1H)

A. Urinals:

1. Basis-of-Design Products: Provide basis-of design products specified in Plumbing Fixture schedule on drawings.
2. Approved Manufacturers: American Standard Companies, Inc., Kohler Co.

2.9 LAVATORIES (LAV1, LAV1H, LAV2, LAV2H, LAV3)

A. Lavatories:

1. Basis-of-Design Products: Provide basis-of design products specified in Plumbing Fixture schedule on drawings.
2. Approved Manufacturers: American Standard Companies, Inc., Crane Plumbing, LLC, Kohler Co.

2.10 COUNTER-MOUNT GENERAL USE SINKS, AND COMBINATION SINK-FOUNTAINS (S1H, S2, S3H, S4H, SDF1H)

A. Counter-Mount General Use Sinks, and Combination Sink-Fountains:

1. Basis-of-Design Products: Provide basis-of design products specified in Plumbing Fixture schedule on drawings
2. Approved Manufacturers: Just Manufacturing, Elkay Manufacturing Co.

2.11 COUNTER-MOUNT DROP-IN CHEMICAL-RESISTANT SCIENCE CLASSROOM SINKS (S5, S5H, S6H, S7)

A. Counter-Mount Drop-In, Chemical-Resistant Science Classroom Sinks:

1. Basis-of-Design Products: Provide basis-of design products specified in Plumbing Fixture schedule on drawings
   Approved Manufacturers: Epoxyn, Durcon, Inc., LabFixtures.com

2.12 JANITOR'S MOP SERVICE BASINS -FLOOR-MOUNTED (MSB1, MSB2)

A. Floor-Mounted Janitor's Sink:

1. Basis-of-Design Products: Provide basis-of design products specified in Plumbing Fixture schedule on drawings.

2. Approved Manufacturers: Fiat, Swanstone, Florestone

2.13 ACCESSIBLE ROLL-IN SHOWER (SH1H)

A. Accessible Roll-in Shower:

1. Note: Enclosure to be provided under other Divisions; provide drain and controls.
2. Basis-of-Design Products: Provide basis-of design products specified in Plumbing Fixture schedule on drawings.
3. Approved Manufacturers:
   a. Drain: Wade, Josam, Jay R Smith
   b. Controls: Symmons, Moen Commercial, American Standard

2.14 JANITOR'S MOP SERVICE BASINS -FLOOR-MOUNTED (MSB1 and MSB2)

A. Floor-Mounted Janitor's Sinks:

1. Basis-of-Design Products: Provide basis-of design products specified in Plumbing Fixture schedule on drawings.
2. Approved Manufacturers: Fiat, Swanstone, Florestone

2.15 OWNER-FURNISHED OR OTHER DIVISION-FURNISHED EQUIPMENT AND FIXTURES

A. Equipment or fixtures marked with an asterisk (*) on the Plumbing Drawings are to be furnished either by the Owner or under another Division. Contractor shall rough for and make final plumbing service connections to same.

PART 3 - EXECUTION

3.1 EXAMINATION

A. Examine roughing-in of water supply and sanitary drainage and vent piping systems to verify actual locations of piping connections before plumbing fixture installation.

B. Examine cabinets, counters, floors, and walls for suitable conditions where fixtures will be installed.

C. Proceed with installation only after unsatisfactory conditions have been corrected.

3.2 INSTALLATION

A. Assemble plumbing fixtures, trim, fittings, and other components according to manufacturers' written instructions.

B. Install off-floor supports, affixed to building substrate, for wall-mounting fixtures.

1. Use carrier supports with waste fitting and seal for back-outlet fixtures.
2. Use carrier supports without waste fitting for fixtures with tubular waste piping.
3. Use chair-type carrier supports with rectangular steel uprights for accessible fixtures.

C. Install back-outlet, wall-mounting fixtures onto waste fitting seals and attach to supports.

D. Install floor-mounting fixtures on closet flanges or other attachments to piping or building substrate.

E. Install wall-mounting fixtures with tubular waste piping attached to supports.

F. Install floor-mounting, back-outlet water closets attached to building floor substrate and wall bracket and onto waste fitting seals.

G. Install counter-mounting fixtures in and attached to casework.

H. Install fixtures level and plumb according to roughing-in drawings.

I. Install water-supply piping with stop on each supply to each fixture to be connected to water distribution piping. Attach supplies to supports or substrate within pipe spaces behind fixtures. Install stops in locations where they can be easily reached for operation.

1. Exception: Use ball, gate, or globe valves if supply stops are not specified with fixture. Valves are specified in Section 220523 "General-Duty Valves for Plumbing Piping."

J. Install trap and tubular waste piping on drain outlet of each fixture to be directly connected to sanitary drainage system.

K. Install tubular waste piping on drain outlet of each fixture to be indirectly connected to drainage system.

L. Install flushometer valves for accessible water closets and urinals with handle mounted on wide side of compartment. Install other actuators in locations that are easy for people with disabilities to reach.

M. Install toilet seats on water closets.

N. Install faucet-spout fittings with specified flow rates and patterns in faucet spouts if faucets are not available with required rates and patterns. Include adapters if required.

O. Install water-supply flow-control fittings with specified flow rates in fixture supplies at stop valves.

P. Install faucet flow-control fittings with specified flow rates and patterns in faucet spouts if faucets are not available with required rates and patterns. Include adapters if required.

Q. Install traps on fixture outlets.

1. Exception: Omit trap on fixtures with integral traps.
2. Exception: Omit trap on indirect wastes, unless otherwise indicated.

R. Install escutcheons at piping wall ceiling penetrations in exposed, finished locations and within cabinets and millwork. Use deep-pattern escutcheons if required to conceal protruding fittings. Escutcheons are specified in Section 220500 "Common Work Results for Plumbing."

S. Set service basins in leveling bed of cement grout. Grout is specified in Section 220500 "Common Work Results for Plumbing."

T. Seal joints between fixtures and walls, floors, and countertops using sanitary-type, one-part, mildew-resistant silicone sealant. Match sealant color to fixture color. Sealants are specified in Section 079200 "Joint Sealants."

3.3 CONNECTIONS

A. Piping installation requirements are specified in other Division 22 Sections. Drawings indicate general arrangement of piping, fittings, and specialties.

B. Connect fixtures with water supplies, stops, and risers, and with traps, soil, waste, and vent piping. Use size fittings required to match fixtures.

C. Coordinate power wiring to low voltage faucet and flush valve control system with Electrical Contractor.

D. Ground equipment according to Section 260526 "Grounding and Bonding for Electrical Systems."

E. Connect low voltage faucet and flush valve control wiring according to Section 260519 "Low-Voltage Electrical Power Conductors and Cables."

3.4 FIELD QUALITY CONTROL

A. Verify that installed plumbing fixtures are categories and types specified for locations where installed.

B. Check that plumbing fixtures are complete with trim, faucets, fittings, and other specified components.

C. Inspect installed plumbing fixtures for damage. Replace damaged fixtures and components.

D. Test installed fixtures after water systems are pressurized for proper operation. Replace malfunctioning fixtures and components, then retest. Repeat procedure until units operate properly.

3.5 ADJUSTING

A. Operate and adjust faucets and controls. Replace damaged and malfunctioning fixtures, fittings, and controls.

B. Adjust water pressure at faucets and flushometer valves to produce proper flow and stream.

C. Replace washers and seals of leaking and dripping faucets and stops.

3.6 CLEANING

A. Clean fixtures, faucets, and other fittings with manufacturers' recommended cleaning methods and materials. Do the following:

1. Remove faucet spouts and strainers, remove sediment and debris, and reinstall strainers and spouts.
2. Remove sediment and debris from drains.

B. After completing installation of exposed, factory-finished fixtures, faucets, and fittings, inspect exposed finishes and repair damaged finishes.

3.7 PROTECTION

A. Provide protective covering for installed fixtures and fittings.

B. Do not allow use of plumbing fixtures for temporary facilities unless approved in writing by Owner.

END OF SECTION 224000

SECTION 224500 - EMERGENCY PLUMBING FIXTURES

PART 1 - GENERAL

1.1 RELATED DOCUMENTS

A. Drawings and general provisions of the Contract, including General and Supplementary Conditions and Division 01 Specification Sections, apply to this Section.

1.2 SUMMARY

A. This Section includes the following emergency plumbing fixtures:
   1. Eye/face wash equipment.
   2. Water-tempering equipment.
   3. Emergency fixture alarm system.

B. Related Sections include the following:

   1. Division 22 Section "Domestic Water Piping Specialties" for backflow preventers.
   2. Division 22 Section "Sanitary Waste Piping Specialties" for floor drains.

1.3 DEFINITIONS

A. Accessible Fixture: Emergency plumbing fixture that can be approached, entered, and used by people with disabilities.

B. Plumbed Emergency Plumbing Fixture: Fixture with fixed, potable-water supply.

C. Tepid: 85 degrees F.

1.4 SUBMITTALS

A. Product Data: For each type of product indicated. Include flow rates and capacities, furnished specialties, and accessories.

B. Shop Drawings: Diagram power, signal, and control wiring.

C. Product Certificates: Submit certificates of performance testing specified in "Source Quality Control" Article.

D. Field quality-control test reports.

E. Operation and Maintenance Data: For emergency plumbing fixtures to include in maintenance manuals.

1.5 QUALITY ASSURANCE

A. Electrical Components, Devices, and Accessories: Listed and labeled as defined in NFPA 70, Article 100, by testing agency acceptable to authorities having jurisdiction, and marked for intended use.

B. ANSI Standard: Comply with ANSI Z358.1, "Emergency Eyewash and Shower Equipment."

C. Regulatory Requirements: Comply with requirements in ICC A117.1, "Accessible and Usable Buildings and Facilities"; Public Law 90-480, "Architectural Barriers Act"; and Public Law 101-336, "Americans with Disabilities Act"; for plumbing fixtures for people with disabilities.

D. NSF Standard: Comply with NSF 61, "Drinking Water System Components--Health Effects," and NSF 372 Lead-Free ANSI 3rd Party Certified, for fixture materials that will be in contact with potable water.

PART 2 - PRODUCTS

2.1 EYE/FACE WASH EQUIPMENT

A. Accessible, Wall-Mounted, Plumbed, Eye/Face Wash Units (EEW1H):
1. Basis-of-Design Product: Subject to compliance with requirements, provide product indicated on Drawings or comparable product by one of the following:

a. Bradley Corporation
b. Guardian Equipment Co.
c. Haws Corporation.

2. Capacity: Not less than 3.0 gpm (11.4 L/min.) for at least 15 minutes.
3. Supply Piping: NPS 1/2 (DN 15) chrome-plated brass or stainless steel with flow regulator and stay-open control valve.
4. Control-Valve Actuator: Paddle.
5. Spray-Head Assembly: Two or four receptor-mounted spray heads.
6. Receptor: Stainless-steel bowl.
7. Mounting: Wall bracket.
8. Special Construction: Comply with ICC/ANSI A117.1.
9. Local Flow Alarm: Required.

2.2 WATER-TEMPERING EQUIPMENT

A. Water-Tempering Equipment, (TMV2)

1. Manufacturers: Subject to compliance with requirements, provide products by one of the following:
a. Bradley Corporation.

b. Haws Corporation.
c. Lawler Manufacturing Co., Inc.

2. Basis-of-Design Product: Refer to Plumbing Fixture Schedule under EEW1H for Basis-of-Design product.

3. Description: Factory-fabricated, hot- and cold-water-tempering equipment with thermostatic mixing valve.

a. Thermostatic Mixing Valve: Designed to provide 85 deg F (29 deg C) tepid, potable water at emergency plumbing fixtures, to maintain temperature at plus or minus 5 deg F (3 deg C) with a flow of 3 gpm throughout required 15-minute test period, and in case of unit failure to continue cold-water flow, with union connections, controls, metal piping, and corrosion-resistant enclosure. Cabinet: TMV Manufacturer's recessed locking wall cabinet, stainless steel.

2.3 EMERGENCY FIXTURE ACCESSORIES

A. For each emergency fixture, provide ANSI identification.

B. For each emergency fixture, provide manufacturer's emergency fixture-specific flow switch alarm system (120 volt/1 phase) on tempered water supply to emergency fixture. Locate flow switch sensor on supply pipe above ceiling, oriented per manufacturer's requirements. For combination emergency units, locate horn/strobe high on side of emergency fixture's vertical supply pipe. For wall-mounted eyewash and eye/facewash units, locate horn/strobe high on wall behind emergency fixture, and centered on fixture.

2.4 SOURCE QUALITY CONTROL

A. Certify performance of plumbed emergency plumbing fixtures by independent testing agency acceptable to authorities having jurisdiction.

PART 3 - EXECUTION

3.1 EXAMINATION

A. Examine roughing-in for water and waste piping systems to verify actual locations of piping connections before plumbed emergency plumbing fixture installation.

1. Proceed with installation only after unsatisfactory conditions have been corrected.

3.2 EMERGENCY PLUMBING FIXTURE INSTALLATION

A. Assemble emergency plumbing fixture piping, fittings, control valves, and other components.

B. Install fixtures level and plumb.

C. Fasten fixtures to substrate.

D. Install shutoff valves in water-supply piping to fixtures. Use ball, gate, or globe valve if specific type valve is not indicated. Install valves chained or locked in open position if permitted. Install valves in locations where they can easily be reached for operation. Valves are specified in Division 22 Section "General-Duty Valves For Plumbing Piping."

1. Exception: Omit shutoff valve on supply to group of plumbing fixtures that includes emergency plumbing fixture.
2. Exception: Omit shutoff valve on supply to emergency equipment if prohibited by authorities having jurisdiction.

E. Install dielectric fitting in supply piping to fixture if piping and fixture connections are made of different metals. Dielectric fittings are specified in Division 22 Section "Common Work Results for Plumbing."

F. Install thermometers in supply and outlet piping connections to water-tempering equipment. Thermometers are specified in Division 22 Section "Meters and Gages for Plumbing Piping."

G. Install trap and waste to wall on drain outlet of fixture receptors that are indicated to be directly connected to drainage system (eye/face wash bowl).

H. Install escutcheons on piping wall and ceiling penetrations in exposed, finished locations. Escutcheons are specified in Division 22 Section "Escutcheons for Plumbing Piping."

I. Install equipment nameplates or equipment markers on fixtures and equipment signs on water-tempering equipment. Identification materials are specified in Division 22 Section "Identification for Plumbing Piping and Equipment."

J. Install flow switch alarm system components; wiring is specified in Division 26.

3.3 CONNECTIONS

A. Piping installation requirements are specified in other Division 22 Sections. Drawings indicate general arrangement of piping, fittings, and specialties.

B. Connect hot- and cold-water-supply piping to hot- and cold-water-tempering equipment. Connect output from water-tempering equipment to emergency plumbing fixtures.

C. Directly connect emergency plumbing fixture (eye/face) receptors with trapped drain outlet to sanitary drainage (and vent piping, unless the drainage system is the combination drainage/vent type).

D. Ground equipment according to Division 26 Section "Grounding and Bonding for Electrical Systems."

E. Connect wiring according to Division 26 Section "Low-Voltage Electrical Power Conductors and Cables."

3.4 FIELD QUALITY CONTROL

A. Mechanical-Component Testing: After plumbing connections have been made, test for leaks. Repair leaks and retest until no leaks exist. Test compliance with requirements. Verify ability to achieve indicated capacities and temperatures.

B. Electrical-Component Testing: After electrical circuitry has been energized, test for compliance with requirements.

1. Test and adjust controls and safeties.

C. Repair or replace malfunctioning units. Retest as specified above after repairs or replacements are made.

D. Report test results in writing.

3.5 ADJUSTING

A. Adjust or replace fixture flow regulators for proper flow.

B. Adjust equipment temperature settings.

END OF SECTION 224500

SECTION 224700 - DRINKING FOUNTAINS AND WATER COOLERS

PART 1 - GENERAL

1.1 RELATED DOCUMENTS

A. Drawings and general provisions of the Contract, including General and Supplementary Conditions and Division 01 Specification Sections, apply to this Section.

1.2 SUMMARY

A. This Section includes the following drinking fountains, water coolers and related components:

1. Water coolers.
2. Fixture supports.

1.3 DEFINITIONS

A. Accessible Drinking Fountain or Water Cooler: Fixture that can be approached and used by people with disabilities.

B. Cast Polymer: Dense, cast-filled-polymer plastic.

C. Drinking Fountain: Fixture with nozzle for delivering stream of water for drinking.

D. Fitting: Device that controls flow of water into or out of fixture.

E. Fixture: Drinking fountain or water cooler unless one is specifically indicated.

F. Remote Cooler: Electrically powered equipment for generating cooled drinking water.

G. Water Cooler: Electrically powered fixture for generating and delivering cooled drinking water.

1.4 SUBMITTALS

A. Product Data: For each fixture indicated. Include rated capacities, furnished specialties, and accessories.

B. HPBS Submittals:

1. Product Data for Sections 16a-38k-3(f) and 16a-38k-6(c)(1): Documentation indicating flow and water consumption requirements.

C. Shop Drawings: Diagram power, signal, and control wiring.

D. Field quality-control test reports.

E. Operation and Maintenance Data: For fixtures to include in emergency, operation, and maintenance manuals.

1.5 QUALITY ASSURANCE

A. Electrical Components, Devices, and Accessories: Listed and labeled as defined in NFPA 70, Article 100, by a testing agency acceptable to authorities having jurisdiction, and marked for intended use.

B. Regulatory Requirements: Comply with requirements in ICC A117.1, "Accessible and Usable Buildings and Facilities"; Public Law 90-480, "Architectural Barriers Act"; and Public Law 101-336, "Americans with Disabilities Act"; for fixtures for people with disabilities.

C. NSF Standard: Comply with NSF 61, "Drinking Water System Components--Health Effects," for fixture materials that will be in contact with potable water.

D. ARI Standard: Comply with ARI's "Directory of Certified Drinking Water Coolers" for style classifications.

E. ARI Standard: Comply with ARI 1010, "Self-Contained, Mechanically Refrigerated Drinking-Water Coolers," for water coolers and with ARI's "Directory of Certified Drinking Water Coolers" for type and style classifications.

F. ASHRAE Standard: Comply with ASHRAE 34, "Designation and Safety Classification of Refrigerants," for water coolers. Provide HFC 134a (tetrafluoroethane) refrigerant, unless otherwise indicated.

1.6 EXTRA MATERIALS

A. Furnish extra materials described below that match products installed and that are packaged with protective covering for storage and identified with labels describing contents.

1. Filter Cartridges: No fewer than three (3) of each type and size installed.

PART 2 - PRODUCTS

2.1 WATER COOLERS

A. Water Coolers-Bi-Level (EWC1H):

1. Available Manufacturers: Subject to compliance with requirements, manufacturers offering products that may be incorporated into the Work include, but are not limited to, the following:

a. Elkay Manufacturing Company
b. Haws Corporation
c. Halsey Taylor

2. Basis-of-Design Product: Refer to Plumbing Fixture Schedule for Basis-of-Design product.
3. Description: Bi-Level, Accessible, GreenSpec listed, wall-mounting water cooler with integral chiller unit.

a. Material: Stainless steel.

b. Receptor Shape: Rectangular.
c. Bubblers: Two (2), (one (1) for each basin) with adjustable stream regulator, located on deck.
d. Control: Push bar (one for each basin).
e. Supply: NPS 3/8 (DN 10) with ball, gate, or globe valve (one (1) supply for each basin).
f. Drain: Grid with NPS 1-1/4 (DN 32) minimum horizontal waste and trap complying with ASME A112.18.2 (one (1) drain for each basin; higher drain connects to lower drain; one (1) 1½ inch drain into wall).
g. Apron: Provide manufacturer's cane touch apron on higher basin.
h. Support: Type I, water cooler carrier. Refer to "Fixture Supports" Article.

B. Water Coolers-Single Basin with Self-Contained Chiller (EWC2H):

1. Available Manufacturers: Subject to compliance with requirements, manufacturers offering products that may be incorporated into the Work include, but are not limited to, the following:

a. Elkay Manufacturing Company
b. Haws Corporation
c. Halsey Taylor

2. Basis-of-Design Product: Refer to Plumbing Fixture Schedule for Basis-of-Design product.
3. Description: Single Basin Accessible, GreenSpec listed, wall-mounting water cooler with integral chiller unit.

a. Material: Stainless steel.
b. Receptor Shape: Rectangular.
c. Bubblers: Flexible, with adjustable stream regulator, located on deck.
d. Control: Push bar
e. Supply: NPS 3/8 (DN 10) with ball, gate, or globe valve.
f. Drain: Grid with NPS 1-1/4 (DN 32) minimum horizontal waste and trap complying with ASME A112.18.2.
g. Support: Type I, water cooler carrier. Refer to "Fixture Supports" Article.

C. Water Coolers-Single Basin with External Chiller (EWC3H):

1. Available Manufacturers: Subject to compliance with requirements, manufacturers offering products that may be incorporated into the Work include, but are not limited to, the following:

a. Elkay Manufacturing Company
b. Haws Corporation
c. Halsey Taylor

2. Basis-of-Design Product: Refer to Plumbing Fixture Schedule for Basis-of-Design product.
3. Description: Single Basin Accessible, GreenSpec listed, wall-mounting water cooler with chiller unit recessed in chase behind wall grille.

a. Material: Stainless steel, including wall panel and grille.
b. Receptor Shape: Round.
c. Bubblers: Flexible, with adjustable stream regulator, located on deck.
d. Control: Push bar
e. Supply: NPS 3/8 (DN 10) with ball, gate, or globe valve.
f. Drain: Grid with NPS 1-1/4 (DN 32) minimum horizontal waste and trap complying with ASME A112.18.2.
Support: Manufacturer's wall mounting frame. Refer to Water Cooler Fixture Supports article, this section.

2.2 WATER COOLER FIXTURE SUPPORTS

A. Manufacturers: Provide water cooler manufacturer's wall mounting package, including wall hangers.

B. Provide steel wall reinforcement as required by manufacturer's installation instructions, but not less than 300 pound static load capability at all areas of fixture attachment to wall.

PART 3 - EXECUTION

3.1 EXAMINATION

A. Examine roughing-in for water and waste piping systems to verify actual locations of piping connections before fixture installation. Verify that sizes and locations of piping and types of supports match those indicated.

B. Examine walls and floors for suitable conditions where fixtures are to be installed.

C. Proceed with installation only after unsatisfactory conditions have been corrected.

3.2 APPLICATIONS

A. Use carrier off-floor supports for wall-mounting fixtures, unless otherwise indicated.

B. Use chrome-plated brass or copper tube, fittings, and valves in locations exposed to view. Plain copper tube, fittings, and valves may be used in concealed locations.

3.3 INSTALLATION

A. Install off-floor supports affixed to building substrate and attach wall-mounting fixtures, unless otherwise indicated.

B. Install fixtures level and plumb. For fixtures indicated for children, install at height required by authorities having jurisdiction.

C. Install water-supply piping with shutoff valve on supply to each fixture to be connected to water distribution piping. Use ball, gate, or globe valve. Install valves in locations where they can be easily reached for operation. Valves are specified in Section 220523 "General-Duty Valves for Plumbing Piping."

D. Install trap and waste piping on drain outlet of each fixture to be connected to sanitary drainage system.

E. Install pipe escutcheons at wall penetrations in exposed, finished locations. Use deep-pattern escutcheons where required to conceal protruding pipe fittings. Escutcheons are specified in Section 220500 "Common Work Results for Plumbing."

F. Seal joints between fixtures and walls and floors using sanitary-type, one-part, mildew-resistant, silicone sealant. Match sealant color to fixture color. Sealants are specified in Section 079200 "Joint Sealants."

3.4 CONNECTIONS

A. Piping installation requirements are specified in other Division 22 Sections. Drawings indicate general arrangement of piping, fittings, and specialties.

B. Connect water service piping to water cooler's water inlet, with filter and stops.

C. Connect fixtures with traps, soil, waste, and vent piping. Use size fittings required to match fixtures.

D. Ground equipment according to Section 260526 "Grounding and Bonding for Electrical Systems."

E. Connect wiring according to Section 260519 "Low-Voltage Electrical Power Conductors and Cables."

3.5 FIELD QUALITY CONTROL

A. Water Cooler Testing: After electrical circuitry has been energized, test for compliance with requirements. Test and adjust controls and safeties.

1. Remove and replace malfunctioning units and retest as specified above.
2. Report test results in writing.

3.6 ADJUSTING

A. Adjust fixture flow regulators for proper flow and stream height.

B. Adjust water cooler temperature settings.

3.7 CLEANING

A. After completing fixture installation, inspect unit. Remove paint splatters and other spots, dirt, and debris. Repair damaged finish to match original finish.

B. Clean fixtures, on completion of installation, according to manufacturer's written instructions.

END OF SECTION 224700

SECTION 230000 – BASIC MECHANICAL REQUIREMENTS

PART 1 – GENERAL

1.1 RELATED DOCUMENTS

A. The Contractor, Subcontractors, and /or suppliers providing goods and services referenced in or related to this section will be required to support the Commissioning effort in accordance with the requirements identified in Division 01 Section 019113 General Commissioning Requirements.

B. Basic Mechanical Requirements specifically applicable to Division 23 Sections in addition to Division 1 – General Requirements.

1.2 INTENT

A. It is the intention of the Specifications and Drawings to call for finished work, tested and ready for operation. All materials, equipment and apparatus shall be new and of first class quality.

B. Any apparatus, appliance, material or work not shown on Drawings, but mentioned in the Specifications, or vice versa, or any incidental accessories or minor details not shown, but necessary to make the work complete and perfect in all respects and ready for operation, even if not particularly specified, shall be provided by the contractor without additional expense to the owner.

C. With submission of bid, the Contractor shall give notice to the Engineer of any materials apparatus or omissions believed to be in violation of laws, ordinances, rules or regulations or authorities having jurisdiction. In the absence of such written notice, it is mutually agreed that the Contractor shall include the cost of providing all systems in accordance with applicable regulations without extra compensation.

1.3 SUBMITTALS

A. Submit under provisions of Division 1 Sections.

B. Include products as required by individual Sections.

C. Submit Shop Drawings and Product Data grouped to include complete submittals of related systems, products and accessories in a single submittal.

D. Mark dimensions and values in units to match those specified.

E. Submit plan indicating measures being taken to maintain indoor air quality of occupied portion of building during construction.

1.4 DRAWINGS AND COORDINATION

A. Drawings are schematic in nature and do not indicate every item, piece of equipment and detail. Provide complete, operating systems.

B. Install work as closely as possible to layouts shown on drawings. Modify work as necessary to meet job conditions and to clear other equipment. Consult Architect before making changes which affect the function or appearance of systems.

C. Dimensions, elevations and locations are shown approximately. Verify dimensions in field.

D. Architect reserves the right to order changes in layout of such items as piping, ducts and equipment if such changes do not substantially effect costs and if effected items have not been fabricated or installed.

E. In some cases, drawings are based on products of one or several manufacturers, as listed on Contract Documents. Contractor shall be responsible for modifications made necessary by substitution of products of other manufacturers. Modifications may be required in electrical distribution materials and components, structural supports, concrete pads, gas piping, breeching and chimneys, etc.

F. Do not install part of a system until all critical components of the system and related systems have been approved. Coordinate parts of systems.

G. Coordinate work with work specified in other Sections. Relocate work if required for proper installation and functioning of other systems.

H. Install products in accordance with manufacturer's instructions. Notify Architect if Contract Documents conflict with manufacturer's instructions. Comply with Architect's interpretations.

I. Provide brackets, supports, anchors and frames required for installation of work specified in this division. Such metal work shall conform to the requirements of Section 05500.

J. Where Contract Documents provide conflicting information, Contractor shall be responsible for design having highest cost.

1.5 PROJECT RECORD DRAWINGS

A. Prepare project Record Drawings of mechanical systems in conformance with the requirements of the General Conditions and Division 1 Sections.

1.6 INDOOR AIR QUALITY

A. Provide measures to maintain minimum standard for indoor air quality in accordance with SMACNA guidelines, by preventing air contaminated by demolition and construction activities from being transferred to occupied portions of building when work includes renovation, addition or alteration to building occupied during demolition/construction.

B. Measures shall include but not be limited to the following:

1. Air filtration.
2. Temporarily sealing ductwork, air inlets and outlets and ventilation openings to prevent transfer of contaminated air.
3. Installation of bypass ducts or openings and additional temporary system modifications as required to prevent cross contamination, and to maintain proper system operation during construction.

C. Submit plan of cross contamination control measures in accordance with SMACNA guidelines prior to beginning construction.

1.7 PRELIMINARY OPERATION

A. Operate mechanical systems with required supervision for at least two full days prior to substantial completion. Make necessary adjustments and check proper operation.

1.8 TESTS PRIOR TO SUBSTANTIAL COMPLETION

A. Tests shall be attended by representatives of mechanical subcontractors, equipped with instruments required to demonstrate proper functioning of systems, as specified. Demonstrate the following:

1. Equipment installed and operating in accordance with the manufacturer's specifications and instructions and with these specifications.
2. Safety and temperature controls operating as specified.
3. Systems properly flushed, cleaned and free of contaminants.
4. Systems properly balanced.
5. Motors equipped with proper overload protection and not operating under overload. Obtain ammeter readings.
6. Instruments recording properly.
7. Submit report listing system tested, date, results and description of fault

corrections, if any.

1.9 WARRANTY

A. Subcontractors shall provide a One (1) Year Labor & Material Warranty that all materials and equipment furnished shall be new and of good quality, free from faults and defects and in conformance with the Contract Documents. Any defects due to faulty workmanship or materials which appear during the first year shall be corrected by the subcontractor at no additional cost to the Construction Manager or Town of Berlin. The Warranty will be the responsibility of the subcontractor for a period of one (1) year from the date of Substantial Completion for that particular building area as the construction phases are completed.

B. For all major pieces of equipment, the Warranty will commence after the equipment has been put into permanent operating mode, equipment and components have been commissioned and accepted by the Commissioning Agent, and the Operating & Maintenance Manuals have been submitted and approved.

C. The subcontractor shall, through a Bid Alternate, provide the cost of providing routine maintenance services as documented by manufacturer's operating and maintenance literature. Subcontractor shall be responsible for the manufacturer's recommended maintenance procedures for a period of one (1) year from the time the Warranty commences or until completion of the entire construction project, whichever is later.

D. Submit written warranties covering work specified in Division 23.

1.10 OPERATING AND MAINTENANCE MANUALS

A. Submit Operating and Maintenance manuals in accordance with this Section and Division 1 Sections.

B. Include operating and maintenance instructions for equipment where applicable.

C. List replacement parts and order procedure.

D. Include lubrication instructions and schedule, with types of lubricant to be used.

E. Instruct Owner's personnel in use of equipment specified in this Division.

1.11 REGULATORY REQUIREMENTS

A. Conform to applicable provisions of the Connecticut Basic Building Code which

include the following:

1. 2003 International Building Code.
2. 2003 International Mechanical Code.
3. 2003 International Plumbing Code.

B. Amendments, alterations, deletions and addition of certain provisions to the above as indicated in Connecticut Supplement.

C. All work will conform to applicable provisions of the Connecticut Public Health Code.

D. Indoor air quality during construction will be maintained in accordance with SMACNA IAQ Guidelines for Occupied Buildings under Construction.

E. All work will also conform to applicable provisions of the Connecticut Fire Safety Code.

F. Work of this project shall be barrier free and will conform to the Americans with Disabilities Act (ADA), ICC/ANSI 117.1, 2003 and Uniform Federal Accessibility Standards (UFAS).

G. New construction and renovation work will comply with the requirements of the 2009 International Energy Conservation Code.

H. Conform to applicable Town of Ellington requirements.

I. Obtain and pay for permits and inspections from authorities having jurisdiction.

2 PART 2 – PRODUCTS

Not Used

3 PART 3 – EXECUTION

Not Used

END OF SECTION

SECTION 230500 - COMMON WORK RESULTS FOR HVAC

PART 1 - GENERAL

1.1 RELATED DOCUMENTS

A. Drawings and general provisions of the Contract, including General and Supplementary Conditions and Division 01 Specification Sections, apply to this Section.

B. The Contractor, Subcontractors, and /or suppliers providing goods and services referenced in or related to this section will be required to support the Commissioning effort in accordance with the requirements identified in Division 01 Section 019113 “General Commissioning Requirements”.

1.2 SUMMARY

A. This Section includes the following:

1. Piping materials and installation instructions common to most piping systems.
2. Transition fittings.
3. Dielectric fittings.
4. Mechanical sleeve seals.
5. Sleeves.
6. Stack Sleeve Fittings
7. Escutcheons.
8. Grout.
9. Mechanical demolition.
10. Equipment installation requirements common to equipment sections.
11. Painting and finishing.
12. Concrete bases.
13. Supports and anchorages.

1.3 DEFINITIONS

A. Finished Spaces: Spaces other than mechanical and electrical equipment rooms, furred spaces, pipe and duct chases, unheated spaces immediately below roof, spaces above ceilings, unexcavated spaces, crawlspaces, and tunnels.

B. Exposed, Interior Installations: Exposed to view indoors. Examples include finished occupied spaces and mechanical equipment rooms.

C. Exposed, Exterior Installations: Exposed to view outdoors or subject to outdoor ambient temperatures and weather conditions. Examples include rooftop locations.

D. Concealed, Interior Installations: Concealed from view and protected from physical contact by building occupants. Examples include above ceilings and chases.

E. Concealed, Exterior Installations: Concealed from view and protected from weather conditions and physical contact by building occupants but subject to outdoor ambient temperatures. Examples include installations within unheated shelters.

F. The following are industry abbreviations for plastic materials:

1. CPVC: Chlorinated polyvinyl chloride plastic.
2. PVC: Polyvinyl chloride plastic.

G. The following are industry abbreviations for rubber materials:

1. EPDM: Ethylene-propylene-diene terpolymer rubber.
2. NBR: Acrylonitrile-butadiene rubber.

1.4 SUBMITTALS

A. Product Data: For the following:

1. Transition fittings.
2. Dielectric fittings.
3. Mechanical sleeve seals.
4. Escutcheons.

B. Welding certificates.

1.5 QUALITY ASSURANCE

A. Steel Support Welding: Qualify processes and operators according to AWS D1.1, "Structural Welding Code--Steel."

B. Steel Pipe Welding: Qualify processes and operators according to ASME Boiler and Pressure Vessel Code: Section IX, "Welding and Brazing Qualifications."

1. Comply with provisions in ASME B31 Series, "Code for Pressure Piping."
2. Certify that each welder has passed AWS qualification tests for welding processes involved and that certification is current.

C. Electrical Characteristics for HVAC Equipment: Equipment of higher electrical characteristics may be furnished provided such proposed equipment is approved in writing and connecting electrical services, circuit breakers, and conduit sizes are appropriately modified. If minimum energy ratings or efficiencies are specified, equipment shall comply with requirements.

1.6 DELIVERY, STORAGE, AND HANDLING

A. Deliver pipes and tubes with factory-applied end caps. Maintain end caps through shipping, storage, and handling to prevent pipe end damage and to prevent entrance of dirt, debris, and moisture.

B. Store plastic pipes protected from direct sunlight. Support to prevent sagging and bending.

1.7 COORDINATION

A. Arrange for pipe spaces, chases, slots, and openings in building structure during progress of construction, to allow for HVAC installations.

B. Coordinate installation of required supporting devices and set sleeves in poured-in-place concrete and other structural components as they are constructed.

C. Coordinate requirements for access panels and doors for HVAC items requiring access that are concealed behind finished surfaces. Access panels and doors are specified in Division 08 Section "Access Doors and Frames."

PART 2 - PRODUCTS

2.1 MANUFACTURERS

A. In other Part 2 articles where subparagraph titles below introduce lists, the following requirements apply for product selection:
   1. Manufacturers: Subject to compliance with requirements, provide products by the manufacturers specified.

2.2 PIPE, TUBE, AND FITTINGS

A. Refer to individual Division 23 piping Sections for pipe, tube, and fitting materials and joining methods.

B. Pipe Threads: ASME B1.20.1 for factory-threaded pipe and pipe fittings.

2.3 JOINING MATERIALS

A. Refer to individual Division 23 piping Sections for special joining materials not listed below.

B. Pipe-Flange Gasket Materials: Suitable for chemical and thermal conditions of piping system contents.

   1. ASME B16.21, nonmetallic, flat, asbestos-free, 1/8-inch (3.2-mm) maximum thickness unless thickness or specific material is indicated.

      a. Full-Face Type: For flat-face, Class 125, cast-iron and cast-bronze flanges.
      b. Narrow-Face Type: For raised-face, Class 250, cast-iron and steel flanges.

   2. AWWA C110, rubber, flat face, 1/8 inch (3.2 mm) thick, unless otherwise indicated; and full-face or ring type, unless otherwise indicated.

C. Flange Bolts and Nuts: ASME B18.2.1, carbon steel, unless otherwise indicated.

D. Plastic, Pipe-Flange Gasket, Bolts, and Nuts: Type and material recommended by piping system manufacturer, unless otherwise indicated.

E. Solder Filler Metals: ASTM B 32, lead-free alloys. Include water-flushable flux according to ASTM B 813.

F. Brazing Filler Metals: AWS A5.8, BCuP Series, copper-phosphorus alloys for general-duty brazing, unless otherwise indicated; and AWS A5.8, BAg1, silver alloy for refrigerant piping, unless otherwise indicated.

G. Welding Filler Metals: Comply with AWS D10.12 for welding materials appropriate for wall thickness and chemical analysis of steel pipe being welded.

H. Solvent Cements for Joining Plastic Piping:

1. CPVC Piping: ASTM F 493.
2. PVC Piping: ASTM D 2564. Include primer according to ASTM F 656.

I. Fiberglass Pipe Adhesive: As furnished or recommended by pipe manufacturer.

2.4 TRANSITION FITTINGS

A. Plastic-to-Metal Transition Fittings: CPVC and PVC one-piece fitting with manufacturer's Schedule 80 equivalent dimensions; one end with threaded brass insert, and one solvent-cement-joint end.

1. Manufacturers:

a. Eslon Thermoplastics.

B. Plastic-to-Metal Transition Adaptors: One-piece fitting with manufacturer's SDR 11 equivalent dimensions; one end with threaded brass insert, and one solvent-cement-joint end.

1. Manufacturers:

a. Thompson Plastics, Inc.

C. Plastic-to-Metal Transition Unions: MSS SP-107, CPVC and PVC four-part union. Include brass end, solvent-cement-joint end, rubber O-ring, and union nut.

1. Manufacturers:

a. NIBCO INC.
b. NIBCO, Inc.; Chemtrol Div.

2.5 DIELECTRIC FITTINGS

A. Description: Combination fitting of copper alloy and ferrous materials with threaded, solder-joint, plain, or weld-neck end connections that match piping system materials.

B. Insulating Material: Suitable for system fluid, pressure, and temperature.

C. Dielectric Unions: Factory-fabricated, union assembly, for 250-psig (1725-kPa) minimum working pressure at 180 deg F (82 deg C).

1. Manufacturers:

a. Capitol Manufacturing Co.
b. Epco Sales, Inc.
c. Zurn Industries, Inc.; Wilkins Div.
d. Watts Industries, Inc.; Water Products Div.
e. Eclipse, Inc.

D. Dielectric Flanges: Factory-fabricated, companion-flange assembly, for 300-psig (2070-kPa) minimum working pressure as required to suit system pressures.

1. Manufacturers:

a. Capitol Manufacturing Co.
b. Epco Sales, Inc.
c. Watts Industries, Inc.; Water Products Div.

E. Dielectric-Flange Kits: Companion-flange assembly for field assembly. Include flanges, full-face- or ring-type neoprene or phenolic gasket, phenolic or polyethylene bolt sleeves, phenolic washers, and steel backing washers.

1. Manufacturers:
a. Capitol Manufacturing Co.
b. Advance Products & Systems, Inc.
c. Calpico, Inc.
d. Pipeline Seal and Insulator, Inc.

2. Separate companion flanges and steel bolts and nuts shall have 300-psig (2070-kPa) minimum working pressure where required to suit system pressures.

F. Dielectric Couplings: Galvanized-steel coupling with inert and noncorrosive, thermoplastic lining; threaded ends; and 300-psig (2070-kPa) minimum working pressure at 225 deg F (107 deg C).

1. Manufacturers:

a. Calpico, Inc.
b. Lochinvar Corp.

G. Dielectric Nipples: Electroplated steel nipple with inert and noncorrosive, thermoplastic lining; plain, threaded, or grooved ends; and 300-psig (2070-kPa) minimum working pressure at 225 deg F (107 deg C).

2. Manufacturers:

a. Perfection Corp.
b. Precision Plumbing Products, Inc.
c. Sioux Chief Manufacturing Co., Inc.

2.6 MECHANICAL SLEEVE SEALS

A. Description: Modular sealing element unit, designed for field assembly, to fill annular space between pipe and sleeve.

1. Manufacturers:

a. Link Seal System
b. Advance Products & Systems, Inc.
c. Metraflex Co.
d. Pipeline Seal and Insulator, Inc.
e. Calpico, Inc.

2. Sealing Elements: EPDM interlocking links shaped to fit surface of pipe. Include type and number required for pipe material and size of pipe.
3. Pressure Plates: Plastic. Include two for each sealing element.
4. Connecting Bolts and Nuts: Stainless Steel of length required to secure pressure plates to sealing elements. Include one for each sealing element.

2.7 SLEEVES

A. Galvanized-Steel-Pipe Sleeves: ASTM A 53/A 53M, Type E, Grade B, Schedule 40, zinc coated, with plain ends.

B. Galvanized-Steel Wall Pipes: ASTM A 53/A 53M, Schedule 40, with plain ends and welded steel collar; zinc coated.

C. Galvanized-Steel Sheet: 0.0239-inch (0.6-mm) minimum thickness; round tube closed with welded longitudinal joint.

D. Cast Iron: Cast or fabricated "wall pipe" equivalent to ductile-iron pressure pipe, with plain ends and integral waterstop, unless otherwise indicated.

E. Molded PVC: Permanent, with nailing flange for attaching to wooden forms.

F. PVC Pipe: ASTM D 1785, Schedule 80.

2.8 STACK SLEEVE FITTINGS

A. Manufacturers:

1. Smith, Jay R. Mfg. Co.
2. Zurn Specification Drainage Operation; Zurn Plumbing Products Group.

B. Description: Stack Sleeve Fittings: Manufactured, cast-iron sleeve with integral clamping flange. Include clamping ring and bolts and nuts for membrane flashing.

1. Underdeck Clamp: Clamping ring with set screws.

2.9 ESCUTCHEONS

A. Description: Manufactured wall and ceiling escutcheons and floor plates, with an ID to closely fit around pipe, tube, and insulation of insulated piping and an OD that completely covers opening.

B. One-Piece, Deep-Pattern Type: Deep-drawn, box-shaped brass with polished chrome-plated finish.

C. One-Piece, Cast-Brass Type: With set screw.

1. Finish: Polished chrome-plated

D. Split-Casting, Cast-Brass Type: With concealed hinge and set screw.

1. Finish**:** Polished chrome-plated.

E. One-Piece, Stamped-Steel Type: With set screw and chrome-plated finish.

F. Split-Plate, Stamped-Steel Type: With concealed hinge, set screw, and chrome-plated finish.

G. One-Piece, Floor-Plate Type: Cast-iron floor plate.

H. Split-Casting, Floor-Plate Type: Cast brass with concealed hinge and set screw.

2.10 GROUT

A. Description: ASTM C 1107, Grade B, nonshrink and nonmetallic, dry hydraulic-cement grout.

1. Characteristics: Post-hardening, volume-adjusting, nonstaining, noncorrosive, nongaseous, and recommended for interior and exterior applications.
2. Design Mix: 5000-psi (34.5-MPa), 28-day compressive strength.
3. Packaging: Premixed and factory packaged.

PART 3 - EXECUTION

3.1 COMMISSIONING OF SYSTEMS AND EQUIPMENT

A. Engage a factory-authorized service representative or technician who is familiar with this project to participate and assist, if necessary, in the functional performance testing of the equipment include in this Division with the Commissioning Agent.

3.2 MECHANICAL DEMOLITION

A. Refer to Division 01 Section "Cutting and Patching" and Division 02 Section "Selective Structure Demolition" for general demolition requirements and procedures.

B. Disconnect, demolish, and remove HVAC systems, equipment, and components indicated to be removed.

1. Piping to Be Removed: Remove portion of piping indicated to be removed and cap or plug remaining piping with same material.
2. Ducts to Be Removed: Remove portion of ducts indicated to be removed and pug remaining duct with same ductwork material.
3. Equipment to Be Removed: Disconnect and cap services and remove equipment.

C. If pipe, insulation, or equipment to remain is damaged in appearance or is unserviceable, remove damaged or unserviceable portions and replace with new products of equal capacity and quality. Where affected by demolition or new construction, relocate, extend or repair ductwork and piping to allow continued use of mechanical systems. Use methods and materials as specified for new construction.

D. Remove obsolete piping, ductwork, hangers, miscellaneous equipment promptly from site and dispose of legally.

3.3 PIPING SYSTEMS - COMMON REQUIREMENTS

A. Install piping according to the following requirements and Division 23 Sections specifying piping systems.

B. Drawing plans, schematics, and diagrams indicate general location and arrangement of piping systems. Indicated locations and arrangements were used to size pipe and calculate friction loss, expansion, pump sizing, and other design considerations. Install piping as indicated unless deviations to layout are approved on Coordination Drawings.

C. Install piping in concealed locations, unless otherwise indicated and except in equipment rooms and service areas.

D. Install piping indicated to be exposed and piping in equipment rooms and service areas at right angles or parallel to building walls. Diagonal runs are prohibited unless specifically indicated otherwise.

E. Install piping above accessible ceilings to allow sufficient space for ceiling panel removal.

F. Install piping to permit valve servicing.

G. Install piping at indicated slopes.

H. Install piping free of sags and bends.

I. Install fittings for changes in direction and branch connections.

J. Install piping to allow application of insulation.

K. Select system components with pressure rating equal to or greater than system operating pressure.

L. Install escutcheons for penetrations of walls, ceilings, and floors according to the following:

1. New Piping:

a. Piping with Fitting or Sleeve Protruding from Wall: One-piece, deep-pattern type.
b. Chrome-Plated Piping: One-piece, cast-brass type with polished chrome-plated finish.
c. Insulated Piping: One-piece, stamped-steel type with spring clips.
d. Bare Piping at Wall and Floor Penetrations in Finished Spaces: One-piece, cast-brass type with polished chrome-plated finish.
e. Bare Piping at Ceiling Penetrations in Finished Spaces: One-piece, cast-brass type with polished chrome-plated finish.
f. Bare Piping in Unfinished Service Spaces: One-piece, cast-brass type with polished chrome-plated finish.
g. Bare Piping in Equipment Rooms: One-piece, cast-brass type.
h. Bare Piping at Floor Penetrations in Equipment Rooms: One-piece, floor-plate type.

M. Sleeves are not required for core-drilled holes.

N. Permanent sleeves are not required for holes formed by removable PE sleeves.

O. Install sleeves for pipes passing through concrete and masonry walls and concrete floor and roof slabs.

P. Install sleeves for pipes passing through concrete and masonry walls, gypsum-board partitions, and concrete floor and roof slabs.

1. Cut sleeves to length for mounting flush with both surfaces.

a. Exception: Extend sleeves installed in floors of mechanical equipment areas or other wet areas 2 inches (50 mm) above finished floor level. Extend cast-iron sleeve fittings below floor slab as required to secure clamping ring if ring is specified.

2. Install sleeves in new walls and slabs as new walls and slabs are constructed.
3. Install sleeves that are large enough to provide 1/4-inch (6.4-mm) annular clear space between sleeve and pipe or pipe insulation. Use the following sleeve materials:

a. Steel Pipe Sleeves: For pipes smaller than NPS 6 (DN 150).
b. Stack Sleeve Fittings: For pipes penetrating floors with membrane waterproofing. Secure flashing between clamping flanges. Install section of cast-iron soil pipe to extend sleeve to 2 inches (50 mm) above finished floor level. Refer to Division 07 Section "Sheet Metal Flashing and Trim" for flashing.

1) Seal space outside of sleeve fittings with grout.

4. Except for underground wall penetrations, seal annular space between sleeve and pipe or pipe insulation, using joint sealants appropriate for size, depth, and location of joint. Refer to Division 07 Section "Joint Sealants" for materials and installation.

Q. Aboveground, Exterior-Wall Pipe Penetrations: Seal penetrations using sleeves and mechanical sleeve seals. Select sleeve size to allow for 1-inch (25-mm) annular clear space between pipe and sleeve for installing mechanical sleeve seals.

1. Install steel pipe for sleeves smaller than 6 inches (150 mm) in diameter.
2. Mechanical Sleeve Seal Installation: Select type and number of sealing elements required for pipe material and size. Position pipe in center of sleeve. Assemble mechanical sleeve seals and install in annular space between pipe and sleeve. Tighten bolts against pressure plates that cause sealing elements to expand and make watertight seal.

R. Underground, Exterior-Wall Pipe Penetrations: Install cast-iron "wall pipes" for sleeves. Seal pipe penetrations using mechanical sleeve seals. Select sleeve size to allow for 1-inch (25-mm) annular clear space between pipe and sleeve for installing mechanical sleeve seals.

1. Mechanical Sleeve Seal Installation: Select type and number of sealing elements required for pipe material and size. Position pipe in center of sleeve. Assemble mechanical sleeve seals and install in annular space between pipe and sleeve. Tighten bolts against pressure plates that cause sealing elements to expand and make watertight seal.

S. Fire-Barrier Penetrations: Maintain indicated fire rating of walls, partitions, ceilings, and floors at pipe penetrations. Seal pipe penetrations with firestop materials. Refer to Division 07 Section "Penetration Firestopping" for materials.

T. Verify final equipment locations for roughing-in.

U. Refer to equipment specifications in other Sections of these Specifications for roughing-in requirements.

3.4 PIPING JOINT CONSTRUCTION

A. Join pipe and fittings according to the following requirements and Division 23 Sections specifying piping systems.

B. Ream ends of pipes and tubes and remove burrs. Bevel plain ends of steel pipe.

C. Remove scale, slag, dirt, and debris from inside and outside of pipe and fittings before assembly.

D. Soldered Joints: Apply ASTM B 813, water-flushable flux, unless otherwise indicated, to tube end. Construct joints according to ASTM B 828 or CDA's "Copper Tube Handbook," using lead-free solder alloy complying with ASTM B 32.

E. Brazed Joints: Construct joints according to AWS's "Brazing Handbook," "Pipe and Tube" Chapter, using copper-phosphorus brazing filler metal complying with AWS A5.8.

F. Threaded Joints: Thread pipe with tapered pipe threads according to ASME B1.20.1. Cut threads full and clean using sharp dies. Ream threaded pipe ends to remove burrs and restore full ID. Join pipe fittings and valves as follows:

1. Apply appropriate tape or thread compound to external pipe threads unless dry seal threading is specified.
2. Damaged Threads: Do not use pipe or pipe fittings with threads that are corroded or damaged. Do not use pipe sections that have cracked or open welds.

G. Welded Joints: Construct joints according to AWS D10.12, using qualified processes and welding operators according to Part 1 "Quality Assurance" Article.

H. Flanged Joints: Select appropriate gasket material, size, type, and thickness for service application. Install gasket concentrically positioned. Use suitable lubricants on bolt threads.

I. Plastic Piping Solvent-Cement Joints: Clean and dry joining surfaces. Join pipe and fittings according to the following:

1. Comply with ASTM F 402 for safe-handling practice of cleaners, primers, and solvent cements.
2. CPVC Piping: Join according to ASTM D 2846/D 2846M Appendix.
3. PVC Pressure Piping: Join schedule number ASTM D 1785, PVC pipe and PVC socket fittings according to ASTM D 2672. Join other-than-schedule-number PVC pipe and socket fittings according to ASTM D 2855.
4. PVC Nonpressure Piping: Join according to ASTM D 2855.

J. Plastic Pressure Piping Gasketed Joints: Join according to ASTM D 3139.

K. Plastic Nonpressure Piping Gasketed Joints: Join according to ASTM D 3212.

L. PE Piping Heat-Fusion Joints: Clean and dry joining surfaces by wiping with clean cloth or paper towels. Join according to ASTM D 2657.

1. Plain-End Pipe and Fittings: Use butt fusion.
2. Plain-End Pipe and Socket Fittings: Use socket fusion.

M. Fiberglass Bonded Joints: Prepare pipe ends and fittings, apply adhesive, and join according to pipe manufacturer's written instructions.

3.5 PIPING CONNECTIONS

A. Make connections according to the following, unless otherwise indicated:

1. Install unions, in piping NPS 2 (DN 50) and smaller, adjacent to each valve and at final connection to each piece of equipment.
2. Install flanges, in piping NPS 2-1/2 (DN 65) and larger, adjacent to flanged valves and at final connection to each piece of equipment.
3. Wet Piping Systems: Install dielectric coupling and nipple fittings to connect piping materials of dissimilar metals.

3.6 EQUIPMENT INSTALLATION - COMMON REQUIREMENTS

A. Install equipment to allow maximum possible headroom unless specific mounting heights are not indicated.

B. Install equipment level and plumb, parallel and perpendicular to other building systems and components in exposed interior spaces, unless otherwise indicated.

C. Install HVAC equipment to facilitate service, maintenance, and repair or replacement of components. Connect equipment for ease of disconnecting, with minimum interference to other installations. Extend grease fittings to accessible locations.

D. Install equipment to allow right of way for piping installed at required slope.

3.7 PAINTING

A. Painting of HVAC systems, equipment, and components is specified in Division 09 Sections "Interior Painting" and "Exterior Painting."

B. Damage and Touchup: Repair marred and damaged factory-painted finishes with materials and procedures to match original factory finish.

3.8 CONCRETE BASES

A. Concrete Bases: Anchor equipment to concrete base according to equipment manufacturer's written instructions and according to seismic codes at Project.

1. Construct concrete bases of dimensions indicated, but not less than 4 inches (100 mm) larger in both directions than supported unit.
2. Install dowel rods to connect concrete base to concrete floor. Unless otherwise indicated, install dowel rods on 18-inch (450-mm) centers around the full perimeter of the base.
3. Install epoxy-coated anchor bolts for supported equipment that extend through concrete base, and anchor into structural concrete floor.
4. Place and secure anchorage devices. Use supported equipment manufacturer's setting drawings, templates, diagrams, instructions, and directions furnished with items to be embedded.
5. Install anchor bolts to elevations required for proper attachment to supported equipment.

6. Install anchor bolts according to anchor-bolt manufacturer's written instructions.
7. Use 3000-psi (20.7-MPa), 28-day compressive-strength concrete and reinforcement as specified in Division 03.

3.9 ERECTION OF METAL SUPPORTS AND ANCHORAGES

A. Refer to Division 05 Section "Metal Fabrications" for structural steel.

B. Cut, fit, and place miscellaneous metal supports accurately in location, alignment, and elevation to support and anchor HVAC materials and equipment.

C. Field Welding: Comply with AWS D1.1.

3.10 ERECTION OF WOOD SUPPORTS AND ANCHORAGES

A. Cut, fit, and place wood grounds, nailers, blocking, and anchorages to support, and anchor HVAC materials and equipment.

B. Select fastener sizes that will not penetrate members if opposite side will be exposed to view or will receive finish materials. Tighten connections between members. Install fasteners without splitting wood members.

C. Attach to substrates as required to support applied loads.

3.11 GROUTING

A. Mix and install grout for HVAC equipment base bearing surfaces, pump and other equipment base plates, and anchors.

B. Clean surfaces that will come into contact with grout.

C. Provide forms as required for placement of grout.

D. Avoid air entrapment during placement of grout.

E. Place grout, completely filling equipment bases.

F. Place grout on concrete bases and provide smooth bearing surface for equipment.

G. Place grout around anchors.

H. Cure placed grout.

END OF SECTION 230500

SECTION 230513 - COMMON MOTOR REQUIREMENTS FOR HVAC EQUIPMENT

PART 1 - GENERAL

1.1 RELATED DOCUMENTS

A. Drawings and general provisions of the Contract, including General and Supplementary Conditions and Division 01 Specification Sections, apply to this Section.

1.2 SUMMARY

A. Section includes general requirements for single-phase and polyphase, general-purpose, horizontal, small and medium, squirrel-cage induction motors for use on ac power systems up to 480 V and installed at equipment manufacturer's factory or shipped separately by equipment manufacturer for field installation.

1.3 COORDINATION

A. Coordinate features of motors, installed units, and accessory devices to be compatible with the following:

1. Motor controllers.
2. Torque, speed, and horsepower requirements of the load.
3. Ratings and characteristics of supply circuit and required control sequence.
4. Ambient and environmental conditions of installation location.

PART 2 - PRODUCTS

2.1 GENERAL MOTOR REQUIREMENTS

A. Comply with requirements in this Section except when stricter requirements are specified in HVAC equipment schedules or Sections.

B. Comply with NEMA MG 1 unless otherwise indicated.

C. Comply with IEEE 841 for severe-duty motors.

2.2 MOTOR CHARACTERISTICS

A. Duty: Continuous duty at ambient temperature of 100 deg F and at altitude of 1000 feet above sea level.

B. Capacity and Torque Characteristics: Sufficient to start, accelerate, and operate connected loads at designated speeds, at installed altitude and environment, with indicated operating sequence, and without exceeding nameplate ratings or considering service factor.

2.3 POLYPHASE MOTORS

A. Description: NEMA MG 1, Design B, medium induction motor.

B. Efficiency: Energy efficient, as defined in NEMA MG 1.

C. Service Factor: 1.15.

D. Multispeed Motors: Variable torque.

1. For motors with 2:1 speed ratio, consequent pole, single winding.
2. For motors with other than 2:1 speed ratio, separate winding for each speed.

E. Multispeed Motors: Separate winding for each speed.

F. Rotor: Random-wound, squirrel cage.

G. Bearings: Regreasable, shielded, antifriction ball bearings suitable for radial and thrust loading.

H. Temperature Rise: Match insulation rating.

I. Insulation: Class F.

J. Code Letter Designation:

1. Motors 15 HP and Larger: NEMA starting Code F or Code G.
2. Motors Smaller than 15 HP: Manufacturer's standard starting characteristic.

K. Enclosure Material: Cast iron for motor frame sizes 324T and larger; rolled steel for motor frame sizes smaller than 324T.

2.4 POLYPHASE MOTORS WITH ADDITIONAL REQUIREMENTS

A. Motors Used with Reduced-Voltage and Multispeed Controllers: Match wiring connection requirements for controller with required motor leads. Provide terminals in motor terminal box, suited to control method.

B. Motors Used with Variable Frequency Controllers: Ratings, characteristics, and features coordinated with and approved by controller manufacturer.

1. Windings: Copper magnet wire with moisture-resistant insulation varnish, designed and tested to resist transient spikes, high frequencies, and short time rise pulses produced by pulse-width modulated inverters.
2. Energy- and Premium-Efficient Motors: Class B temperature rise; Class F insulation.

3. Inverter-Duty Motors: Class F temperature rise; Class H insulation.
4. Thermal Protection: Comply with NEMA MG 1 requirements for thermally protected motors.

C. Severe-Duty Motors: Comply with IEEE 841, with 1.15 minimum service factor.

2.5 SINGLE-PHASE MOTORS

A. Motors larger than 1/20 hp shall be one of the following, to suit starting torque and requirements of specific motor application:

1. Permanent-split capacitor.
2. Split phase.
3. Capacitor start, inductor run.
4. Capacitor start, capacitor run.

B. Multispeed Motors: Variable-torque, permanent-split-capacitor type.

C. Bearings: Prelubricated, antifriction ball bearings or sleeve bearings suitable for radial and thrust loading.

D. Motors 1/20 HP and Smaller: Shaded-pole type.

E. Thermal Protection: Internal protection to automatically open power supply circuit to motor when winding temperature exceeds a safe value calibrated to temperature rating of motor insulation. Thermal-protection device shall automatically reset when motor temperature returns to normal range.

PART 3 - EXECUTION (Not Applicable)

END OF SECTION 230513

SECTION 230516 - EXPANSION FITTINGS AND LOOPS FOR HVAC PIPING

PART 1 - GENERAL

1.1 RELATED DOCUMENTS

A. Drawings and general provisions of the Contract, including General and Supplementary Conditions and Division 01 Specification Sections, apply to this Section.

1.2 SUMMARY

A. Section Includes:

1. Flexible pipe loop for seismic and thermal expansion.
2. Hanger kit assembly
3. Alignment guides and anchors.

1.3 PERFORMANCE REQUIREMENTS

A. Compatibility: Products shall be suitable for piping service fluids, materials, working pressures, and temperatures.

B. Capability: Products to absorb and compensate multiplane movements as well as reducing piping stress.

1.4 SUBMITTALS

A. Product Data: For each type of product indicated.

B. Delegated-Design Submittal: For each anchor and alignment guide indicated to comply with performance requirements and design criteria, including analysis data signed and sealed by the qualified professional engineer responsible for their preparation.

1. Design Calculations: Calculate requirements for thermal expansion of piping systems and for selecting and designing expansion joints, loops, and connections.
2. Design Calculations: Calculate requirements for seismic expansion of piping systems and for selecting and designing expansion joints, loops, and connections.
3. Anchor Details: Detail fabrication of each anchor indicated. Show dimensions and methods of assembly and attachment to building structure.
4. Alignment Guide Details: Detail field assembly and attachment to building structure.
5. Schedule: Indicate type, manufacturer's number, size, material, pressure rating, end connections, and location for each expansion joint.
6. Scaled drawings, elevations and sections showing actual space/location and physical dimensions and clearances.

C. Welding Certificates.

D. Product Certificates: For each type of expansion joint, from manufacturer.

E. Maintenance Data: For expansion joints to include in maintenance manuals.

1.5 QUALITY ASSURANCE

A. Welding Qualifications: Qualify procedures and personnel according to the following:

1. AWS D1.1/D1.1M, "Structural Welding Code - Steel."
2. ASME Boiler and Pressure Vessel Code: Section IX.

PART 2 - PRODUCTS

2.1 FLEXIBLE PIPE LOOP

A. Manufacturer::
1. Manufacturers: Subject to compliance with requirements, provide products by one of the following**:**
a. Flex-Hose Co., Inc.
b. Equivalent Manufacturer, subject to approval.
1) The equivalent manufacturer shall provide to the mechanical contractor a complete equipment data package. This package shall include, but is not limited to, design calculations at the design conditions, installation requirements, scaled drawings, elevations and sections showing actual space/location and physical dimensions and clearances.

2.2 Tri Flex Loop
2. Construction to be 3 equal length sections of annular corrugated stainless steel (or bronze) close-pitch hose (made in USA) with stainless steel (or bronze) overbraid (made in USA) that will absorb or compensate for pipe movements in all 6 degrees of freedom (3 coordinate axes, plus rotation about those axes) simultaneously.
3. The corrugated metal hose, braid(s), and a stainless steel ring-ferrule/band (material gauge not less than .048") must be integrally seal-welded using a 100% circumferential, full penetration TIG welds. End fittings shall be selected per application. Fittings must be attached using a 100% circumferential TIG weld.
4. When service is flammable liquids or gases and ID size is 1" - 4" pre-manufactured flexible loops shall have UL536 listing for flammable and combustible gases and liquids at pressures not exceeding 175 PSI at ambient temperature.
5. Braided stainless steel Tri-Flex Loops must be suitable for operating temperatures up to 850 degrees F (455 degrees C). Braided bronze Tri-Flex Loops must be suitable for operating temperatures up to 400 degrees F (204 degrees C)
6. Tri-Flex Loop must be designed for pressure testing to 1.5 times their maximum rated working pressure and a minimum 4:1 (burst to working) safety factor.
7. Each braided Tri-Flex Loop shall be individually leak tested by the manufacturer using air-under-water or hydrostatic pressure.

8. Tri-Flex Loops shall be prepared for shipment using a cut-to-length metal shipping bar, tacked securely between the elbows of the two parallel legs, to maintain the manufactured length during shipping. Shipping bar must be removed prior to system start-up.
9. The Tri-Flex hanger assembly kit shall be used to support and hang the Tri-Flex Loop. The UL Listed Seismic Wire/Cable assemblies conform to the requirements of the ASCE (American Society of Civil Engineers) guidelines for structural applications of wire rope, in that the cable is pre-stretched and the permanent end fittings maintain the break strength of the cable with a safety factor of two.
10. The pre-manufactured flexible loop shall be installed and guided following the manufacturer's printed installation instructions. Other manufactured loops that require pipe alignment guides shall use "Spider" type with outer housing ring. Units shall be fabricated from carbon steel. Pipe hangers and/or roller supports shall not be considered acceptable for use as guides.

B. Hanger Assembly Kit:
1. UL Listed Seismic Wire Rope/Cable™ as provided in Flex-Hose Co. Hanger Assembly Kit is to be utilized for installation of all Tri-Flex Loops®. The Wire Rope/Cable shall conform to the requirements of the ACSE (American Society of Civil Engineers) guidelines for structured applications of wire rope, in that the cable is pre-stretched and the permanent end fittings maintain the break strength of the cable with a safety factor of two. The cable(s) shall be color coded throughout its full length. For installation of Tri-Flex Loops through 8” inside diameter the red color coded cable kit is to be utilized. Installation of 10” and 12” inside diameters shall be with the blue color coded kit.
2. Installation is to be performed in accordance with instructions enclosed with each individual kit. One kit is required per Tri-Flex Loop.

C. Pipe Alignment Guide:
1. Steel Pipe: The guide(s) must allow movement along the pipe axis while restricting lateral pipe movement, thereby facilitating proper operation of the expansion control device. The pipe alignment guide spider, housing, and base must be constructed of carbon steel (painted for rust protection). The guide design, which allows easy assembly, must provide a bolted split-spider clamp/slide and a bolted split-housing with integral base for anchoring the guide by bolting or welding (guides to be shipped unassembled for fast field installation).
2. Copper Pipe: The alignment guide spider, housing, and base must be constructed of carbon steel (painted for rust protection) and shall require the addition of dielectric lead spacers when used with copper tubing.

    a. Standards: ASME Boiler and Pressure Vessel Code: Section II, "Materials"; and ASME B31.9, "Building Services Piping," for materials and design of pressure-containing parts and bolting.
    b. Material: Carbon-steel assembly with asbestos-free composition packing.
    c. Design: For 360-degree rotation and angular deflection.
    d. Minimum Pressure Rating: 250 psig at 400 deg F (1725 kPa at 204 deg C.
    e. End Connections for NPS 2 (DN 50) and Smaller: Threaded.

2.3 EQUIVALENT MANUFACTURER

D. The equivalent manufacturer shall provide to the mechanical contractor a complete equipment data package. This package shall include, but is not limited to, design calculations at the design conditions, installation requirements, scaled drawings, elevations and sections showing actual space/location and physical dimensions and clearances highlighting system will fit the available space.

2.4 ALIGNMENT GUIDES AND ANCHORS

E. Alignment Guides:

1. Manufacturers: Subject to compliance with requirements, provide products or comparable product by one of the following**:**
    a. Advanced Thermal Systems, Inc.
    b. Hyspan Precision Products, Inc.
    c. Metraflex, Inc.
    d. Flexicraft Industries.
    e. Flex-Weld, Inc.

2. Description: Steel, factory-fabricated alignment guide, with bolted two-section outer cylinder and base for attaching to structure; with two-section guiding spider for bolting to pipe.

F. Anchor Materials:

1. Steel Shapes and Plates: ASTM A 36/A 36M.
2. Bolts and Nuts: ASME B18.10 or ASTM A 183, steel hex head.
3. Washers: ASTM F 844, steel, plain, flat washers.
4. Mechanical Fasteners: Insert-wedge-type stud with expansion plug anchor for use in hardened portland cement concrete, with tension and shear capacities appropriate for application.

    a. Stud: Threaded, zinc-coated carbon steel.
    b. Expansion Plug: Zinc-coated steel.
    c. Washer and Nut: Zinc-coated steel.

5. Chemical Fasteners: Insert-type-stud, bonding-system anchor for use with hardened portland cement concrete, with tension and shear capacities appropriate for application.

    a. Bonding Material: ASTM C 881/C 881M, Type IV, Grade 3, two-component epoxy resin suitable for surface temperature of hardened concrete where fastener is to be installed.
    b. Stud: ASTM A 307, zinc-coated carbon steel with continuous thread on stud unless otherwise indicated.
    c. Washer and Nut: Zinc-coated steel.

PART 3 - EXECUTION

3.1 EXPANSION-JOINT INSTALLATION

A. Install expansion loops of sizes matching sizes of piping in which they are installed.

B. Support all pipelines are supported to ensure that loops do not carry the pipe load.

C. Initial pipe misalignment must not exceed 1/8” in any direction.

D. Install the loop in accordance with the manufacturer’s requirements. If anchors are designed into the piping system they need only be sized to accommodate the forces of the piping system.

E. Verify that the movements of the system are within the design parameters of the loop being installed.

F. Check system pressure and temperature and do not exceed recommended performance limits. Operation beyond design limits will result in premature failure.

G. In “nested” loop applications, tag individual loops to designate its location. This should be compared against the submittal drawing to ensure each loop is properly placed.

H. When installed in any configuration other than with the hanging down (vertical), the weight of the loop must be supported utilizing the support lug provided at two of the 90° elbows. A chain, cable, or other suitable means of support must be used to support the weight of the loop and the media being conveyed. Care should be used not to allow the chain, cable, or other support to come in contact with the braided hose sections of the loop.

3.2 ALIGNMENT-GUIDE AND ANCHOR INSTALLATION

A. Install alignment guides to guide expansion and to avoid end-loading and torsional stress.

B. Install two guides on each side of pipe expansion fittings and loops. Install guides nearest to expansion joint not more than four pipe diameters from expansion joint.

C. Attach guides to pipe and secure guides to building structure.

D. Install anchors at locations to prevent stresses from exceeding those permitted by ASME B31.9 and to prevent transfer of loading and stresses to connected equipment.

E. Anchor Attachments:

1. Anchor Attachment to Steel Pipe: Attach by welding. Comply with ASME B31.9 and ASME Boiler and Pressure Vessel Code: Section IX, "Welding and Brazing Qualifications."
2. Anchor Attachment to Copper Tubing: Attach with pipe hangers. Use MSS SP-69, Type 24, U-bolts bolted to anchor.

F. Fabricate and install steel anchors by welding steel shapes, plates, and bars. Comply with ASME B31.9 and AWS D1.1/D1.1M.

1. Anchor Attachment to Steel Structural Members: Attach by welding.
2. Anchor Attachment to Concrete Structural Members: Attach by fasteners. Follow fastener manufacturer's written instructions.

G. Use grout to form flat bearing surfaces for guides and anchors attached to concrete.

END OF SECTION 230516

SECTION 230519 - METERS AND GAGES FOR HVAC PIPING

PART 1 - GENERAL

1.1 RELATED DOCUMENTS

A. Drawings and general provisions of the Contract, including General and Supplementary Conditions and Division 01 Specification Sections, apply to this Section.

1.2 SUMMARY

A. Section Includes:

1. Bimetallic-actuated thermometers.
2. Filled-system thermometers.
3. Liquid-in-glass thermometers.
4. Thermowells.
5. Dial-type pressure gages.
6. Gage attachments.
7. Test plugs.
8. Test-plug kits.
9. Sight flow indicators.
10. Insertion Electromagnetic Flowmeters

B. Related Sections:

1. Division 23 Section "Facility Natural-Gas Piping" for gas meters.

1.3 SUBMITTALS

A. Product Data: For each type of product indicated.

B. Wiring Diagrams: For power, signal, and control wiring.

C. Product Certificates: For each type of meter and gage, from manufacturer.

D. Operation and Maintenance Data: For meters and gages to include in operation and maintenance manuals.

PART 2 - PRODUCTS

2.1 BIMETALLIC-ACTUATED THERMOMETERS

A. Manufacturers: Subject to compliance with requirements, provide products by one of the following:

1. Ashcroft Inc.
2. Palmer Wahl Instrumentation Group.
3. Trerice, H. O. Co.
4. Ernst Flow Industries.
5. Miljoco Corporation.

B. Standard: ASME B40.200.

C. Case: Liquid-filled and sealed type; stainless steel with 3-inch nominal diameter.

D. Dial: Nonreflective aluminum with permanently etched scale markings and scales in deg F .

E. Connector Types: Union joint, adjustable angle, with unified-inch screw threads.

F. Connector Size: 1/2 inch, with ASME B1.1 screw threads.

G. Stem: 0.25 or 0.375 inch in diameter; stainless steel.

H. Window: Plain glass.

I. Ring: Stainless steel.

J. Element: Bimetal coil.

K. Pointer: Dark-colored metal.

L. Accuracy: Plus or minus 1.5 percent of scale range.

2.2 FILLED-SYSTEM THERMOMETERS

A. Direct-Mounted, Metal-Case, Vapor-Actuated Thermometers:
1. Manufacturers: Subject to compliance with requirements, provide products by one of the following:

   a. Ashcroft Inc.
   b. Palmer Wahl Instrumentation Group.
   c. Trerice, H. O. Co.
   d. Miljoco Corporation.
   e. Weiss Instruments, Inc.

2. Standard: ASME B40.200.
3. Case: Sealed type, cast aluminum or 5-inch nominal diameter.
4. Element: Bourdon tube.
5. Movement: Mechanical,dampening type, with link to pressure element and connection to pointer.
6. Dial: Nonreflective aluminum with permanently etched scale markings graduated in deg F.
7. Pointer: Dark-colored metal.
8. Window: Glass.
9. Ring : Stainless steel.

10. Connector Types: Union joint, adjustable, 180 degrees in vertical plane, 360 degrees in horizontal plane, with locking device with ASME B1.1 screw threads.
11. Thermal System: Liquid-filled bulb in copper-plated steel, aluminum, or brass stem and of length to suit installation.

    a. Design for Air-Duct Installation: With ventilated shroud.
    b. Design for Thermowell Installation: Bare stem.

12. Accuracy: Plus or minus 1.5 percent of scale range.

B. Remote-Mounted, Metal-Case, Vapor-Actuated Thermometers:
1. Manufacturers: Subject to compliance with requirements, provide products by one of the following:
    a. Trerice, H. O. Co.
    b. Miljoco Corporation.
    c. Weiss Instruments, Inc
    d. Ashcroft Inc.

2. Standard: ASME B40.200.
3. Case: Sealed type, cast aluminum 5-inch nominal diameter with back flange and holes for panel mounting.
4. Element: Bourdon tube or other type of pressure element.
5. Movement: Mechanical, with link to pressure element and connection to pointer.
6. Dial: Nonreflective aluminum with permanently etched scale markings graduated in deg F.
7. Pointer: Dark-colored metal.
8. Window: Glass.
9. Ring: Stainless steel.
10. Connector Types: Union joint, bottom; with ASME B1.1 screw threads.
11. Thermal System: Liquid-filled bulb in copper-plated steel, aluminum, or brass stem and of length to suit installation.

    a. Design for Air-Duct Installation: With ventilated shroud.
    b. Design for Thermowell Installation: Bare stem.

12. Accuracy: Plus or minus 1.5 percent of scale range.

2.3 LIQUID-IN-GLASS THERMOMETERS

A. Metal-Case, Compact-Style, Liquid-in-Glass Thermometers:
1. Manufacturers: Subject to compliance with requirements, provide products by one of the following:

    a. Trerice, H. O. Co.
    b. Dresser Industries, Inc.; Instrument Div.; Weksler Instruments Operating Unit
    c. Ernst Gage Co.

2. Standard: ASME B40.200.

3. Case: Cast aluminum; 6-inch nominal size.
4. Case Form: Straight unless otherwise indicated.
5. Tube: Glass with magnifying lens and blue organic liquid.
6. Tube Background: Nonreflective aluminum with permanently etched scale markings graduated in deg F.
7. Window: Glass.
8. Stem: Brass and of length to suit installation.

    a. Design for Air-Duct Installation: With ventilated shroud.
    b. Design for Thermowell Installation: Bare stem.

9. Connector: 3/4 inch, with ASME B1.1 screw threads.
10. Accuracy: Plus or minus 1 percent of scale range or one scale division, to a maximum of 1.5 percent of scale range.

B. Metal-Case, Industrial-Style, Liquid-in-Glass Thermometers:
1. Manufacturers: Subject to compliance with requirements, provide products by one of the following:

    a. Flo Fab Inc.
    b. Palmer Wahl Instrumentation Group.
    c. Trerice, H. O. Co.
    d. Miljoco Corporation.
    e. Weiss Instruments, Inc

2. Standard: ASME B40.200.
3. Case: Cast aluminum; 9-inch nominal size unless otherwise indicated.
4. Case Form: Adjustable angle unless otherwise indicated.
5. Tube: Glass with magnifying lens and blue organic liquid.
6. Tube Background: Nonreflective aluminum with permanently etched scale markings graduated in deg F.
7. Window: Glass.
8. Stem: Brass and of length to suit installation.

    a. Design for Air-Duct Installation: With ventilated shroud.
    b. Design for Thermowell Installation: Bare stem.

9. Connector: 1-1/4 inches, with ASME B1.1 screw threads.
10. Accuracy: Plus or minus 1 percent of scale range or one scale division, to a maximum of 1.5 percent of scale range.

2.4 DUCT-THERMOMETER MOUNTING BRACKETS

A. Description: Flanged bracket with screw holes, for attachment to air duct and made to hold thermometer stem.

2.5 THERMOWELLS

A. Thermowells:

1. Standard: ASME B40.200.
2. Description: Pressure-tight, socket-type fitting made for insertion into piping tee fitting.
3. Material for Use with Copper Tubing: Stainless Steel.
4. Material for Use with Steel Piping: Stainless steel.
5. Type: Stepped shank unless straight or tapered shank is indicated.
6. External Threads: NPS 1/2, NPS 3/4, or NPS 1, ASME B1.20.1 pipe threads.
7. Internal Threads: 1/2, 3/4, and 1 inch, with ASME B1.1 screw threads.
8. Bore: Diameter required to match thermometer bulb or stem.
9. Insertion Length: Length required to match thermometer bulb or stem.
10. Lagging Extension: Include on thermowells for insulated piping and tubing.
11. Bushings: For converting size of thermowell's internal screw thread to size of thermometer connection.

2.6 PRESSURE GAGES

A. Direct-Mounted, Metal-Case, Dial-Type Pressure Gages:
1. Manufacturers: Subject to compliance with requirements, provide products by one of the following:
   a. Trerice, H. O. Co.
   b. Ashcroft, Inc
   c. Ernst Flow Industries
   d. Palmer Wahl Instrumentation Group.

2. Standard: ASME B40.100.
3. Case: Liquid-filled cast aluminum ; 4-1/2-inch
4. Pressure-Element Assembly: Bourdon tube unless otherwise indicated.
5. Pressure Connection: Brass, with NPS 1/4, ASME B1.20.1 pipe threads and bottom-outlet type unless back-outlet type is indicated.
6. Movement: Mechanical, with link to pressure element and connection to pointer.
7. Dial: Nonreflective aluminum with permanently etched scale markings graduated in psi.
8. Pointer: Dark-colored metal.
9. Window: Glass.
10. Ring: Stainless steel.
11. Accuracy: Grade A, plus or minus 1 percent of middle half of scale range.

B. Remote-Mounted, Metal-Case, Dial-Type Pressure Gages:
1. Manufacturers: Subject to compliance with requirements, provide products or comparable product by one of the following:

   a. AMETEK, Inc.; U.S. Gauge.
   b. Palmer Wahl Instrumentation Group.
   c. Trerice, H. O. Co.
   d. Ashcroft, Inc
   e. Ernst Flow Industries

2. Standard: ASME B40.100.
3. Case: Liquid-filled type; cast aluminum ; 4-1/2-inch nominal diameter with back flange and holes for panel mounting.
4. Pressure-Element Assembly: Bourdon tube unless otherwise indicated.

5. Pressure Connection: Brass, with NPS 1/4 (DN 8), ASME B1.20.1 pipe threads and bottom-outlet type unless back-outlet type is indicated.
6. Movement: Mechanical, with link to pressure element and connection to pointer.
7. Dial: Nonreflective aluminum with permanently etched scale markings graduated in psi.
8. Pointer: Dark-colored metal.
9. Window: Glass.
10. Ring: Stainless steel.
11. Accuracy: Grade A, plus or minus 1 percent of middle half of scale range.

2.7 GAGE ATTACHMENTS

A. Snubbers: ASME B40.100, brass; with NPS 1/4, ASME B1.20.1 pipe threads and porous-metal-type surge-dampening device. Include extension for use on insulated piping.

B. Siphons: Loop-shaped section of brass pipe with NPS 1/4 pipe threads.

C. Valves: Brass ball with NPS 1/4, ASME B1.20.1 pipe threads.

2.8 TEST PLUGS

A. Manufacturers: Subject to compliance with requirements, provide products by one of the following:
1. Flow Design, Inc.
2. Miljoco Corporation.
3. Trerice, H. O. Co.
4. Peterson Equipment Co., Inc.
5. Weiss Instruments, Inc.

B. Description: Test-station fitting made for insertion into piping tee fitting.

C. Body: Brass or stainless steel with core inserts and gasketed and threaded cap. Include extended stem on units to be installed in insulated piping.

D. Thread Size: NPS 1/4, ASME B1.20.1 pipe thread.

E. Minimum Pressure and Temperature Rating: 500 psig at 200 deg F.

F. Core Inserts: EPDM self-sealing rubber.

2.9 TEST-PLUG KITS

A. Manufacturers: Subject to compliance with requirements, provide products by one of the following:
1. Flow Design, Inc.
2. Miljoco Corporation.
3. Trerice, H. O. Co.
4. Peterson Equipment Co., Inc.
5. Weiss Instruments, Inc.

B. Furnish one test-plug kit containing two thermometers, one pressure gage and adapter, and carrying case. Thermometer sensing elements, pressure gage, and adapter probes shall be of diameter to fit test plugs and of length to project into piping.

C. High-Range Thermometer: Small, bimetallic insertion type with 1- to 2-inch- diameter dial and tapered-end sensing element. Dial range shall be at least 0 to 220 deg F.

D. Pressure Gage: Small, Bourdon-tube insertion type with 2- to 3-inch- diameter dial and probe. Dial range shall be at least 0 to 200 psig.

E. Carrying Case: Metal or plastic, with formed instrument padding.

2.10 SIGHT FLOW INDICATORS

A. Manufacturers: Subject to compliance with requirements, provide products or comparable product by one of the following:
1. Archon Industries, Inc.
2. Dwyer Instruments, Inc.
3. Emerson Process Management; Brooks Instrument.
4. Ernst Flow Industries
5. KOBOLD Instruments, Inc. - USA; KOBOLD Messring GmbH

B. Description: Piping inline-installation device for visual verification of flow.

C. Construction: Bronze with sight glass and ball, flapper, or paddle wheel indicator, and threaded or flanged ends.

D. Minimum Pressure Rating: 150 psig.

E. Minimum Temperature Rating: 200 deg F.

F. End Connections for NPS 2 and Smaller: Threaded.

G. End Connections for NPS 2-1/2 and Larger: Flanged.

2.11 INSTALLATION

A. Install thermowells with socket extending one-third of pipe diameter and in vertical position in piping tees.

B. Install thermowells of sizes required to match thermometer connectors. Include bushings if required to match sizes.

C. Install thermowells with extension on insulated piping.

D. Fill thermowells with heat-transfer medium.

E. Install direct-mounted thermometers in thermowells and adjust vertical and tilted positions.

F. Install remote-mounted thermometer bulbs in thermowells and install cases on panels; connect cases with tubing and support tubing to prevent kinks. Use minimum tubing length.

G. Install duct-thermometer mounting brackets in walls of ducts. Attach to duct with screws.

H. Install direct-mounted pressure gages in piping tees with pressure gage located on pipe at the most readable position.

I. Install remote-mounted pressure gages on panel.

J. Install valve and snubber in piping for each pressure gage for fluids.

K. Install test plugs in piping tees.

L. Install flow indicators in piping systems in accessible positions for easy viewing.

M. Assemble and install connections, tubing, and accessories between flow-measuring elements and flowmeters according to manufacturer's written instructions.

N. Install permanent indicators on walls or brackets in accessible and readable positions.

O. Install connection fittings in accessible locations for attachment to portable indicators.

P. Install thermometers in the following locations:

1. Inlet and outlet of each hydronic zone.
2. Inlet and outlet of each hydronic coil in air-handling units.
3. Inlet and outlet of each boiler and on main supply and return piping.
4. Inlet and outlet of each thermal-storage tank.
5. Outside-, return-, supply-, and mixed-air ducts.

Q. Install pressure gages in the following locations:

1. Discharge of each pressure-reducing valve.
2. Inlet and outlet of each hot water connection.
3. Suction and discharge of each pump.

2.12 CONNECTIONS

A. Install meters and gages adjacent to machines and equipment to allow service and maintenance of meters, gages, machines, and equipment.

2.13 ADJUSTING

A. After installation, calibrate meters according to manufacturer's written instructions.

B. Adjust faces of meters and gages to proper angle for best visibility.

2.14 THERMOMETER SCHEDULE

A. Thermometers at inlet and outlet of each hydronic zone shall be one of the following:

1. Liquid-filled and sealed bimetallic-actuated type.
2. Direct-or mounted, metal-case, vapor-actuated type.
3. Compact or Industrial-style, liquid-in-glass type.
4. Test plug with chlorosulfonated polyethylene synthetic self-sealing rubber inserts.

B. Thermometers at inlet and outlet of each hydronic boiler shall be one of the following:

1. Liquid-filled and sealed bimetallic-actuated type.
2. Direct-or mounted, metal-case, vapor-actuated type.
3. Compact or Industrial-style, liquid-in-glass type.
4. Test plug with chlorosulfonated polyethylene synthetic self-sealing rubber inserts.

C. Thermometers at inlet and outlet of each hydronic coil in air-handling units and built-up central systems shall be one of the following:

1. Liquid-filled and sealed bimetallic-actuated type.
2. Direct-or mounted, metal-case, vapor-actuated type.
3. Compact or Industrial-style, liquid-in-glass type.
4. Test plug with chlorosulfonated polyethylene synthetic self-sealing rubber inserts.

D. Thermometers at inlet and outlet of each thermal-storage tank shall be one of the following:

1. Liquid-filled and sealed bimetallic-actuated type.
2. Direct-or mounted, metal-case, vapor-actuated type.
3. Compact or Industrial-style, liquid-in-glass type.
4. Test plug with chlorosulfonated polyethylene synthetic self-sealing rubber inserts.

E. Thermometers at outside-, return-, supply-, and mixed-air ducts shall be one of the following:

1. Liquid-filled and sealed bimetallic-actuated type.
2. Direct-or mounted, metal-case, vapor-actuated type.
3. Compact or Industrial-style, liquid-in-glass type.

F. Thermometer stems shall be of length to match thermowell insertion length.

2.15 THERMOMETER SCALE-RANGE SCHEDULE

A. Scale Range for Heating, Hot-Water Piping: 20 to 240 deg F.

B. Scale Range for Air Ducts: 0 to 150 deg F .

2.16 PRESSURE-GAGE SCHEDULE

A. Pressure gages at discharge of each pressure-reducing valve shall be one of the following:

1. Sealed direct-mounted, metal case.
2. Test plug with EPDM self-sealing rubber inserts.

B. Pressure gages at suction and discharge of each pump shall be one of the following:

1. Sealed direct mounted, metal case.
2. Test plug with EPDM self-sealing rubber inserts.

2.17 PRESSURE-GAGE SCALE-RANGE SCHEDULE

A. Scale Range for hot waterheating Piping: 0 to 160 psi.

END OF SECTION 230519