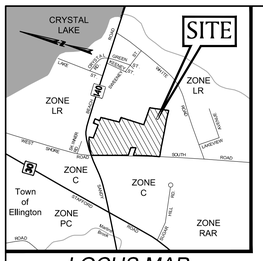

LOCUS MAP

SCALE: 1" = 1000'

LEGEND:

- REBAR/PIPE
- PROPERTY CORNER (CALCULATED)
- SURVEY CONTROL POINT
- SEWER MANHOLE
- DRAIN MANHOLE
- WATER MANHOLE
- ELECTRIC MANHOLE
- TELEPHONE MANHOLE
- CATCH BASIN
- HYDRANT
- WATER GATE
- GAS GATE
- UNKNOWN GATE
- MONITORING WELL
- WELL
- ROOF LEADER
- WOOD POST
- METAL BOLLARD
- UTILITY POLE
- GUY ANCHOR
- LIGHT POLE
- ELECTRIC HANDHOLE
- HANDHOLE
- SIGN
- DOUBLE POST SIGN
- DECIDUOUS TREE
- CONIFEROUS TREE
- TREE STUMP
- SHRUB
- CONC. CONCRETE
- BIT. BITUMINOUS CONCRETE
- (R) RECORD INFORMATION
- REGULATED ACTIVITY SETBACK LINE
- DELINEATED WETLAND BOUNDARY
- WETLAND FLAG
- WETLAND SYMBOL
- INV. = 645.57 PIPE INVERT ELEVATION
- 650 MAJOR CONTOUR
- 652 MINOR CONTOUR
- 672.89 SPOT ELEVATION
- PROPERTY LINE
- ABUTTING PROPERTY LINE
- LOT LINE
- BRUSHLINE
- TREELINE
- EDGE OF GRAVEL/DIRT
- EDGE OF GRASS
- POST & RAIL FENCE
- CHAIN LINK FENCE
- ELECTRIC LINE
- SANITARY/SEPTIC LINE
- WATER LINE
- OVERHEAD WIRES

SURVEYOR'S NOTES:

1. THIS SURVEY AND MAP HAVE BEEN PREPARED PURSUANT TO THE REGULATIONS OF CONNECTICUT STATE AGENCIES SECTIONS 20–300B–1 THROUGH 20–300B–20 AND THE "STANDARDS FOR SURVEYS AND MAPS IN THE STATE OF CONNECTICUT" AS ADOPTED BY THE CONNECTICUT ASSOCIATION OF LAND SURVEYORS, INC. ON SEPTEMBER 26, 1996.
   TYPE OF SURVEY: LIMITED PROPERTY SURVEY
   BOUNDARY DETERMINATION CATEGORY: DEPENDENT RESURVEY
   CLASS OF HORIZONTAL ACCURACY: A2
   CLASS OF TOPOGRAPHIC ACCURACY: T2
   THE INTENT OF THIS SURVEY AND MAP: TO SUPPORT DESIGN OF SITE IMPROVEMENTS.
2. REFERENCE HAS BEEN MADE TO THE FOLLOWING MAPS AND PLANS:
   A. "BOUNDARY PLAN – A.P.N. 129–036–0000, PERMIT PLAN, PREPARED FOR DAVID J. & KIM F. FLANNERY, #256 SANDY BEACH ROAD, ELLINGTON, CONNECTICUT, DATE: 08–10–02, SCALE: 1" = 40', SHEET NO: 1 OF 2, REVISION: 08–28–03, TARBELL, HEINTZ & ASSOCIATES., INC., RUSSELL H. HEINTZ, L.S. 15464", ON FILE WITH THE TOWN OF ELLINGTON LAND RECORDS AS MAP H–728.
   B. "MAP OF PROPERTY OF GEORGE W. & MARGARET S. BIONNELL, ELLINGTON, CONNECTICUT, ELLINGTON, CONNECTICUT, SCALE 1" = 40', DATE 6/30/90, SCHINDLER SURVEYS, ALFRED E. SCHINDLER, L.S. 5731", RE–CERTIFIED 5/16/11 BY RACHEL L. DEARBORN, L.S. 70295, ON FILE WITH THE TOWN OF ELLINGTON LAND RECORDS AS MAP H–1073.
   C. "MAP SHOWING PROPERTY OF AND LAND TO BE ACQUIRED BY THE TOWN OF ELLINGTON AT CRYSTAL LAKE SCHOOL, ELLINGTON, CONNECTICUT, SCALE 1" = 40', DATE 7/07/95, REVISIONS 1/02/96, SCHINDLER SURVEYS, ALFRED E. SCHINDLER, L.S. 5731", ON FILE WITH THE TOWN OF ELLINGTON LAND RECORDS AS MAP H–280.
   D. "PLAN PREPARED FOR JAMES SIMMONS, SAND BEACH ROAD (A.K.A. CONN. ROUTE 140), ELLINGTON, CT, BOUNDARY PLAN, SCALE: 1" = 40', DATE: 8/28/86, SHEET 1 OF 1, HOLMES & HENRY ASSOCIATES, PETER R. HENRY, L.L.S. 13636", ON FILE WITH THE TOWN OF ELLINGTON LAND RECORDS AS MAP 799.
   E. "SUBDIVISION PLAN, LAND OF B.G. MEYERS ENTERPRISES, WHITE ROAD, ELLINGTON, CONN., DATE: 8–31–72, SCALE: 1" = 50', A.R. LOMBARDI & ASSOCIATES INC., A. RICHARD LOMBARDI, P.E. 5447", ON FILE WITH THE TOWN OF ELLINGTON LAND RECORDS AS MAP 496.
   F. "MAP OF PROPERTY OF EDWIN MILLER, ELLINGTON, CONN., SCALE: 1" = 50', DEC. 28, 1971, ALFRED E. SCHINDLER, L.S. 5731", ON FILE WITH THE TOWN OF ELLINGTON LAND RECORDS AS MAP 639.
   G. "PROPERTY OF COMMUNITY METHODIST CHURCH, CRYSTAL LAKE, ELLINGTON, CONN., SCALE: 1" = 30', ROBERT H. CHAMBERS, C.E.", ON FILE WITH THE TOWN OF ELLINGTON LAND RECORDS AS MAP 63A.
   H. "TOWN OF ELLINGTON, CONN., CRYSTAL LAKE, SANITARY SEWER SYSTEM , CONTRACT NO. 2, SANDY BEACH RD. STA. 7+35 TO 14+02, DATE 3/87, SCALE AS NOTED, SHEET NO. 7 OF 20, CONSULTING ENVIRONMENTAL ENGINEERS, INC.", PROVIDED TO THE BSC GROUP BY THE TOWN OF ELLINGTON DEPARTMENT OF PUBLIC WORKS.
   I. "CRYSTAL LAKE SCHOOL, SANDY BEACH ROAD CT RTE 140, ELLINGTON, CONNECTICUT, SCALE 1"=20', DATE 5/7/07, DRAWING NO. 1 "OVERALL SITE PLAN", DRAWING NO. 2 "DETAIL WATER SYSTEM SITE PLAN", DRAWING NO. 6 "OPTIONAL FIRE PROTECTION ALTERNATIVES, BUCK & BUCK, LLC", PROVIDED TO THE BSC GROUP BY THE TOWN OF ELLINGTON DEPARTMENT OF PUBLIC WORKS.
3. THE FIELD SURVEY WAS PERFORMED ON THE GROUND WITH AN EDM TOTAL STATION BY THE BSC GROUP IN OCTOBER AND NOVEMBER OF 2012. THE CONTOUR INTERVAL SHOWN IS 2–FOOT. THE WETLANDS SHOWN ON THIS MAP WERE DELINEATED IN THE FIELD ON NOVEMBER 9, 2012 BY MARTIN BROGIE, REGISTERED SOIL SCIENTIST. THE WETLANDS WERE LOCATED IN THE FIELD BY THE BSC GROUP ON NOVEMBER 15, 2012.
4. THE REFERENCE MERIDIAN (NORTH ARROW) SHOWN IS BASED UPON THE NORTH AMERICAN DATUM OF 1983 (NAD 83) AS DETERMINED FROM THE GLOBAL POSITIONING SYSTEMS (GPS), AND CONSISTENT WITH MAP REFERENCE #2B. THE VERTICAL DATUM UTILIZED IS BASED UPON THE NATIONAL GEODETIC VERTICAL DATUM OF 1929 (NGVD 29) AS DETERMINED FROM GPS, CONVERTED USING NATIONAL GEODETIC SURVEY (NGS) SOFTWARE–CORPSCON 6.0, AND VERIFIED USING THE BENCHMARKS DEPICTED IN MAP REFERENCES 2B AND 2H. VERTICAL DATUM CHOSEN TO BE CONSISTENT WITH MAP REFERENCE #2H.
5. BOUNDARY LINE AS SHOWN PER MAP REFERENCE 2B AND 2C. THE PRESENT CONFIGURATION OF THE SUBJECT PARCEL'S PROPERTY LINES ABUTTING THE PARCEL IDENTIFIED BY TAX MAP 128/LOT 021 INDICATE ENCROACHMENT OF SAID PARCEL ONTO LAND OF THE SUBJECT PARCEL. FIELD EVIDENCE (STONE WALL REMAINS, FENCE POSTS WITH WIRE REMAINS) SUPPORTS MAP REFERENCE 2B AND 2C. IT IS ALSO NOTED THAT THE TOWN ASSESSOR'S TAX MAPS AND TOWN G.I.S MAPS DEPICT A DIFFERENT CONFIGURATION OF THE PARCEL IDENTIFIED BY TAX MAP 128/LOT 021. SUCH A CONFIGURATION MAY DIRECTLY AFFECT THE SEVERITY OF MANY OF THE APPARENT ENCROACHMENTS (GARAGE, GRAVEL PARKING AREA, POOL AND DECK). THE PREVIOUS TWO STATEMENTS ARE FOR INFORMATIONAL PURPOSES ONLY.
6. BOUNDARY MARKERS SHOWN AS LOCATED IN THE FIELD REPRESENT POSSIBLE ENCROACHMENT BY OWNER OF PARCEL IDENTIFIED BY TAX MAP 129/LOT 001.
7. RIGHTS OF USE BY THE TOWN OF ELLINGTON OF THE PARKING AREA AND TRAVEL LANES OVER LANDS OWNED BY COMMUNITY UNITED METHODIST CHURCH OF CRYSTAL LAKE MAY EXIST.
8. THE SUBJECT PARCEL MAY BE SUBJECT TO AN AGREEMENT FOR USE OF A DUG WELL AS RECORDED IN THE TOWN OF ELLINGTON LAND RECORDS AS VOLUME 53, PAGES 35–36.
9. NO ESTABLISHED STREETLINE RIGHT–OF–WAY IS KNOWN FOR SOUTH ROAD OR SANDY BEACH ROAD IN THE VICINITY OF THE SUBJECT PARCEL.
10. THE DIRECTION OF THE UNDERGROUND UTILITIES (STORM & SEWER PIPES) NOT CONNECTED BETWEEN VISIBLE STRUCTURES (MANHOLES/CATCH BASINS) SHOWN ON THIS MAP ARE APPROXIMATE AND ARE FOR INFORMATIONAL PURPOSES ONLY.
11. TOPOGRAPHY AND UTILITY LOCATIONS SHOWN WITHIN THE FENCED AREA OF THE PUMP STATION, AND THE UTILITY TRENCH LOCATION FROM THE PUMP STATION TO THE SCHOOL BUILDING HAVE BEEN SUPPLEMENTED FROM PROPOSED DRAWINGS AND ARE APPROXIMATE (SEE MAP REFERENCE #2I).
12. EXISTING UTILITIES, WHERE DEPICTED HEREON, ARE APPROXIMATE. NO GUARANTEE IS IMPLIED OR INTENDED AS TO THE ACCURACY, LOCATION, OR THAT ALL UTILITIES AND/OR SUBSURFACE STRUCTURES ARE SHOWN. CONSULT WITH THE APPROPRIATE UTILITY COMPANY OR AGENCY PRIOR TO DESIGNING IMPROVEMENTS AND, COMMENCING DEMOLITION OR CONSTRUCTION. "CALL BEFORE YOU DIG" 1–800–922–4455.

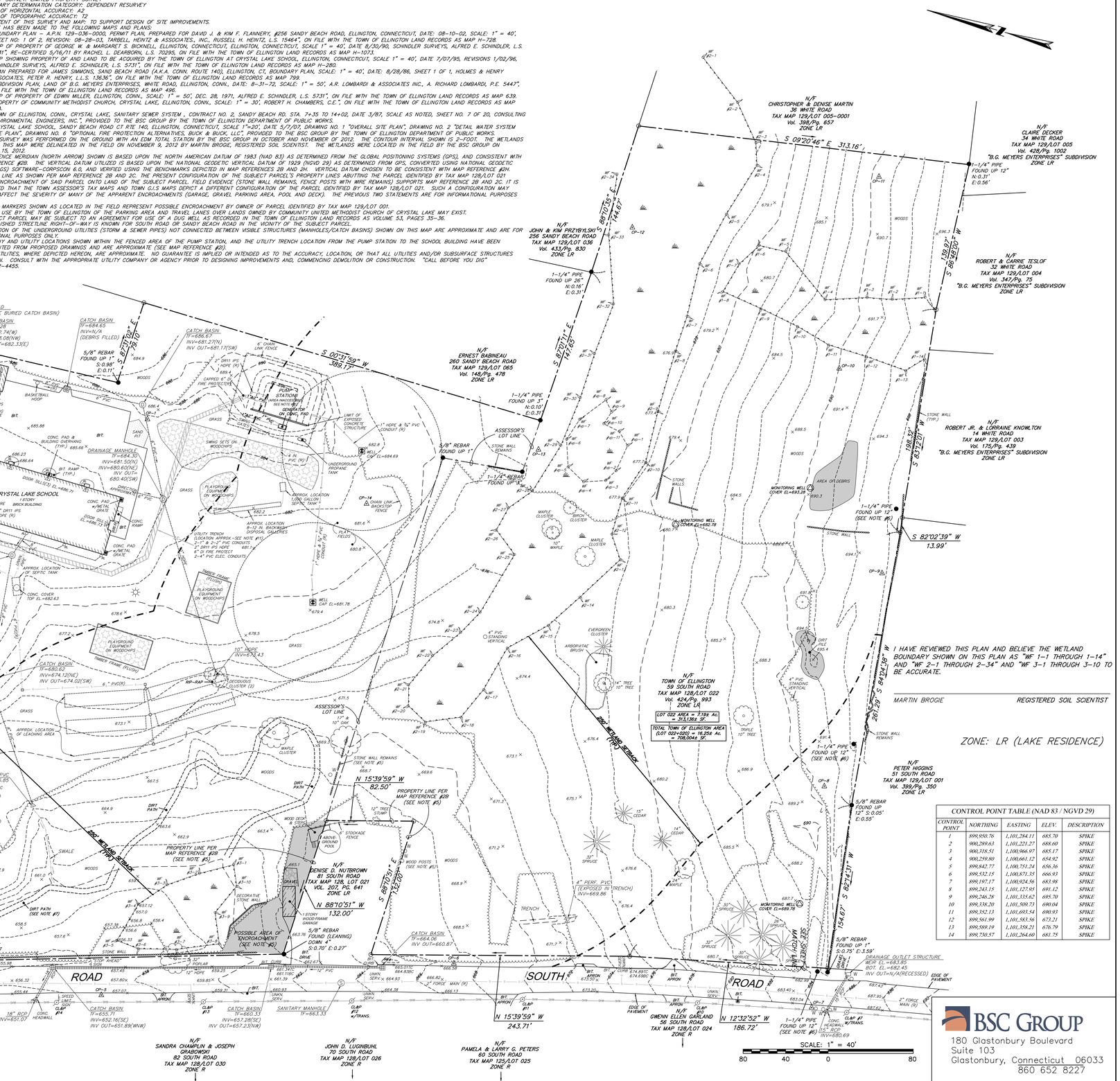

CONTROL POINT TABLE (NAD 83 / NGVD 29)				
CONTROL POINT	NORTHING	EASTING	ELEV.	DESCRIPTION
1	899,950.76	1,101,284.11	685.70	SPIKE
2	900,289.63	1,101,221.27	688.60	SPIKE
3	900,318.51	1,100,986.97	685.17	SPIKE
4	900,259.80	1,100,661.12	654.92	SPIKE
5	899,842.77	1,100,751.24	656.36	SPIKE
6	899,532.15	1,100,871.35	666.93	SPIKE
7	899,197.17	1,100,924.56	683.98	SPIKE
8	898,243.15	1,101,127.95	691.12	SPIKE
9	899,246.28	1,101,335.62	695.70	SPIKE
10	899,338.20	1,101,509.73	690.04	SPIKE
11	899,352.13	1,101,693.54	680.93	SPIKE
12	899,561.99	1,101,583.56	673.21	SPIKE
13	899,589.19	1,101,358.21	676.79	SPIKE
14	899,730.57	1,101,264.60	681.75	SPIKE

BSC GROUP
180 Glastonbury Boulevard
Suite 103
Glastonbury, Connecticut 06033
860 652 8227

Project Title:

Expansion and Renovate as New Project - PHASE 1 of 3

Crystal Lake Elementary School

284 Sandy Beach Road
Ellington, Connecticut 06029

SILVER / PETRUCELLI + ASSOCIATES
Architects / Engineers / Interior Designers
3190 Whitney Avenue, Hamden, CT 06518-2340
Tel. 203 230 9007 Fax. 203 230 8247
silverpetrucelli.com

Revision:	Description:	Date:	Revised By:
--	ISSUED FOR BIDDING	NOV 26, 2013	--

Drawing Title:

Existing Conditions Plan

State Project Number 048-0058 EA/RR/PS

Date: JUNE 18, 2013
Scale: 1"=40'
Drawn By: FJV
Project Number: 12.140
Drawing Number: EC-100

SUGGESTED CONSTRUCTION SEQUENCE

1. THE CONTRACTOR SHOULD MEET WITH TOWN STAFF FOR PRE-CONSTRUCTION MEETING PRIOR TO ANY ACTIVITY.
2. INSTALL CONSTRUCTION ENTRANCE(S).
3. INSTALL PERIMETER EROSION AND SEDIMENT CONTROLS AND CONSTRUCTION FENCE IN ACCORDANCE WITH THIS E&S PLAN.
4. CUT TREES WITHIN THE DEFINED CLEARING LIMITS AND REMOVE CUT WOOD. CHIP BRUSH AND STOCKPILE CHIPS FOR FUTURE USE OR REMOVE FROM SITE TO AN APPROVED DISPOSAL LOCATION.
5. CONSTRUCT TEMPORARY SEDIMENT TRAPS AND DIVERSION SWALES.
6. EXCAVATE ALL STUMPS LOCATED IN STRUCTURAL OR FILL AREAS AND REMOVE TO AN APPROVED DISPOSAL SITE OR STOCKPILE AREA TO BE CHIPPED. STUMPS IN NON-STRUCTURAL AREAS MAY BE GROUND IN PLACE OR CUT FLUSH WITH THE GROUND LEVEL AND LEFT IN PLACE.
7. STRIP ALL TOPSOIL WITHIN THE CONSTRUCTION AND SLOPE LIMITS. STOCKPILE ALL TOPSOIL IN AN APPROVED AREA AND SECURE WITH EROSION AND SEDIMENT CONTROLS.
8. CUT OR FILL TO ESTABLISH THE SUB-GRADE.
9. BEGIN ADDITION AND RENOVATION TO BUILDING.
10. INSTALL ALL DRAINAGE FACILITIES STARTING AT THE OUTFALL AND PROCEEDING UPGRADE. INSTALL REMAINING UTILITIES. ENSURE THAT THE DRAINAGE OUTLET PROTECTION IS IN PLACE PRIOR TO ANY FLOW BEING ALLOWED TO DISCHARGE.
11. BEGIN INSTALLATION OF FIELD SUBGRADE.
12. PLACE, GRADE AND COMPACT THE PROCESSED AGGREGATE IN PARKING AREAS AND SITE DRIVES.
13. TOPSOIL AND GRADE IN ALL SLOPE AREAS TO WITHIN TWO (2) FEET OF THE PROPOSED BUILDING/CURB/EDGE OF PAVEMENT.
14. APPLY STABILIZATION MEASURES TO REMAINING DISTURBED AREAS IN ACCORDANCE WITH THE E&S PLAN (TOPSOIL, SEEDING, SODDING, MULCHING, ETC.)
15. INSTALL CURBING, IF REQUIRED.
16. INSTALL FIRST COURSE OF BITUMINOUS CONCRETE.
17. INSPECT AND CLEAN DRAINAGE SYSTEM, AS NEEDED.
18. INSTALL THE FINAL COURSE OF BITUMINOUS CONCRETE PAVEMENT.
19. AFTER SITE IS STABILIZED IN ACCORDANCE WITH THE APPLICABLE E&S MEASURES, REMOVE TEMPORARY EROSION AND SEDIMENT CONTROLS.

EROSION AND SEDIMENT CONTROL NOTES

1. CONSTRUCTION EROSION SEDIMENTATION CONTROL MEASURES SHALL CONFORM TO THE APPLICABLE SECTIONS OF THE "2002 CONNECTICUT GUIDELINES FOR SOIL EROSION AND SEDIMENT CONTROL."
2. ALL TEMPORARY EROSION AND SEDIMENTATION CONTROL (TEC) MEASURES SHOWN ON THE EROSION & SEDIMENT CONTROL PLAN ARE SHOWN IN A GENERAL SIZE AND LOCATION ONLY. THE CONTRACTOR SHALL BE RESPONSIBLE FOR ENSURING THAT ALL EROSION CONTROL MEASURES ARE CONFIGURED AND CONSTRUCTED IN A MANNER THAT WILL MINIMIZE EROSION OF SOILS AND PREVENT THE TRANSPORT OF SEDIMENTS AND OTHER POLLUTANTS TO THE RESOURCE AREAS AND PROPERTIES ADJACENT TO THE CONSTRUCTION SITE. ACTUAL SITE CONDITIONS OR SEASONAL AND CLIMATIC CONDITIONS MAY WARRANT ADDITIONAL CONTROLS OR CONFIGURATIONS AS DIRECTED BY THE ENGINEER AND/OR THE TOWN ENGINEER.
3. WEEKLY AND POST-RAIN (>0.1-INCH RAINFALL WITHIN 24 HOURS) INSPECTION SHALL BE CONDUCTED ON ALL E&S MEASURES BY THE CONTRACTOR.
4. AFTER EROSION AND SEDIMENTATION CONTROLS ARE IN PLACE, THE CONTRACTOR MAY STRIP SOILS AS REQUIRED. ALL STOCKPILED MATERIAL SHALL BE SUBJECT TO EROSION CONTROL DEVICES THAT SHALL INCLUDE A MINIMUM OF SILT FENCE WITH HAY BALE SUPPORT AND STOCKPILE COVERS. OTHER METHODS MAY INCLUDE MULCHING OR OTHER METHODS THAT PREVENT EROSIVE CONDITIONS.
5. PROVIDE TEMPORARY SEEDING IN ALL EXPOSED SOIL AREAS WHERE WORK WILL BE SUSPENDED FOR LONGER THAN 30 DAYS. APPLY SEED AND MULCH WITHIN THE FIRST 7 DAYS OF SUSPENDING WORK. WHEN SEEDING IS NOT POSSIBLE DUE TO SEASONAL WEATHER CONDITIONS OR OTHER FACTORS, PROVIDE TEMPORARY STRUCTURAL SOIL PROTECTION SUCH AS MULCH, WOODCHIPS, EROSION CONTROL MATTING, OR COMPOST.
6. ALL TEMPORARY SLOPES IN EXCESS OF 3(HOR) TO 1 (VERT) SHALL BE STABILIZED WITH SLOPE STABILIZATION MAT, OR APPROVED EQUIVALENT.
7. DURING THE COURSE OF CONSTRUCTION, ALL SITE RUNOFF SHALL BE DIRECTED TOWARD THE TEMPORARY SEDIMENT TRAPS BY MEANS OF TEMPORARY DIVERSION SWALES AND WATER BARS. NO RUNOFF SHALL BE ALLOWED TO EXIT THE SITE PRIOR TO TREATMENT FOR SEDIMENT REMOVAL.
8. THE CONSTRUCTION SITE SHALL BE CLEAN, WITHOUT ANY ACCUMULATION OF RUBBISH OR CONSTRUCTION DEBRIS. PROPER SANITARY DEVICES SHALL BE MAINTAINED ON-SITE AT ALL TIMES. ALL NECESSARY PRECAUTIONS SHALL BE OBSERVED TO AVOID THE SPILLAGE OF FUEL OR OTHER POLLUTANTS ON THE CONSTRUCTION SITE, AS WELL AS THE ADHERENCE TO ALL APPLICABLE POLICIES AND REGULATIONS RELATED TO SPILL PREVENTION AND RESPONSE.
14. IF ENVIRONMENTAL CONDITIONS REQUIRE DUST CONTROL, PERIODICALLY MOISTEN EXPOSED SOIL SURFACES WITH WATER TO KEEP THOSE SURFACES DAMP.
15. THE CONTRACTOR SHALL BE PREPARED AT ALL TIMES TO SWEEP ADJACENT ROADWAYS IF MUD OR SOIL IS TRACKED ON TO THEM, OR AS DIRECTED BY THE TOWN ENGINEER.
16. ALL EROSION CONTROL DEVICES SHALL BE MAINTAINED THROUGHOUT CONSTRUCTION.
17. ALL CONSTRUCTION ENTRANCES TO BE LOCATED AS SHOWN ON THE PLANS, OR AS FIELD DIRECTED BY THE ENGINEER.
18. TWO WEEKS BEFORE THE FALL SEEDING SEASON BEGINS (AUGUST 15 TO OCTOBER 15), THE CONTRACTOR SHALL SCHEDULE A MEETING WITH CITY STAFF TO DISCUSS STABILIZING THE SITE FOR WINTER MONTHS. MEASURES SUCH AS MULCHING AND/OR SEEDING MAY BE REQUIRED.
19. DEWATERING SETTLING BASINS (SEE DETAIL) SHALL BE USED IF GROUND WATER IS ENCOUNTERED.
20. CATCH BASIN SEDIMENT FILTER SACKS SHALL BE INSTALLED AND CLEANED/CHANGED PER THE MANUFACTURER'S RECOMMENDATIONS. THEY SHALL BE INSTALLED COMPLETELY AROUND INLETS OF EXISTING AND PROPOSED STORMWATER STRUCTURES SO THAT NO RUNOFF IS ALLOWED TO ENTER DRAINAGE SYSTEM WITHOUT FILTERING THROUGH THE SACK.

TEMPORARY E&S MEASURES MAINTENANCE SCHEDULE

E&S MEASURE	SCHEDULE	MAINTENANCE MEASURES
SILT SACKS/ FILTER FABRIC IN DRAINAGE SYSTEM	WEEKLY & WITHIN 24 HOURS AFTER STORM > 0.1 INCHES	CLEAN CATCH BASIN GRATE, REMOVE SEDIMENT/DEBRIS FROM SILT SACKS
WATERBARS	DAILY WHEN EXPOSED TO VEHICLE TRAFFIC & WITHIN 24 HOURS AFTER STORM > 0.1 INCHES	RESHAPE & REPAIR ANY OBSERVED DAMAGES IMMEDIATELY, REMOVE SEDIMENT WHEN ACCUMULATION REACHES APPROX. HALF HEIGHT OF WATER BAR
TEMPORARY SEDIMENT TRAPS	WEEKLY & WITHIN 24 HOURS AFTER STORM > 0.1 INCHES	CHECK AND REPAIR STONE OUTLET, CLEAN WHEN HALF FULL OF SEDIMENT (DEWATER IF NECESSARY), RESTORE TRAP TO ORIGINAL DIMENSIONS
TEMPORARY DIVERSION SWALES	WEEKLY & WITHIN 24 HOURS AFTER STORM > 0.1 INCHES. INSPECT DAILY WHEN CONSTRUCTION ACTIVITIES ARE IN CLOSE PROXIMITY	REPAIR DAMAGED AREAS WITHIN 24 HRS OF OBSERVED FAILURE
HAY BALES/ SILT FENCE BARRIER	WEEKLY & WITHIN 24 HOURS AFTER STORM > 0.1 INCHES	REPAIR/REPLACE WHEN FAILURE OBSERVED, REMOVE SILT WHEN ACCUMULATION REACHES APPROX. HALF HEIGHT OF BARRIER
TARP TEMPORARY STOCKPILES	DAILY	ENSURE TARP IS SECURED OVER STOCKPILE AT THE END OF EACH DAY
CONSTRUCTION ENTRANCE	WEEKLY	SWEEP PAVED ROADWAY ADJACENT TO SITE ENTRANCE AS NECESSARY, REFRESH STONE AS NECESSARY, REMOVE SILTED GRAVEL
MOISTEN EXPOSED SOILS	DAILY	PERIODICALLY MOISTEN EXPOSED SOIL SURFACES WITH WATER ON UNPAVED TRAVELWAYS AND KEEP TRAVELWAYS DAMP

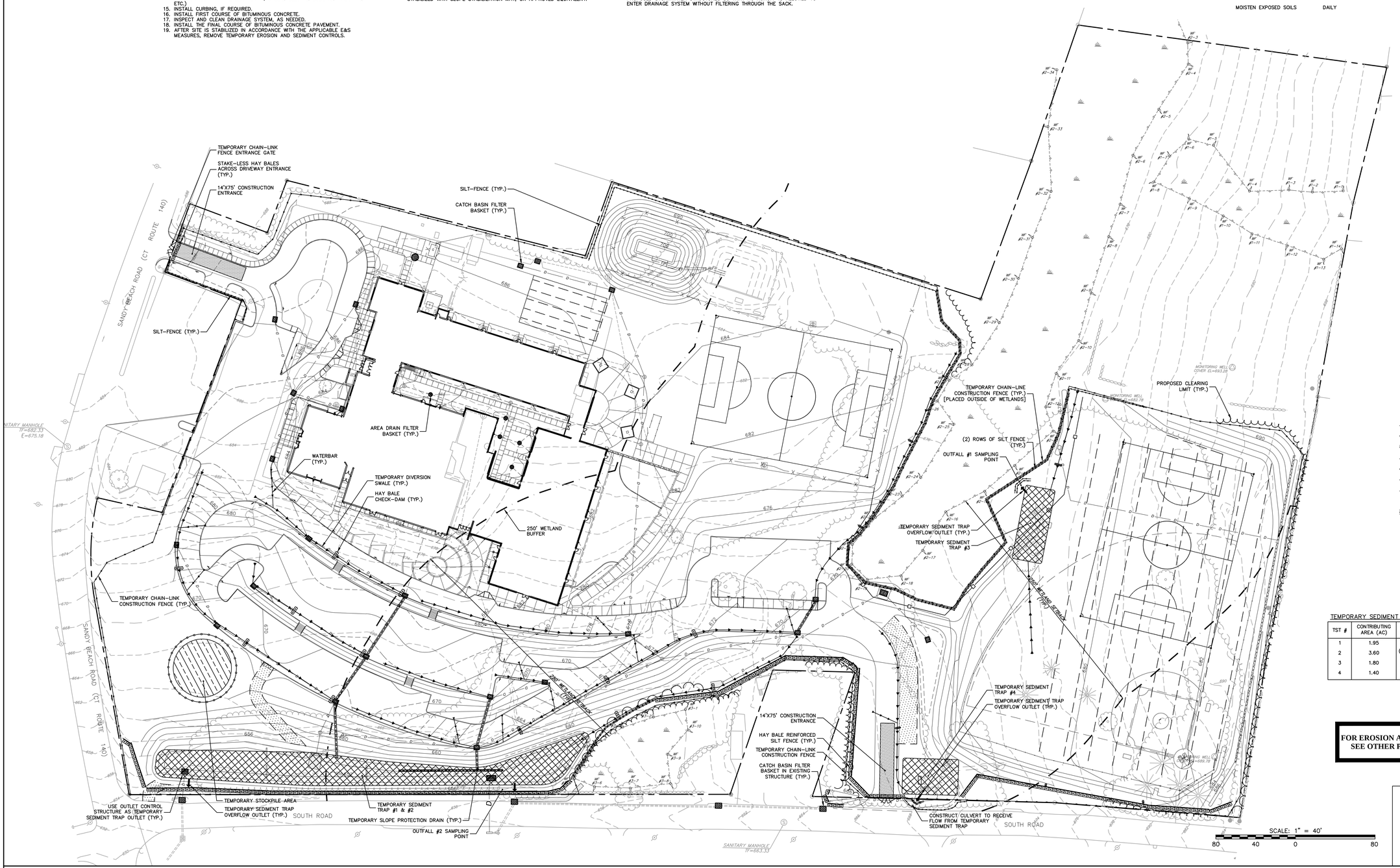

LEGEND

- SEDIMENT TRAP OVERFLOW
- SILT FENCE
- HAY BALES
- HAYBALES AND SILT FENCE
- TEMPORARY CHAINLINK CONSTRUCTION FENCE
- WETLAND SETBACK
- CLEARING LIMIT
- TEMPORARY DIVERSION SWALE
- WATERBAR
- TEMPORARY SLOPE PROTECTION DRAIN
- CATCH BASIN FILER BASKET
- AREA DRAIN FILTER BASKET
- CONSTRUCTION ENTRANCE
- TEMPORARY SEDIMENT TRAP

TEMPORARY SEDIMENT TRAP (TST) INFORMATION

TST #	CONTRIBUTING AREA (AC)	TST TOP DIMENSION	TST BOTTOM DIMENSION	DEPTH	TST TOP ELEVATION	TST BOTTOM ELEVATION
1	1.95	11,800 SF (COMBINED)	6,400 SF (COMBINED)	3.0'	655.0	652.0
2	3.60					
3	1.80	75'x30'	68'x23'	3.5'	677.0	673.5
4	1.40	56'x30'	50'X30'	3.0'	670.0	667.0

FOR EROSION AND SEDIMENTATION CONTROL ONLY - SEE OTHER PLANS FOR CONSTRUCTION DETAILS

BSC GROUP
180 Glastonbury Boulevard
Suite 103
Glastonbury, Connecticut 06033
860 652 8227

Project Title:

Expansion and Renovate as New Project - PHASE 1 of 3

Crystal Lake Elementary School

284 Sandy Beach Road
Ellington, Connecticut 06029

SILVER / PETRUCELLI + ASSOCIATES
Architects / Engineers / Interior Designers
3190 Whitney Avenue, Hamden, CT 06518-2340
Tel. 203 230 9007 Fax. 203 230 8247
silverpetrucelli.com

Revision:	Description:	Date:	Revised By:
--	ISSUED FOR BIDDING	NOV 26, 2013	--

Drawing Title:

Erosion & Sediment Control Plan

State Project Number 048-0058 EA/RR/PS

Date: JUNE 18, 2013
Scale: 1"=40'
Drawn By: FJV
Project Number: 12.140
Drawing Number: C-100

NOTES:

1. FOR DEMOLITION ONLY. SEE OTHER PLANS FOR CONSTRUCTION DETAILS
2. CONTRACTOR SHALL NOTIFY "CALL BEFORE YOU DIG" (1-800-922-4455) AND VERIFY UTILITY MARK-OUT WITH THE UNIVERSITY PRIOR TO THE INITIATION OF ANY SITE DISTURBANCE.
3. PRIOR TO THE REMOVAL OF ANY UTILITY, VERIFY THAT APPLICABLE NOTIFICATIONS HAVE BEEN MADE TO THE UTILITY OWNER/OPERATOR AND THAT THE UTILITY HAS BEEN PROPERLY TERMINATED, CAPPED, OR PLUGGED AS REQUIRED. COORDINATE WITH CL&P FOR ALL ELECTRICAL SERVICE TERMINATIONS.
4. THE LIMIT OF WORK CORRESPONDS TO THE LOCATION OF THE TEMPORARY CHAIN-LINK CONSTRUCTION FENCE, UNLESS OTHERWISE NOTED.
5. WITHIN THE LIMIT OF WORK, ALL EXISTING SITE IMPROVEMENTS, INCLUDING BUT NOT LIMITED TO CONCRETE, CURBING, LIGHT POLES/BASES, BOLLARDS, SIGNS, FENCES AND RAILINGS SHALL BE DEMOLISHED, REMOVED AND PROPERLY DISPOSED OFF SITE, UNLESS OTHERWISE NOTED. ALL BITUMINOUS ASPHALT WILL REMAIN, TO BE USED FOR IN-PLACE RECLAMATION.
6. WITHIN THE LIMIT OF WORK, ALL DRAINAGE FACILITIES (STRUCTURES AND PIPING) SHALL BE REMOVED AND PROPERLY DISPOSED, UNLESS OTHERWISE NOTED.
7. MAINTAIN AND PROTECT ALL EXISTING WELLS, WATER PIPING, ELECTRICAL CONDUITS AND BACKWASH SYSTEM. MARK THESE FACILITIES AND RESTRICT HEAVY EQUIPMENT OPERATIONS IN THEIR VICINITY.
8. REMOVE AND DEMOLISH SEPTIC TANKS, PIPING, AND LEACH FIELD IN ACCORDANCE WITH NORTH CENTRAL DISTRICT HEALTH DEPARTMENT REQUIREMENTS.
9. CONTRACTOR SHALL REMOVE A STAND OF INVASIVE SPECIES LOCATED ALONG THE SOUTH SIDE OF THE WETLANDS THAT IS APPROXIMATELY ½-ACRE IN SIZE. IT IS THE CONTRACTOR'S RESPONSIBILITY TO VISIT THE SITE PRIOR TO BIDDING TO DETERMINE EXACT SIZE OF THE STAND. THE INVASIVE SPECIES LOCATED IN FIELD AREA CONSISTS OF A MATURE *FRAGMITES AUSTRALIS*. THE CONTRACTOR SHALL UTILIZE A CONNECTICUT-LICENSED COMMERCIAL PESTICIDE APPLICATOR TO APPLY A SELECTED HERBICIDE TO THE STAND. A MINIMUM OF THREE WEEKS AFTER APPLICATION THE STAND SHALL BE MOWED AND CUTTINGS REMOVED FROM THE PROPERTY FOR DISPOSAL. PHRAGMITES SHOULD BE TREATED IN EARLY TO LATE SUMMER (JUNE – SEPTEMBER) USING IMAZAPYR, OR LATE SUMMER (AUGUST – SEPTEMBER) USING EITHER GLYPHOSATE OR A GLYPHOSATE/IMAZAPYR MIXTURE. THE STAND SHALL BE BRUSH CUT AT LEAST TWO WEEKS AFTER PESTICIDE APPLICATION, PREFERABLY IN LATE SUMMER OR FALL, OR WITH FROZEN GROUND. THE CONTRACTOR SHALL PERFORM TWO (2) SUBSEQUENT APPLICATIONS AND MOWINGS, ONCE PER YEAR FOR TWO YEARS AFTER THE INITIAL TREATMENT. SPOT APPLICATIONS SHALL BE PERFORMED SUBSEQUENTLY AS NEEDED. FOR BIDDING PURPOSES ASSUME TWO (2) ADDITIONAL SPOT APPLICATIONS.
10. ALL WORK ASSOCIATED WITH THE REMOVAL OF THE UNDERGROUND FUEL STORAGE TANK SHALL BE PERFORMED BY A LICENSED CONTRACTOR IN ACCORDANCE WITH ALL CONNECTICUT DEPARTMENT OF ENERGY AND ENVIRONMENTAL PROTECTION (DEEP) REQUIREMENTS, INCLUDING SAMPLING AND ANALYTICAL METHODS REQUIRED FOR UST CLOSURE. CONTRACTOR SHALL NOTIFY THE TOWN OF ELLINGTON FIRE MARSHALL A MINIMUM OF 48-HOURS PRIOR TO PLANNED TANK REMOVAL ACTIVITIES. ALL HEALTH AND SAFETY MEASURES ASSOCIATED WITH TANK REMOVAL ACTIVITIES SHALL CONFORM TO APPLICABLE OSHA AND NFPA REGULATIONS, STANDARDS, OR GUIDELINES. CONTRACTOR IS RESPONSIBLE FOR COMPLETING ALL REQUIRED REPORTS TO THE DEEP STORAGE TANK ENFORCEMENT UNIT.
11. THIS PROJECT IS NOT A BALANCED SITE. CONTRACTOR RESPONSIBLE FOR EXPORT/IMPORT OF ALL MATERIALS REQUIRED TO COMPLETE CONSTRUCTION.
12. EXISTING PROPANE TANK SHALL BE MOVED AND REPLACED IN PHASE 1. THE CONTRACTOR IS RESPONSIBLE FOR EXCAVATION AND REMOVAL OF THE EXISTING TANK, EXCAVATION OF EARTHEN MATERIAL AT THE TEMPORARY LOCATION, PLACEMENT OF THE EXISTING TANK AT THE TEMPORARY LOCATION, BACKFILL OF BOTH LOCATIONS, AND TRENCHING FOR TEMPORARY PROPANE LINES. IN PHASE 2, THE CONTRACTOR IS RESPONSIBLE FOR REMOVAL AND DEMOLITION OF THE TANK. CONTRACTOR TO FULLY COORDINATE WITH THE PROPANE TANK SUPPLIER/MANUFACTURER.
13. CONTRACTOR TO MAINTAIN UNIVERSAL FLUID ABSORBENT SPILL KIT ONSITE THROUGHOUT DURATION OF PROJECT. FOLLOWING PROJECT COMPLETION, CONTRACTOR SHALL SUPPLY OWNER WITH THEIR OWN PERMANENT 37 GALLON UNIVERSAL FLUID ABSORBENT SPILL KIT FOR USE AT THE COMPLETED FACILITY. UNIVERSAL SPILL KIT SHALL BE "PIG" BRAND "SPILL KIT IN LARGE MOBILE CONTAINER" ITEM #KIT259 OR APPROVED EQUAL.

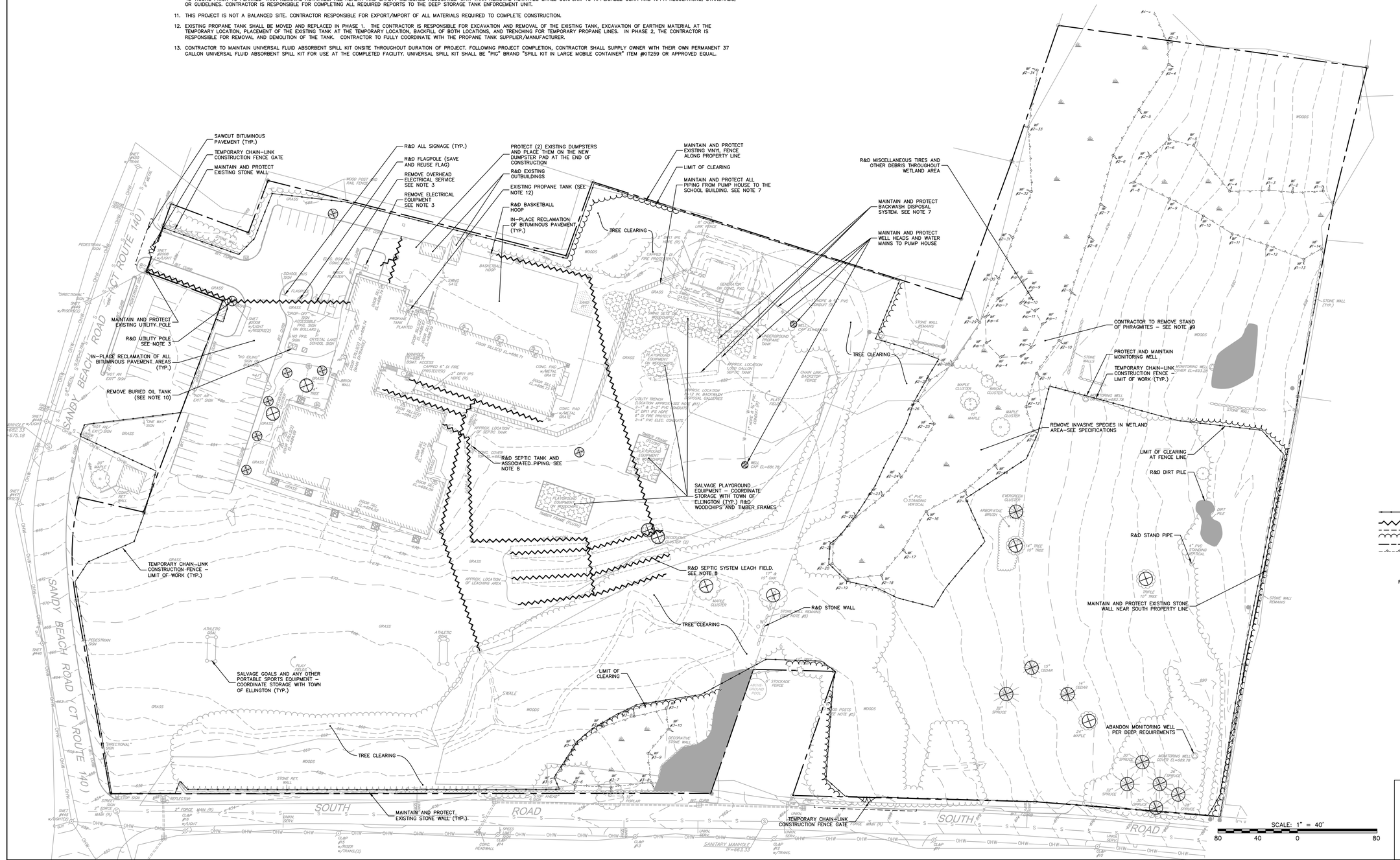

LEGEND

- TEMPORARY CHAIN-LINK CONSTRUCTION FENCE (LIMIT OF WORK)
- REMOVE PIPING
- DEMOLITION SAWCUT
- LIMIT OF CLEARING
- PROPERTY LINE
- WETLAND BOUNDARY
- PROTECT TREE/WELL
- REMOVE TREE/LIGHT POLE
- R&D – REMOVE AND DISPOSE

BSC GROUP
180 Glastonbury Boulevard
Suite 103
Glastonbury, Connecticut 06033
860 652 8227

Project Title:

Expansion and Renovate as New Project - PHASE 1 of 3

Crystal Lake Elementary School

284 Sandy Beach Road
Ellington, Connecticut 06029

SILVER / PETRUCELLI + ASSOCIATES
Architects / Engineers / Interior Designers

3190 Whitney Avenue, Hamden, CT 06518-2340
Tel. 203 230 9007 Fax. 203 230 8247
silverpetrucelli.com

Revision:	Description:	Date:	Revised By:
--	ISSUED FOR BIDDING	NOV 26, 2013	--

Drawing Title:

Site Demolition Plan

State Project Number 048-0058 EA/RR/PS

Date: JUNE 18, 2013
Scale: 1"=40'
Drawn By: FJV
Project Number: 12.140
Drawing Number: C-200

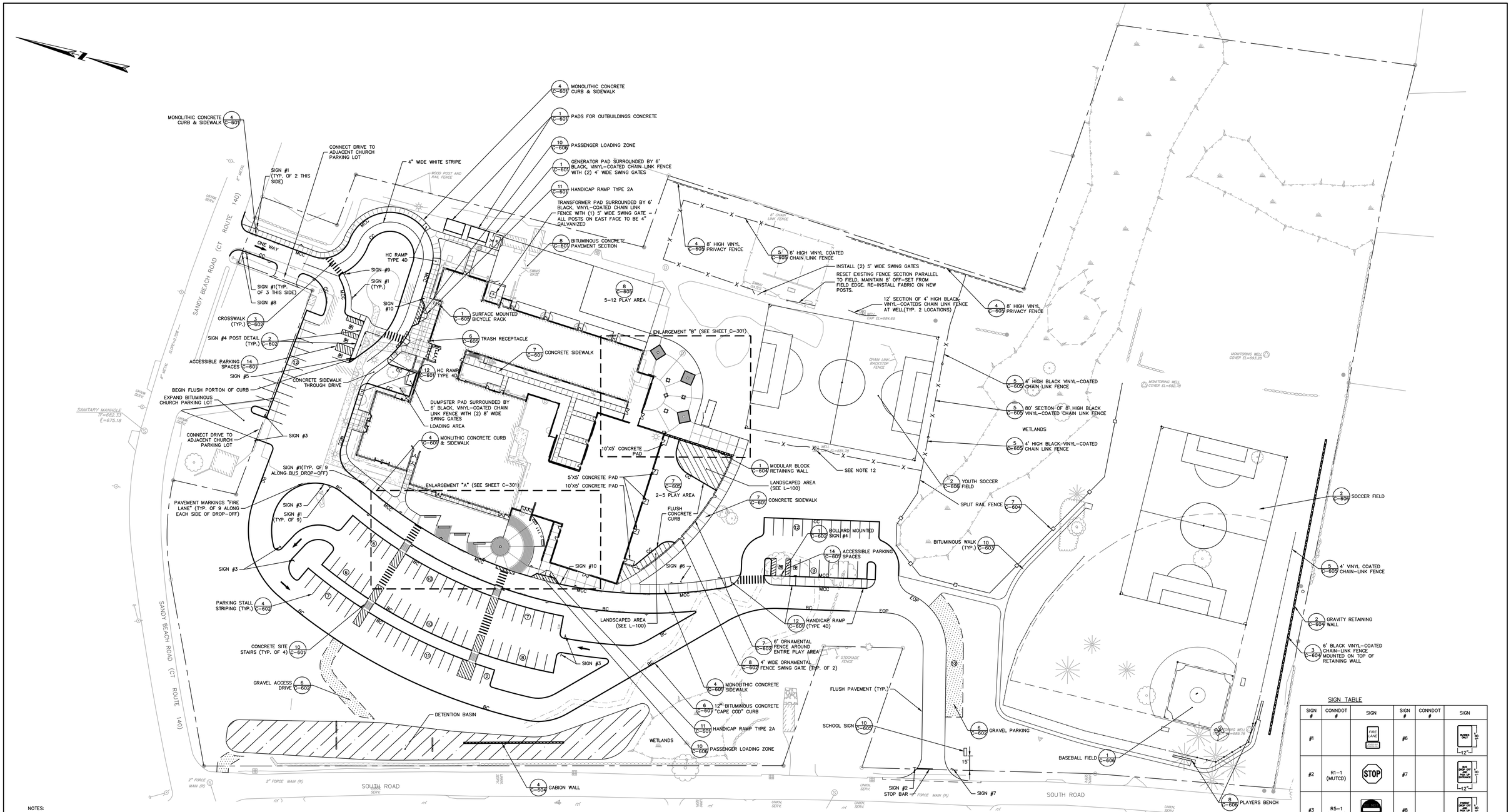

NOTES:

1. CONTRACTOR SHALL NOTIFY "CALL BEFORE YOU DIG" (1-800-922-4455) AND VERIFY UTILITY MARK-OUT WITH THE UNIVERSITY PRIOR TO THE INITIATION OF ANY SITE DISTURBANCE.
2. IMPLEMENTING WORKER SAFETY AND/OR HEALTH PROTOCOLS THAT ADDRESS COMPLIANCE WITH RULES, LAWS, AND REGULATIONS PERTAINING TO CONSTRUCTION SAFETY AND/OR THE POTENTIAL AND/OR ACTUAL RISK OF EXPOSURE TO SITE-SPECIFIC PHYSICAL OR CHEMICAL HAZARDS IS SOLELY THE RESPONSIBILITY OF THE CONTRACTOR.
3. THE CONTRACTOR IS SOLELY RESPONSIBLE FOR VERIFICATION OF THE LOCATION AND NATURE OF ALL SUBSURFACE UTILITIES AT THE PROJECT WHICH MAY BE AFFECTED BY THE WORK. COORDINATE WITH RESPECTIVE UTILITY OWNERS AND PERFORM VERIFICATION OF TYPE, LOCATION AND INVERTS AS REQUIRED.
4. THE LOCATIONS OF EXISTING SITE FEATURES AS SHOWN HAVE BEEN OBTAINED FROM MAPS, SURVEYS, FIELD INSPECTIONS, AND OTHER AVAILABLE INFORMATION. THEY MUST BE CONSIDERED APPROXIMATE BOTH TO LOCATION, SIZE, AND AS-BUILT CONDITION AND ARE PROVIDED FOR INFORMATIONAL PURPOSES ONLY. THE CONTRACTOR IS SOLELY RESPONSIBLE FOR DETERMINING ACTUAL FIELD CONDITIONS.
5. NOTIFY THE ENGINEER OF ANY DISCREPANCIES BETWEEN EXISTING CONDITIONS AND THE CONTRACT DOCUMENTS BEFORE PROCEEDING WITH THAT PORTION OF THE WORK.
6. UNLESS OTHERWISE INDICATED, ALL DISTURBED AREAS SHALL BE RESTORED WITH SIX (6) INCHES OF LOAM, SEED, AND FERTILIZED.
7. ALL CURBING IS MONOLITHIC CURB WHERE IT ABUTS CONCRETE SIDEWALK.
8. THE CROSS-SLOPE OF ALL SIDEWALKS AND WALKWAYS SHALL NOT EXCEED 1 IN 50 (2 %).
9. CONSTRUCTION AND CONTROL JOINTS: SIDEWALK REINFORCEMENT SHALL NOT CONTINUE THROUGH CONSTRUCTION JOINTS. AT CONTROL JOINTS, CUT REINFORCEMENT WIRES. PRIOR TO INITIATION OF CONCRETE FLATWORK, SUBMIT PROPOSED CONSTRUCTION JOINT PLAN TO THE ENGINEER FOR REVIEW AND APPROVAL. COORDINATE SUCH PLAN WITH THE JOINT PATTERNS DEPICTED ON THE DRAWINGS.
10. THE CONTRACTOR SHALL ENSURE THAT ACCESSIBLE ROUTES ARE CONSTRUCTED SO AS NOT TO EXCEED 5.00% LONGITUDINAL SLOPE AND 2.00% CROSS SLOPE.
11. ALL NON-ACCESSIBLE PARKING SPACES ARE 10' X 18'. VERIFY LAYOUT DIMENSIONS BASED ON THE NUMBER OF SPACES INDICATED.
12. THE GRADE ADJACENT TO THE WEST WATER WELL WILL BE RAISED. THE CONTRACTOR SHALL EXTEND THE WELL CASING TO A MINIMUM 18 INCHES ABOVE THE FINISHED GRADE. ALL MATERIALS AND CONSTRUCTION SHALL BE PER CT DPH REQUIREMENTS. SUBMIT SHOP DRAWING FOR REVIEW.
13. FIRE LANE: CURBING SHALL BE PAINTED YELLOW THE ENTIRE LENGTH OF BOTH SIDES OF THE FIRE LANE, WHICH SHALL ALSO HAVE "FIRE LANE" PAINTED ON THE BITUMINOUS CONCRETE IN LOCATIONS SHOWN. PAINTED LETTERS ON THE DRIVEWAY SHALL BE 12" HIGH. PAINTED MARKINGS AND FIRE LANE SIGNS SHALL BE SET AT 50' INTERVALS, EXCEPT THAT AFTER THE FIRST PAIR, THE SIGNS AND PAINTED MARKINGS SHALL BE ALTERNATED EVERY 25' SO AS TO STAGGER THE SIGNS AND MARKINGS, AS SHOWN. THE FIRE LANE SIGN AT THE EASTERNMOST CURBING AT THE WEST SIDE OF THE SCHOOL SHALL HAVE AN ADDITIONAL SIGN READING "SCHOOL BUS STANDING ONLY".
14. USE CONCRETE SIDEWALK DETAIL FOR ALL CONCRETE PADS.
15. FOLLOWING PROJECT COMPLETION, CONTRACTOR SHALL SUPPLY OWNER WITH THEIR OWN PERMANENT 37 GALLON UNIVERSAL FLUID ABSORBENT SPILL KIT FOR USE AT THE COMPLETED FACILITY. UNIVERSAL SPILL KIT SHALL BE "PIG" BRAND "SPILL KIT IN LARGE MOBILE CONTAINER" ITEM #KIT259 OR APPROVED EQUAL.
16. CONTRACTOR SHALL SECURE WETLANDS PLACARDS EVERY 100', OR AS DIRECTED BY THE TOWN, ON THE SPLIT RAIL FENCE ADJACENT THE WETLANDS. THE PLACARDS SHALL BE PROVIDED BY THE TOWN. THE CONTRACTOR SHALL SUBMIT FOR APPROVAL A SHOP DRAWING DESCRIBING THE METHOD OF SECURING THE PLACARDS TO THE FENCE.

PARKING TABLE

TOTAL PROVIDED SPACES	115 (103 PAVED/12 GRAVEL)
TOTAL REQUIRED ACCESSIBLE SPACES*	5
TOTAL PROVIDED ACCESSIBLE SPACES	5

*PER CONNECTICUT BUILDING CODE

LEGEND

TYP. – TYPICAL
MCC – MONOLITHIC CONCRETE CURB
BC – BITUMINOUS CURB (CAPE COD)
CC – CONCRETE CURB
EOP – EDGE OF PAVEMENT
– SIGN
– CURBING
– GRAVEL DRIVE
– RETAINING WALL
– SPLIT RAIL FENCE
– VINYL CHAIN LINK FENCE
– VINYL PRIVACY FENCE
– CONSTRUCTION JOINTS
– LANDSCAPED AREA
– GRAVEL PARKING

SIGN TABLE

SIGN #	CONNDOT #	SIGN	SIGN #	CONNDOT #	SIGN
#1		FIRE LANE NO PARKING	#6		BUSES ONLY 18" 12"
#2	R1-1 (MUTCD)	STOP	#7		BUS DROP-OFF ONLY TEMPORARY ENTRANCE 18" 12"
#3	R5-1 (MUTCD)	DO NOT ENTER	#8		A SAFE PLACE FOR BUS DROP-OFF 18" 12"
#4	31-0629	VAN ACCESSIBLE PRIORITY PARKING ABOVE 24" 12"	#9		A SAFE PLACE FOR VISITOR PARKING 18" 12"
#5	31-0629 31-0648	VAN ACCESSIBLE PRIORITY PARKING ABOVE 24" 12" 6" LEAN RIGHT	#10		ACCESSIBLE PARKING SPACE 24" 12"

BSC GROUP
180 Glastonbury Boulevard
Suite 103
Glastonbury, Connecticut 06033
860 652 8227

Project Title:
Expansion and Renovate as New Project - PHASE 1 of 3
Crystal Lake Elementary School
284 Sandy Beach Road
Ellington, Connecticut 06029

SILVER / PETRUCELLI + ASSOCIATES
Architects / Engineers / Interior Designers
3190 Whitney Avenue, Hamden, CT 06518-2340
Tel. 203 230 9007 Fax. 203 230 8247
silverpetrucelli.com

Revision:	Description:	Date:	Revised By:
--	ISSUED FOR BIDDING	NOV 26, 2013	--

Drawing Title:
Layout & Materials Plan
State Project Number 048-0058 EA/RR/PS

Date: JUNE 18, 2013
Scale: 1"=40'
Drawn By: FJV
Project Number: 12.140
Drawing Number: C-300

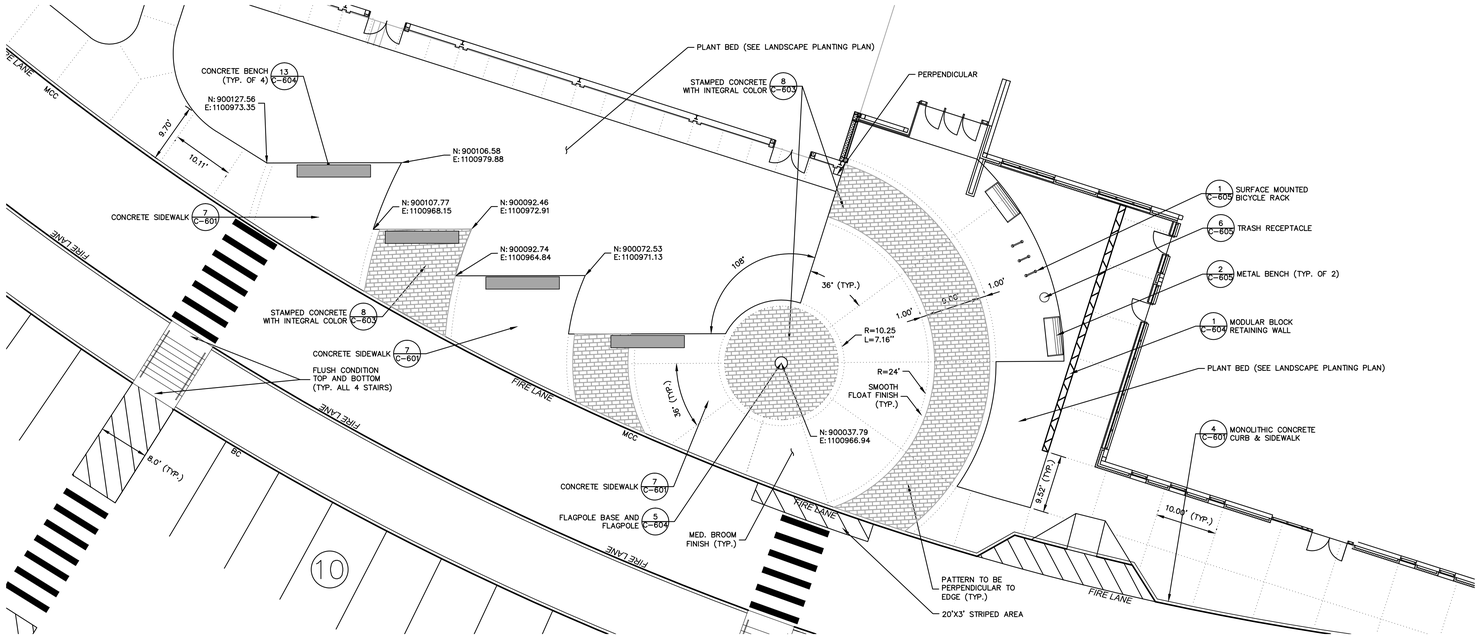

ENLARGEMENT "A" - MAIN ENTRANCE

SCALE: 1" = 10'-0"

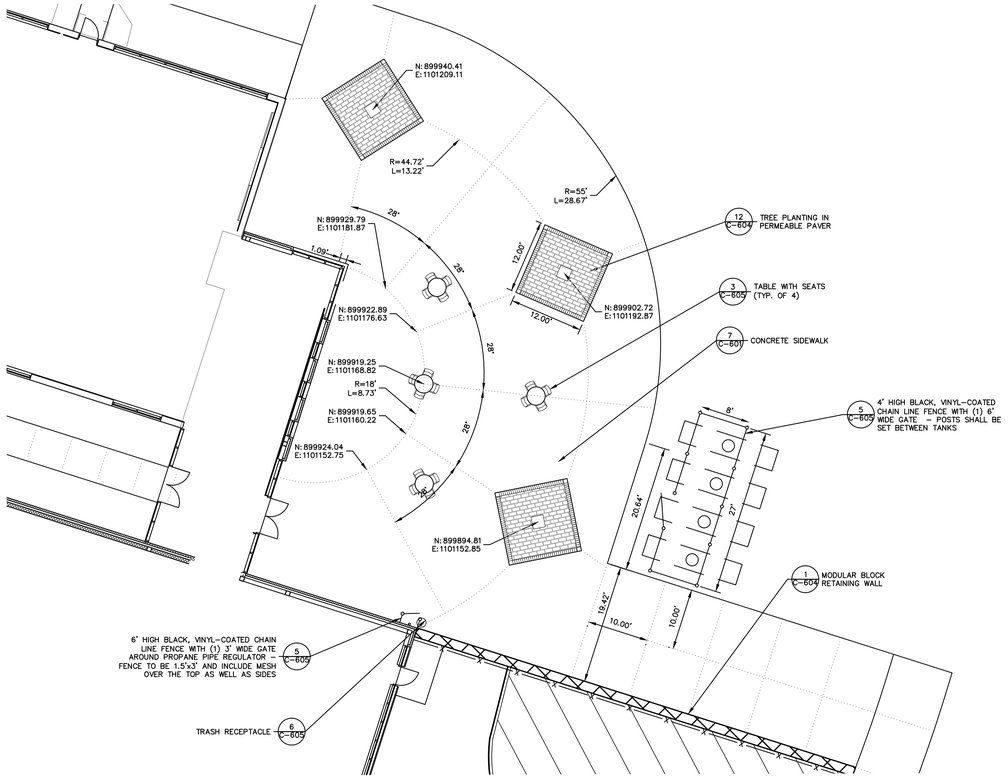

ENLARGEMENT "B" - REAR ENTRANCE

SCALE: 1" = 10'-0"

BSC GROUP
180 Glastonbury Boulevard
Suite 103
Glastonbury, Connecticut 06033
860 652 8227

Project Title:

Expansion and Renovate as New Project - PHASE 1 of 3

Crystal Lake Elementary School

284 Sandy Beach Road
Ellington, Connecticut 06029

SILVER / PETRUCELLI + ASSOCIATES
Architects / Engineers / Interior Designers

3190 Whitney Avenue, Hamden, CT 06518-2340
Tel. 203 230 9007 Fax. 203 230 8247
silverpetrucelli.com

Revision:	Description:	Date:	Revised By:
--	ISSUED FOR BIDDING	NOV 26, 2013	--

Drawing Title:

Enlarged Layout & Materials Plan

State Project Number 048-0058 EA/RR/PS

Date: JUNE 18, 2013
Scale: AS SHOWN
Drawn By: FJV
Project Number: 12.140

Drawing Number: C-301

NOTES:

1. THE DIMENSIONS SHOWN ON THE PLANS, INCLUDING THE INTENDED DIMENSIONS OF THE WORK, MAY VARY FROM ACTUAL EXISTING CONDITIONS IN THE FIELD. THE CONTRACTOR SHALL TAKE APPROPRIATE MEASUREMENTS TO VERIFY ALL DIMENSIONS SHOWN ON THE DRAWINGS AS WELL AS OTHER DIMENSIONS HE MAY DEEM APPROPRIATE TO FACILITATE THE COMPLETION OF THE WORK. NOTIFY THE ENGINEER OF ANY DISCREPANCIES BETWEEN EXISTING CONDITIONS AND THE CONTRACT DOCUMENTS BEFORE PROCEEDING WITH THAT PORTION OF THE WORK.
2. THE CONTRACTOR SHALL ESTABLISH PERMANENT BENCH MARKS. MAINTAIN ALL ESTABLISHED BOUNDS AND BENCHMARKS AND REPLACE AS DIRECTED ANY WHICH ARE DESTROYED OR DISTURBED.
3. DIMENSIONS INDICATED ARE TO FACE OF WALL, FACE OF CURB, PAVEMENT EDGE, EDGE OR CENTERLINE OF IMPROVEMENT, OR AS OTHERWISE NOTED.
4. ENGAGE A CONNECTICUT-LICENSED LAND SURVEYOR TO PERFORM LAND-SURVEYING SERVICES REQUIRED, INCLUDING, BUT NOT LIMITED TO VERIFICATION AND LAYOUT OF BASELINES, PROPOSED IMPROVEMENTS, DIMENSIONS AND ELEVATIONS. REPORT DISCREPANCIES TO UNIVERSITY REPRESENTATIVE.
5. PROVIDE FOR THE LAYOUT AND STAKING/MARKING OF THE PROPOSED LOCATION OF ALL PROPOSED SITE IMPROVEMENTS, INCLUDING FURNISHINGS. OBTAIN THE CLIENT'S APPROVAL OF THE LAYOUT PRIOR TO PROCEEDING WITH THE WORK.
6. THE CONTRACTOR SHALL LAYOUT THE CENTERLINE OF ROADWAY AND OFFSET IN BOTH DIRECTIONS TO LOCATE THE EDGE OF THE CURBING.
7. ALL CURVE RADII ARE 5.0' UNLESS OTHERWISE NOTED.

BSC GROUP
180 Glastonbury Boulevard
Suite 103
Glastonbury, Connecticut 06033
860 652 8227

Project Title:

Expansion and Renovate as New Project - PHASE 1 of 3

Crystal Lake Elementary School

284 Sandy Beach Road
Ellington, Connecticut 06029

SILVER / PETRUCELLI + ASSOCIATES
Architects / Engineers / Interior Designers

3190 Whitney Avenue, Hamden, CT 06518-2340
Tel. 203 230 9007 Fax. 203 230 8247
silverpetrucelli.com

Revision:	Description:	Date:	Revised By:
--	ISSUED FOR BIDDING	NOV 26, 2013	--

Drawing Title:

Layout Plan

State Project Number 048-0058 EA/RR/PS

Date: JUNE 18, 2013
Scale: 1"=40'
Drawn By: FJV
Project Number: 12.140
Drawing Number: C-302

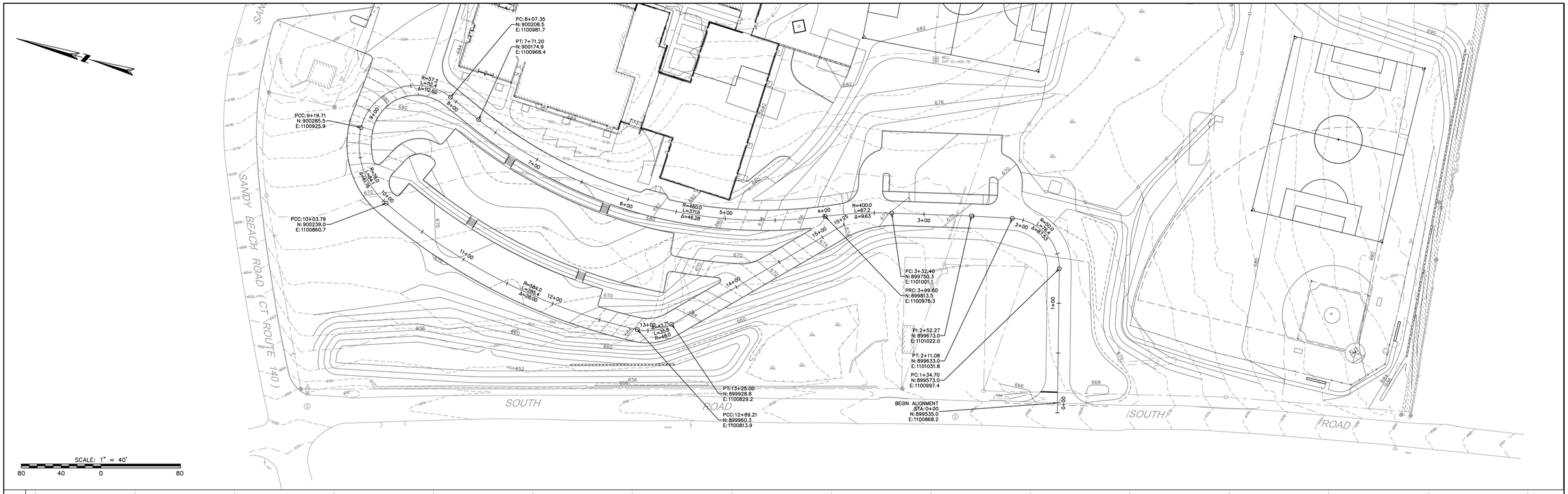

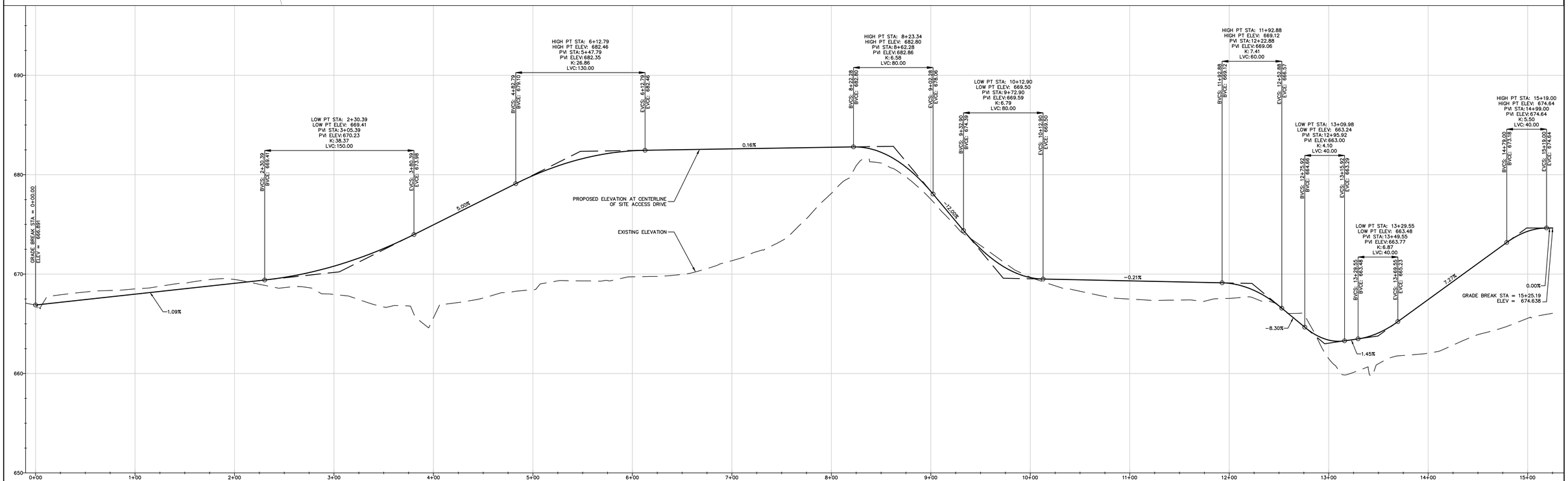

BSC GROUP
180 Glastonbury Boulevard
Suite 103
Glastonbury, Connecticut 06033
860 652 8227

Project Title:

Expansion and Renovate as New Project - PHASE 1 of 3

Crystal Lake Elementary School

284 Sandy Beach Road
Ellington, Connecticut 06029

SILVER / PETRUCELLI + ASSOCIATES
Architects / Engineers / Interior Designers
3190 Whitney Avenue, Hamden, CT 06518-2340
Tel. 203 230 9007 Fax. 203 230 8247
silverpetrucelli.com

Revision:	Description:	Date:	Revised By:
--	ISSUED FOR BIDDING	NOV 26, 2013	--

Drawing Title:

Plan & Profile

State Project Number 048-0058 EA/RR/PS

Date: JUNE 18, 2013
Scale: AS SHOWN
Drawn By: FJV
Project Number: 12.140

Drawing Number: C-303

NOTES:

1. CONTRACTOR SHALL NOTIFY "CALL BEFORE YOU DIG" (1-800-922-4455) AND VERIFY UTILITY MARK-OUT WITH THE RESPECTIVE UTILITY OWNERS PRIOR TO THE INITIATION OF ANY SITE DISTURBANCE.
2. THE CONTRACTOR IS SOLELY RESPONSIBLE FOR VERIFICATION OF THE LOCATION AND NATURE OF ALL SUBSURFACE UTILITIES AT THE PROJECT WHICH MAY BE AFFECTED BY THE WORK. COORDINATE WITH RESPECTIVE UTILITY OWNERS AND PERFORM VERIFICATION OF TYPE, LOCATION AND INVERTS AS REQUIRED.
3. THE CONTRACTOR SHALL NOTIFY THE ENGINEER OF ANY AND ALL DISCREPANCIES BETWEEN EXISTING CONDITIONS AND THE CONTRACT DOCUMENTS BEFORE PROCEEDING WITH THAT PORTION OF THE WORK.
4. PROPOSED GRADES INDICATE DESIGN INTENT. VERIFY ELEVATIONS AND MAKE ADJUSTMENTS TO MEET FIELD CONDITIONS AS APPROVED BY THE ENGINEER.
5. GRADE TRANSITION BETWEEN TOPOGRAPHIC LINES AND SPOT GRADES SHALL BE UNIFORM UNLESS OTHERWISE INDICATED.
6. ALL PROPOSED DRAINAGE PIPE SHALL BE RCP EXCEPT ROOF DRAINAGE AND COURTYARD PIPING AND UNDERDRAINAGE. NON-RCP PIPE SHALL BE HDPE AND SHALL BE SMOOTH INTERIOR, ASTM D3350, CELL CLASSIFICATION 324420C.
7. ALL CATCH BASINS SET AGAINST CURBS SHALL BE CONNDOT TYPE "C".
8. THE PROPOSED FIRE TANK DIMENSIONS ARE 10' DIAMETER x 37'-8¾" LONG. THE BOTTOM OF THE TANK MUST BE PLACED AT AN ELEVATION THAT IS A MINIMUM OF TWO (2) FEET ABOVE THE EXISTING FINISH FLOOR GRADE OF THE WELL BUILDING, WHICH IS APPROXIMATELY ELEVATION 688.5. A MINIMUM OF FIVE (5) FEET OF COMMON FILL MUST BE PLACED OVER THE TOP OF THE TANK. IT IS THE CONTRACTOR'S RESPONSIBILITY TO DETERMINE THE EXACT FINISH GRADE OF THE EXISTING WELL HOUSE AND ENSURE THE PROPER VERTICAL PLACEMENT OF FIRE TANK AND EARTHEN COVER.
9. AT THE CONCLUSION OF THE WORK, CONTRACTOR SHALL REMOVE ALL ACCUMULATED SEDIMENT MATERIAL FROM ALL PORTIONS OF THE STORM DRAINAGE SYSTEM, INCLUDING NEW WORK AND EXISTING WORK THAT REMAINS OR IS INCORPORATED INTO THE NEW SYSTEM.
10. FOR THIS BID PACKAGE, THE SCOPE WILL BRING THE 2-5 PLAY AREA TO 3.25 INCHES BELOW FINISH GRADE. SEE DETAIL 7/C-605.
11. FOR THIS BID PACKAGE, THE SCOPE WILL BRING THE 5-12 PLAY AREA TO 12 INCHES BELOW FINISH GRADE, INCLUDING SUB-DRAINAGE. SEE DETAIL 8/C-605.
12. ENSURE FLUSH CONDITION AT ALL EXTERIOR DOOR ENTRANCES.
13. ALL LANDSCAPE SLOPES SHALL BE 3(H):1(V) MAX, EXCEPT THE FOLLOWING, WHICH SHALL BE 2(H):1(V):
    - EARTHEN MOUND OVER FIRE TANK
    - SLOPE BETWEEN SOUTH PROPERTY LINE AND RETAINING WALL
    - PORTION OF SLOPE BETWEEN THE DETENTION BASIN AND THE PAVED DRIVE
14. CONTRACTOR SHALL PROVIDE AN AS-BUILT OF DETENTION BASIN GRADES AND COORDINATE WITH THE OWNER TO HAVE COMPACTION TESTING DONE FOR EMBANKMENTS REQUIRING FILL. COMPACTION OF 95% MODIFIED PROCTOR DENSITY WILL BE REQUIRED AS A BASIS FOR ACCEPTANCE BY THE OWNER.

	MAINTENANCE MEASURE	ACTIVITY	SCHEDULE
DETENTION BASIN MAINTENANCE SCHEDULE	1	– INSPECT FOR DAMAGE TO BASIN – NOTE SIGNS OF HYDROCARBON BUILDUP, AND REMOVE IF DETECTED – MONITOR FOR SEDIMENT ACCUMULATION – EXAMINE TO ENSURE THAT INLET AND OUTLET DEVICES ARE FREE OF DEBRIS AND OPERATIONAL	ANNUAL INSPECTION
	2	– REPAIR UNDERCUT OR ERODED AREAS	AS-NEEDED MAINTENANCE
	3	– CLEAN AND REMOVE DEBRIS FROM INLET AND OUTLET STRUCTURES – MOW SIDE SLOPES	MONTHLY MAINTENANCE
	4	– REMOVED SEDIMENT WHEN THE BASIN VOLUME HAS BEEN SIGNIFICANTLY REDUCED OR WHEN SIGNIFICANT ALGAL GROWTH IS OBSERVED	10 YEAR MAINTENANCE

	MAINTENANCE MEASURE	ACTIVITY	SCHEDULE
CATCH BASIN MAINTENANCE SCHEDULE	1	– INSPECT AND CLEAN WHEN THE SUMP IS 1/2 FULL OF SILT AND/OR DEBRIS.	SEMI-ANNUALLY

LEGEND

- 680 – TOPOGRAPHY: MAJOR INTERVAL WITH LABEL
- TOPOGRAPHY: MINOR INTERVAL
- TOPOGRAPHY: 1 FOOT CONTOUR
- 680.20 – TOPOGRAPHY: SPOTGRADE
- STORMWATER PIPE
- ROOF LEADER
- STORM MANHOLE
- TYPE "C-L" CATCH BASIN
- TYPE "C" CATCH BASIN
- REINFORCED CONCRETE CULVERT END
- YARD/AREA DRAIN

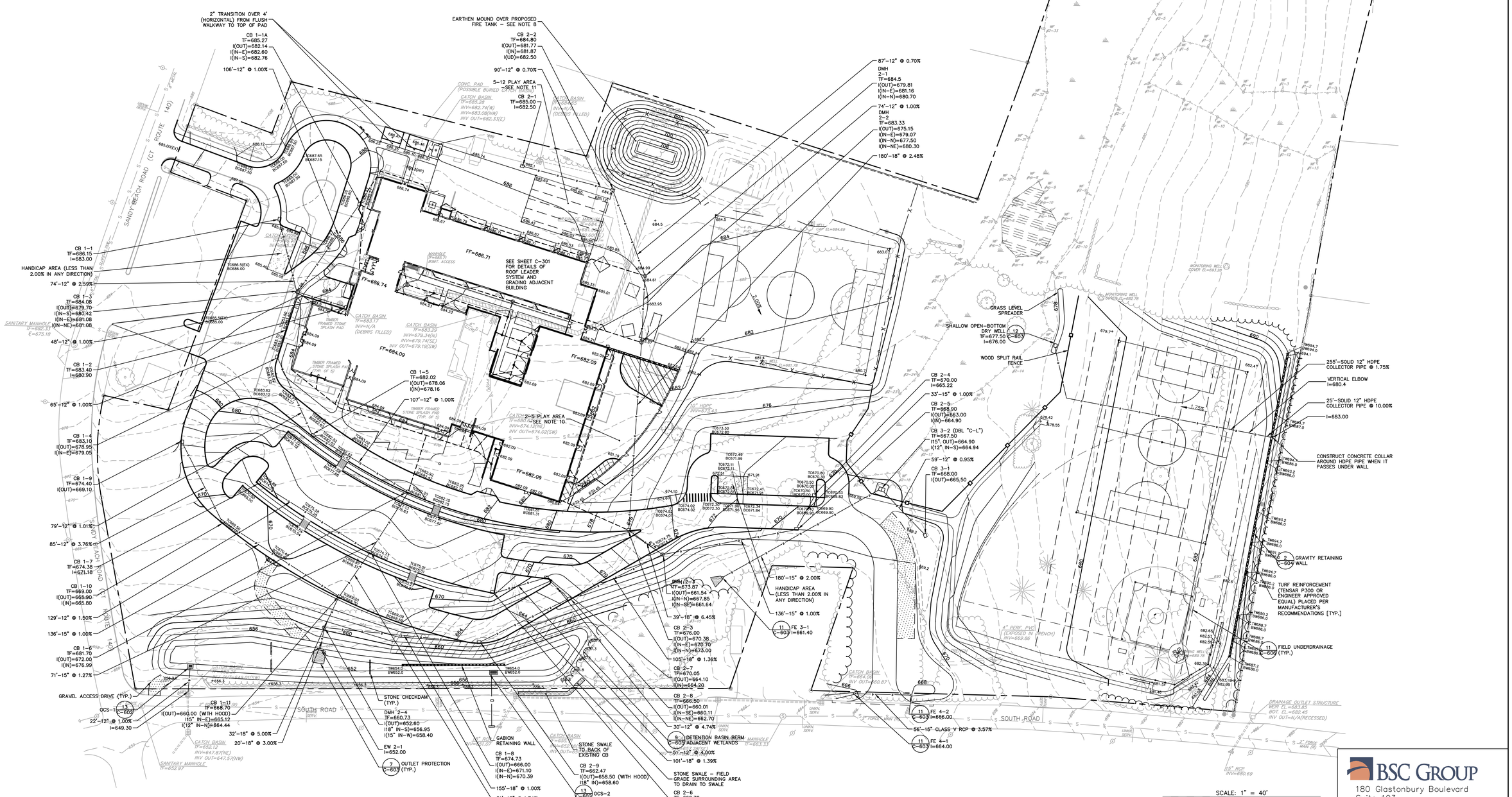

BSC GROUP
180 Glastonbury Boulevard
Suite 103
Glastonbury, Connecticut 06033
860 652 8227

Project Title:
Expansion and Renovate as New Project - PHASE 1 of 3
Crystal Lake Elementary School
284 Sandy Beach Road
Ellington, Connecticut 06029

SILVER / PETRUCELLI + ASSOCIATES
Architects / Engineers / Interior Designers
3190 Whitney Avenue, Hamden, CT 06518-2340
Tel. 203 230 9007 Fax. 203 230 8247
silverpetrucelli.com

Revision:	Description:	Date:	Revised By:
--	ISSUED FOR BIDDING	NOV 26, 2013	--

Drawing Title:
Grading & Drainage Plan
State Project Number 048-0058 EA/RR/PS

Date: JUNE 18, 2013
Scale: 1"=40'
Drawn By: FJV
Project Number: 12.140
Drawing Number: C-400

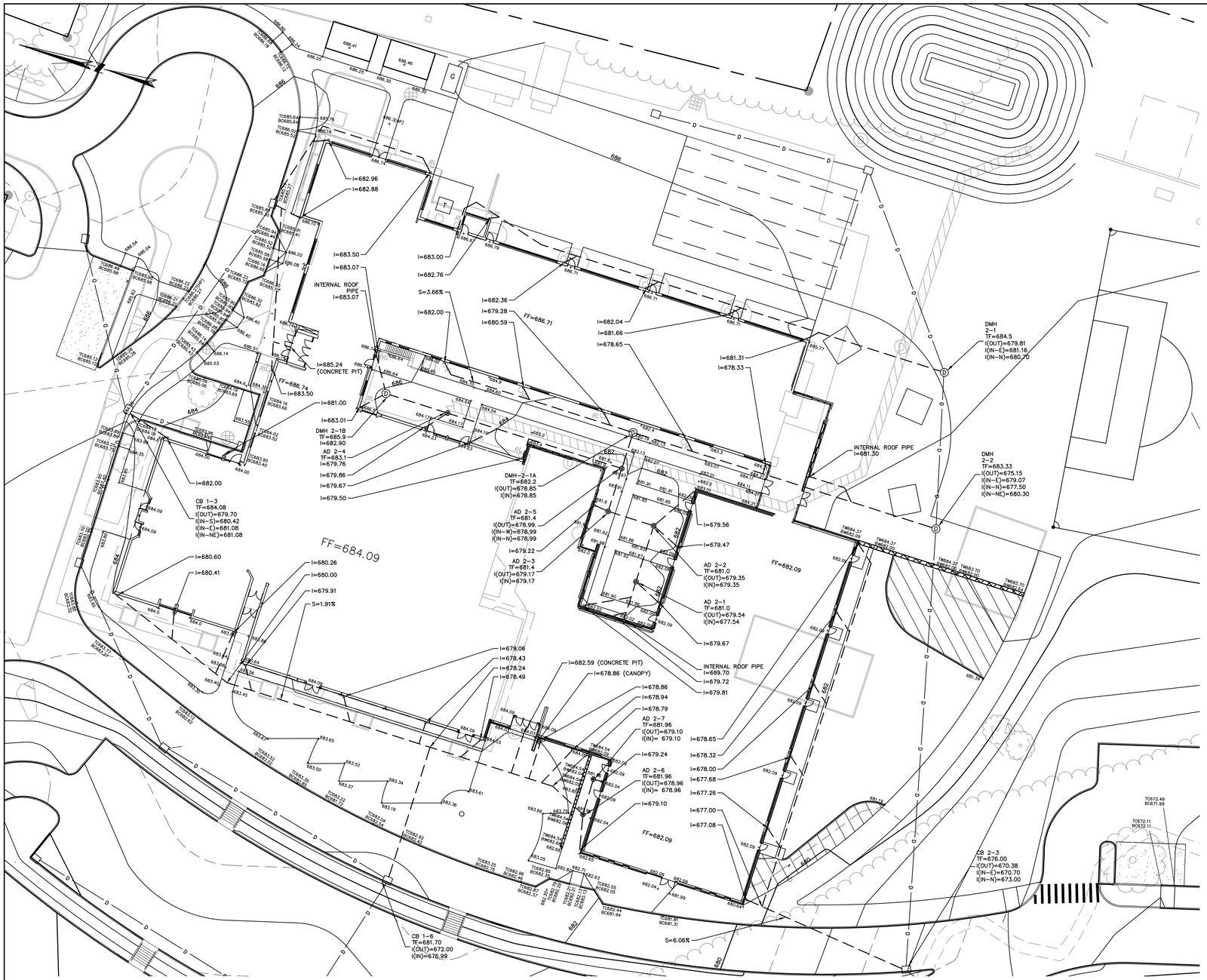

ENLARGEMENT - AREA ADJACENT BUILDING
SCALE: 1" = 20'

NOTES:

1. ALL ROOF DRAINAGE AND COURTYARD PIPING, AS SHOWN ON THIS PLAN, SHALL BE:
   - 6" DIAMETER FOR ALL CONNECTIONS TO DOWNSPOUTS OR INTERNAL ROOF PIPING
   - 12" DIAMETER FOR ALL PIPING THAT COLLECTS FLOW FROM MORE THAN ONE SOURCE
   - HDPE, SMOOTH INTERIOR, ASTM D3350, CELL CLASSIFICATION 324420C
   - SET AT 1.00% SLOPE, UNLESS OTHERWISE NOTED
   - PLACED PER THE MANUFACTURER'S RECOMMENDATIONS
2. CONTRACTOR RESPONSIBLE FOR ALL FITTINGS AS REQUIRED TO CONNECT ROOF DOWNSPOUTS TO CAST IRON BOOTS TO UNDERGROUND PIPING.
3. ALL COURTYARD GRADING SHALL BE PITCHED AWAY FROM THE BUILDING AND DOORS.
4. THE SLOPE OF THE COURTYARD WALKWAYS SHALL BE 5.00% MAXIMUM LONGITUDINAL SLOPE AND 2.00% MAXIMUM CROSS SLOPE.
5. THE MAXIMUM HEIGHT FOR THE MODULAR BLOCK WALLS SHOWN ON THIS PLAN SHALL BE 30".
6. SEE ARCHITECTURAL PLANS FOR TRANSITION FROM 4" CAST IRON DOWNSPOUT BOOT TO 6" DIAMETER HDPE UNDERGROUND PIPING.
7. USE TEST PITS TO CONFIRM LOCATION OF EXISTING WATER/FIRE PROTECTION PIPING AT ALL DRAINAGE CROSSINGS PRIOR TO THE INSTALLATION OF ANY DRAINAGE. VERIFY THE ENGINEER IF THERE ARE POTENTIAL CONFLICTS.

LEGEND

- 680 – TOPOGRAPHY: MAJOR INTERVAL WITH LABEL
- TOPOGRAPHY: MINOR INTERVAL
- TOPOGRAPHY: 1 FOOT CONTOUR
- x680.20 – TOPOGRAPHY: SPOTGRADE
- STORMWATER PIPE
- ROOF LEADER
- STORM MANHOLE
- TYPE "C-L" CATCH BASIN
- TYPE "C" CATCH BASIN
- REINFORCED CONCRETE CULVERT END
- YARD/AREA DRAIN

SCALE: 1" = 20'
40 20 0 40

BSC GROUP
180 Glastonbury Boulevard
Suite 103
Glastonbury, Connecticut 06033
860 652 8227

Project Title:
Expansion and Renovate as New Project - PHASE 1 of 3
Crystal Lake Elementary School
284 Sandy Beach Road
Ellington, Connecticut 06029

SILVER / PETRUCELLI + ASSOCIATES
Architects / Engineers / Interior Designers
3190 Whitney Avenue, Hamden, CT 06518-2340
Tel. 203 230 9007 Fax. 203 230 8247
silverpetrucelli.com

Revision:	Description:	Date:	Revised By:
--	ISSUED FOR BIDDING	NOV 26, 2013	--

Drawing Title:
Grading & Drainage Plan
State Project Number 048-0058 EA/RR/PS

Date: JUNE 18, 2013
Scale: 1"=20'
Drawn By: FJV
Project Number: 12.140
Drawing Number: C-401

NOTES:

1. SEE MEP PLANS FOR DETAILS AND SPECIFICATIONS FOR WATER AND FIRE STRUCTURES AND PIPING.
2. ALL WORK RELATED TO SANITARY SEWERS SHALL CONFORM TO TOWN OF ELLINGTON STANDARDS AND SPECIFICATIONS. ALL PIPE SHALL BE PVC.
3. ALL WORK RELATED TO ELECTRIC SERVICE SHALL CONFORM TO CL&P STANDARDS AND SPECIFICATIONS.
4. SEE MEP PLANS FOR ROUTING OF LIGHTING CONDUITS, HANDHOLES, AND TRANSFORMER PAD DETAILS.
5. SEE MEP PLANS AND SPECIFICATIONS FOR PROPANE TANKS AND PIPING DETAILS, AS WELL AS SCOPE. TANKS SHALL BE LOCATED AS SHOWN ON THIS PLAN. CONTRACTOR SHALL BE RESPONSIBLE FOR ALL EARTHWORK ASSOCIATED WITH TANK/PIPING PLACEMENT INCLUDING, BUT NOT LIMITED TO, EXCAVATION, TANK PLACEMENT, TANK AND PIPE BEDDING, AND BACKFILL. CONTRACTOR ALSO RESPONSIBLE FOR HOLD DOWN, IF REQUIRED (COORDINATE WITH TANK SUPPLIER). CONTRACTOR IS RESPONSIBLE FOR ALL COORDINATION WITH TANK SUPPLIER (SELECTED BY OWNER).
6. BID ALTERNATE FOR SANITARY PIPE TUNNELING UNDER THE BUILDING IN LIEU OF TRENCHING & UNDERPINNING – SEE SPECIFICATIONS.

LEGEND

S	– SANITARY SEWER PIPELINE
Ⓢ	– SANITARY SEWER MANHOLE
W	– WATER PIPE
FP	– FIRE PROTECTION PIPE
G	– PROPANE TANK PIPE
CTV	– TELECOMMUNICATIONS DUCT BANK
UGE	– UNDERGROUND ELECTRIC DUCT BANK
TF	– TOP OF FRAME
FL	– FLOW LINE
I	– INVERT
SMH	– SANITARY MANHOLE
LG	– PROPANE

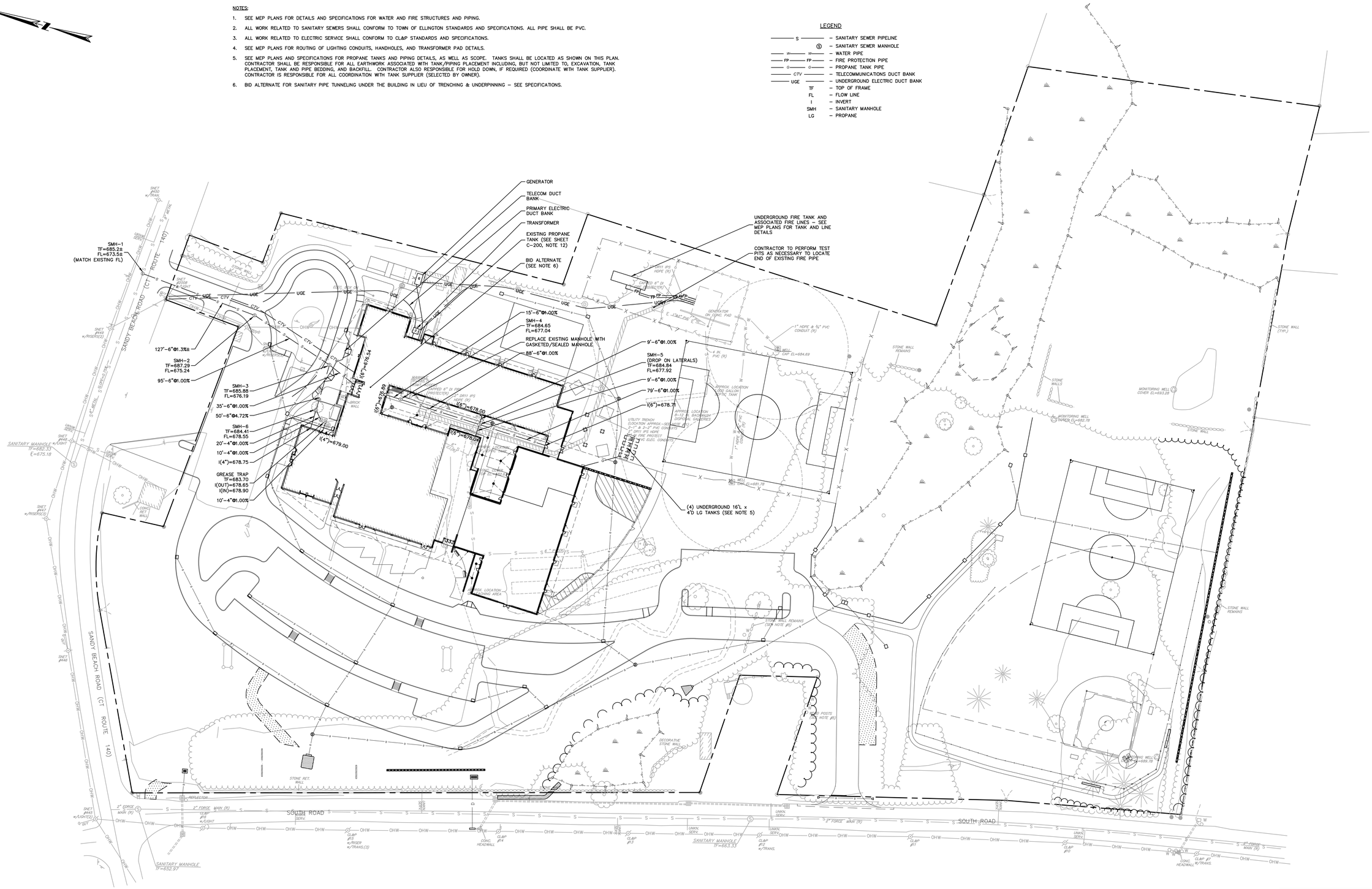

BSC GROUP
180 Glastonbury Boulevard
Suite 103
Glastonbury, Connecticut 06033
860 652 8227

Project Title:
Expansion and Renovate as New Project - PHASE 1 of 3
Crystal Lake Elementary School
284 Sandy Beach Road
Ellington, Connecticut 06029

SILVER / PETRUCELLI + ASSOCIATES
Architects / Engineers / Interior Designers
3190 Whitney Avenue, Hamden, CT 06518-2340
Tel. 203 230 9007 Fax. 203 230 8247
silverpetrucelli.com

Revision:	Description:	Date:	Revised By:
--	ISSUED FOR BIDDING	NOV 26, 2013	--

Drawing Title:
Utility Plan
State Project Number 048-0058 EA/RR/PS

Date: JUNE 18, 2013
Scale: 1"=40'
Drawn By: FJV
Project Number: 12.140
Drawing Number: C-500

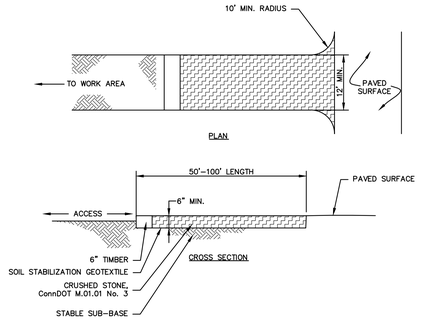

GENERAL NOTES

1. REMOVE TOPSOIL AND ORGANICS PRIOR TO CRUSHED STONE PLACEMENT.
2. INSTALL SUB-BASE OF FREE DRAINING BACKFILL BENEATH STABILIZATION GEOTEXTILE AS NECESSARY ON UNSTABLE SOILS.

1 CONSTRUCTION ENTRANCE

SCALE: NONE

EC-101-CT

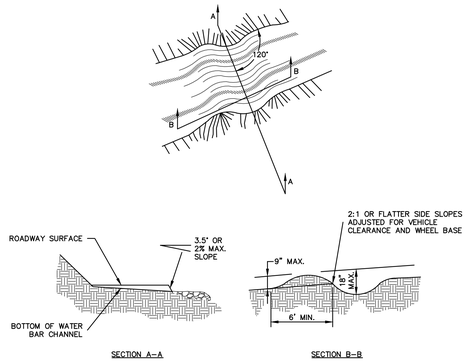

2 WATER BAR

SCALE: NONE

EC-102-CT

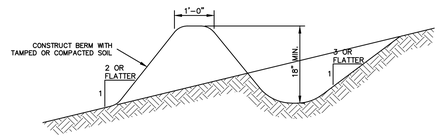

GENERAL NOTES

1. INSTALL TEMPORARY DIVERSION SWALES TO CHANNEL WATER FROM DISTURBED AREAS TO THE TEMPORARY SEDIMENT BASIN. ADJUST SWALE LOCATIONS AS NECESSARY PER CHANGING SITE CONDITIONS.
2. CONTRIBUTING DRAINAGE AREA MUST NOT EXCEED ONE ACRE.

3 TEMPORARY DIVERSION SWALE

SCALE: NONE

EC-103-CT

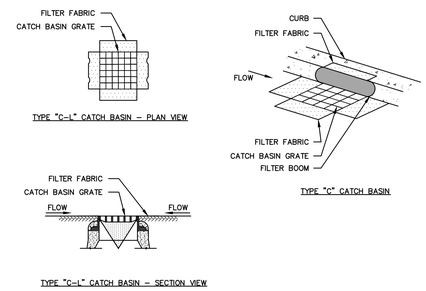

GENERAL NOTES

1. PROVIDE INLET PROTECTION TO ALL EXISTING CATCH BASINS IN THE VICINITY OF CONSTRUCTION. PROTECT NEW CATCH BASINS AS THEY ARE CONSTRUCTED.
2. GRATE TO BE PLACED OVER FILTER FABRIC.

4 CATCH BASIN FILTER SACK

SCALE: NONE

EC-104-CT

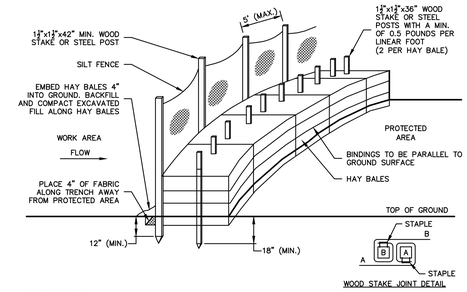

GENERAL NOTES

1. HAY BALES SHALL BE MADE OF HAY OR STRAW WITH 40 POUND MIN. WEIGHT AND 120 POUND MAX. WEIGHT HELD TOGETHER BY TWINE OR WIRE.
2. PLACE HAY BALES ON CONTOUR AND WING THE LAST HAY BALES UP SLOPE SO THAT THE TOP OF THE LAST SEVERAL HAY BALES ARE HIGHER THAN THE LINE OF HAY BALES.
3. DRIVE FIRST STAKE IN EACH BALE TOWARD THE PREVIOUSLY LAID BALE TO FORCE THEM TOGETHER.
4. PUT ONE HAY BALE PERPENDICULAR ALONG HAY BALE BARRIER EVERY 100 FEET.

5 HAY BALE BARRIER & SILT FENCE

SCALE: NONE

EC-105-CT

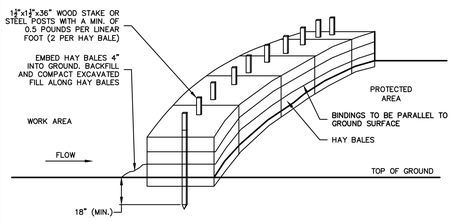

GENERAL NOTES

1. HAY BALES SHALL BE MADE OF HAY OR STRAW WITH 40 POUND MIN. WEIGHT AND 120 POUND MAX. WEIGHT HELD TOGETHER BY TWINE OR WIRE.
2. PLACE HAY BALES ON CONTOUR AND WING THE LAST HAY BALES UP SLOPE SO THAT THE TOP OF THE LAST SEVERAL HAY BALES ARE HIGHER THAN THE LINE OF HAY BALES.
3. DRIVE FIRST STAKE IN EACH BALE TOWARD THE PREVIOUSLY LAID BALE TO FORCE THEM TOGETHER.
4. PUT ONE HAY BALE PERPENDICULAR ALONG HAY BALE BARRIER EVERY 100 FEET.

6 HAY BALE BARRIER

SCALE: NONE

EC-106-CT

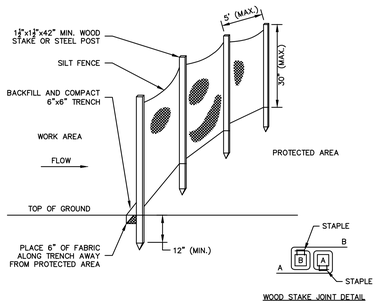

GENERAL NOTES

1. FOR SLOPE & SWALE INSTALLATIONS, EXTEND FENCE OP SLOPE SUCH THAT BOTTOM ENDS OF FENCE WILL BE HIGHER THAN THE TOP OF THE LOWEST PORTION OF FENCE.
2. FOR FENCE INSTALLED ON LEVEL TERRAIN INSTALL WING SECTIONS PERPENDICULAR TO MAIN BARRIER AT 50'-100' INTERVALS.

7 SILT FENCE BARRIER

SCALE: NONE

EC-107

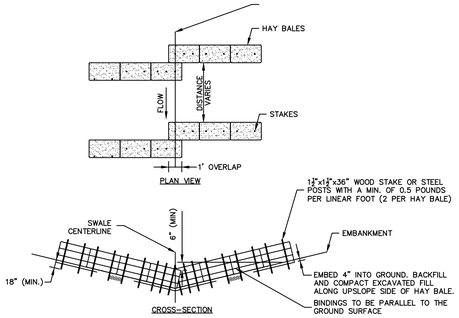

GENERAL NOTES

1. THIS CHECK DAM SHALL BE INSTALLED IN A DRAINAGE SWALE WITH BED WIDTHS OF 2 FEET OR LESS.
2. THE DISTANCE BETWEEN HAY BALE CHECK DAMS SHALL BE DETERMINED BY THE SLOPE OF THE SWALE. CHECK DAMS SHALL BE SET AT EVERY 2 FOOT DROP IN SWALE ELEVATION.
3. INSTALL 3 STAKES PER HAY BALE IN THE (2) TWO CENTER HAY BALES WITHIN SWALE BED AREAS.

8 HAY BALE CHECK DAM (NARROW SWALE)

SCALE: NONE

EC-110-CT

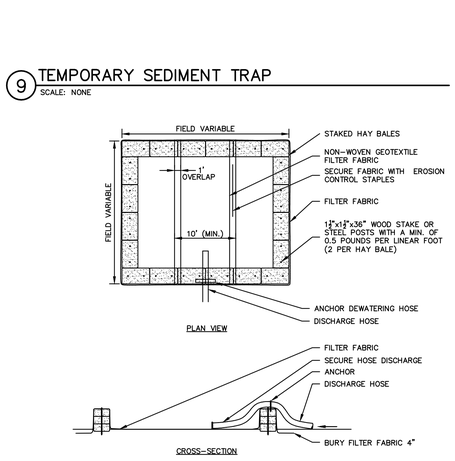

GENERAL NOTES

1. STABILIZE EARTHEN EMBANKMENT BY SEEDING OR PROVIDE STONE SLOPE PROTECTION IMMEDIATELY AFTER INSTALLATION.
2. NON-OVERFLOW PORTIONS AND ABUTMENTS OF TEMPORARY SEDIMENT TRAPS MAY BE CONSTRUCTED OF COMPACTED EARTHFILL.

9 TEMPORARY SEDIMENT TRAP

SCALE: NONE

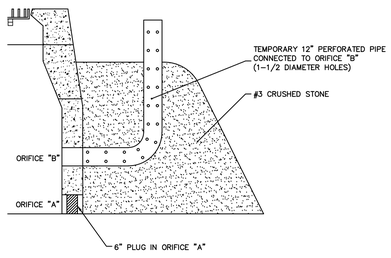

10 TEMPORARY SEDIMENT TRAP PIPED OUTLET

SCALE: NONE

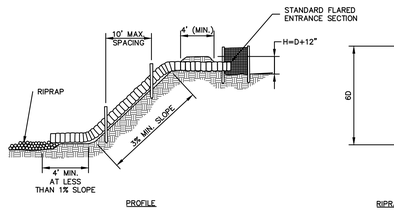

GENERAL NOTES

1. THE PIPE SLOPE DRAIN SHALL HAVE A SLOPE OF 3% OR STEEPER.
2. TOP OF THE EARTH DIKE OVER THE INLET PIPE AND ALL DIKE CARRYING WATER TO THE PIPE SHALL BE AT LEAST (1) ONE FOOT HIGHER THAN THE TOP OF THE PIPE.
3. ADD 0.3 FOOT TO DIKE HEIGHT FOR SETTLEMENT.
4. SOIL AROUND AND UNDER THE SLOPE PIPE SHALL BE HAND TEMPERED IN 4-INCH LIFTS.
5. THE PIPE SHALL BE PLASTIC OR CORRUGATED METAL PIPE WITH WATERTIGHT 12-INCH WIDE CONNECTING BANDS OR FLANGE CONNECTIONS.
6. PIPE ANCHORS TO BE PLACED AT 10-FOOT MAXIMUM SPACING.
7. RIPRAP TO BE (6) SIX INCHES IN A LAYER AT LEAST 12 INCHES THICKNESS AND PRESSED INTO THE SOIL.
8. PERIODIC INSPECTION AND REQUIRED MAINTENANCE MUST BE PROVIDED AFTER EACH RAIN EVENT.

11 TEMPORARY PIPE SLOPE DRAIN

SCALE: NONE

EC-115-CT

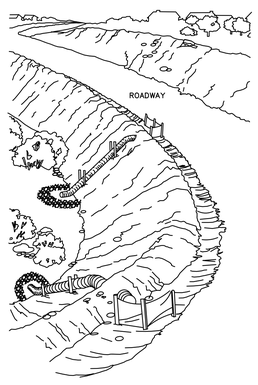

GENERAL NOTES

1. NUMBER OF BALES MAY VARY DEPENDING ON SITE CONDITIONS.
2. THE BASIN TO BE SIZED ACCORDING TO: CUBIC FEET OF STORAGE = PUMP DISCHARGE RATE(gpm) x 16.
3. SIZE SHOWN ON PLANS SHALL BE ADJUSTED AS REQUIRED FOR THE ACTUAL PUMPING RATE.

12 DEWATERING HAY BALE BASIN (TYPE 1)

SCALE: NONE

EC-114-CT

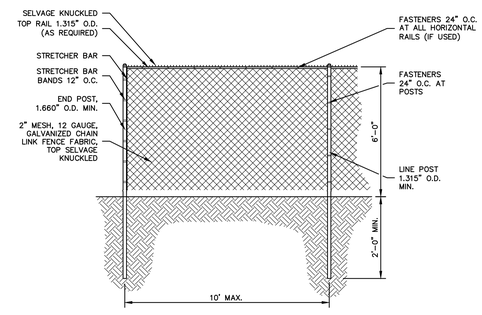

NOTE

1. PROVIDE CORNER POSTS, BRACES, TRUSS RODS AND OTHER COMPONENTS AS REQUIRED TO MAINTAIN STABILITY OF THE FENCE SYSTEM.

13 TEMPORARY CONSTRUCTION FENCE

SCALE: NONE

BSC GROUP
180 Glastonbury Boulevard
Suite 103
Glastonbury, Connecticut 06033
860 652 8227

Project Title:

Expansion and Renovate as New Project - PHASE 1 of 3

Crystal Lake Elementary School

284 Sandy Beach Road
Ellington, Connecticut 06029

SILVER / PETRUCELLI + ASSOCIATES
Architects / Engineers / Interior Designers
3190 Whitney Avenue, Hamden, CT 06518-2340
Tel. 203 230 9007 Fax. 203 230 8247
silverpetrucelli.com

Revision:	Description:	Date:	Revised By:
--	ISSUED FOR BIDDING	NOV 26, 2013	--

Drawing Title:

DETAILS

State Project Number 048-0058 EA/RR/PS

Date: JUNE 18, 2013
Scale: AS SHOWN
Drawn By: WGW
Project Number: 12.140

Drawing Number: C-600

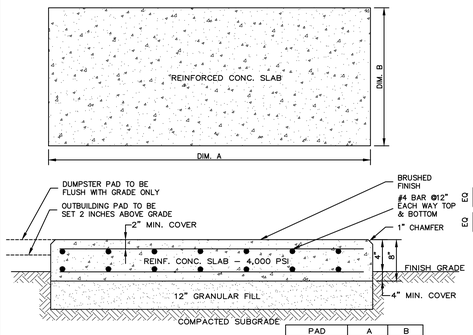

NOTE:
TRANSFORMER PAD – REFER TO MEP DRAWINGS

PAD	A	B
GENERATOR	12'–0"	5'–0"
DUMPSTER	14'–0"	7'–0"
OUTBUILDINGS	20'–6"	12'–6"

1 REINFORCED CONCRETE PAD
SCALE: NONE
PVT–107–CT

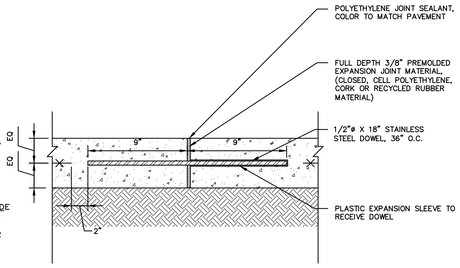

2 EXPANSION JOINT IN CONCRETE
SCALE: NONE
PVT–128–CT

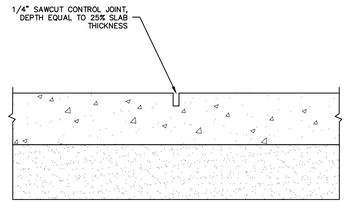

3 SAWCUT CONTROL JOINT
SCALE: NONE

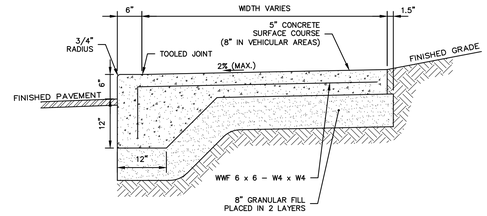

4 MONOLITHIC CONCRETE CURB & SIDEWALK
SCALE: NONE
SP–103a–CT

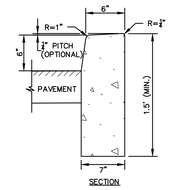

GENERAL NOTE

CURB LENGTHS SHALL CORRESPOND TO THE CONCRETE SIDEWALK TILE LENGTH, IF APPLICABLE. ½" EXPANSION JOINTS SHALL SEPARATE CURB SECTIONS.

5 6" CONCRETE CURB
SCALE: NONE

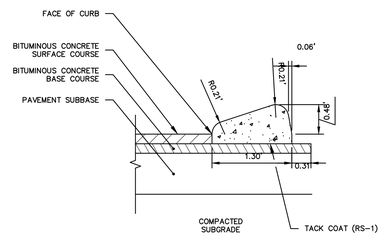

NOTE:

1. USE CONNDOT CLASS III BITUMINOUS CONCRETE FOR CURB.

6 12" BITUMINOUS CONCRETE "CAPE COD" CURB
SCALE: NONE
CRB–110–CT

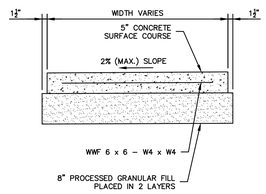

7 CONCRETE SIDEWALK
SCALE: NONE

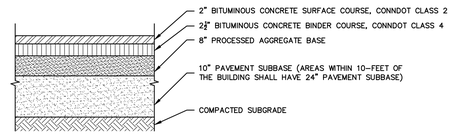

NOTE:

1. IN EXISTING PAVED AREAS THE TWO (2) LAYERS OF BITUMINOUS ASPHALT SHALL BE CONSTRUCTED OVER A BASE (10" MIN) OF IN–PLACE RECLAIMED MATERIAL.

8 BITUMINOUS CONCRETE PAVEMENT SECTION
SCALE: NONE

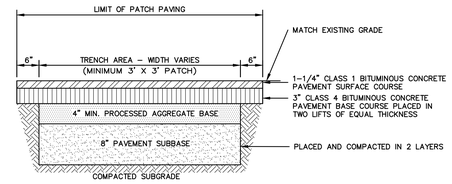

GENERAL NOTES

1. PAVEMENT TO BE SAW CUT
2. JOINT TO BE PROPERLY SEALED

9 PAVEMENT PATCH
SCALE: NONE

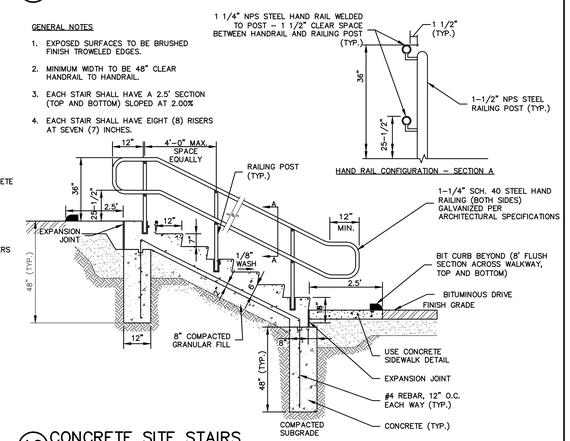

GENERAL NOTES

1. EXPOSED SURFACES TO BE BRUSHED FINISH TROWELED EDGES.
2. MINIMUM WIDTH TO BE 48" CLEAR HANDRAIL TO HANDRAIL.
3. EACH STAIR SHALL HAVE A 2.5' SECTION (TOP AND BOTTOM) SLOPED AT 2.00%
4. EACH STAIR SHALL HAVE EIGHT (8) RISERS AT SEVEN (7) INCHES.

10 CONCRETE SITE STAIRS
SCALE: NONE

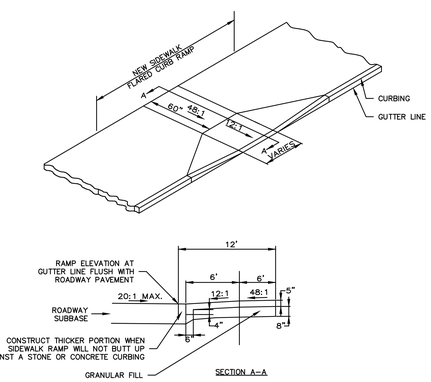

11 HANDICAP RAMP – TYPE 2A
SCALE: NONE

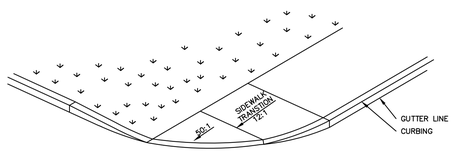

12 HANDICAP RAMP – TYPE 4D
SCALE: NONE

GENERAL NOTES

1. MAXIMUM SLOPES OF ADJOINING GUTTERS AND ROAD SURFACES IMMEDIATELY ADJACENT TO THE SIDEWALK RAMP OR ACCESSIBLE ROUTE SHOULD NOT EXCEED 20:1.
2. CARE SHALL BE TAKEN TO ASSURE UNIFORM GRADE ON THE RAMP, FREE OF SAGS AND ABRUPT GRADE CHANGES.
3. ALL RAMPS SHALL BE CONSTRUCTED OF CONCRETE SPECIFICED IN THE PROJECT SPECIFICATIONS.
4. SIDEWALK RAMPS SHALL HAVE A COARSE BROOM FINISH TRANSVERSE TO THE SLOPE OF THE RAMP. THE SURFACE ALONG ACCESSIBLE ROUTES SHALL BE STABLE, FIRM AND SLIP RESISTANT IN COMPLIANCE WITH ADA ACCESSIBILITY GUIDELINES SECTION 4.5.
5. DIAGONAL SIDEWALK RAMPS AT MARKED CROSSINGS SHALL BE WHOLLY CONTAINED WITHIN THE MARKINGS, EXCLUDING ANY FLARED SIDES.
6. REMOVAL OF EXISTING SIDEWALK FOR NEW RAMP INSTALLATIONS SHALL BE TO THE NEAREST EXPANSION/CONTRACTION JOINT OR DUMMY JOINT. 12:1 MAY NOT BE ACHIEVABLE DUE TO SIDEWALK GRADE. IN RECOGNITION OF THIS, A MINIMUM LIMIT OF 15' FOR A PARALLEL RAMP SHALL BE USED. REMOVAL SHALL NOT BE FURTHER THAN 2' FROM THE PROPOSED RAMP UNLESS DIRECTED BY THE ENGINEER.
7. EXPANSION JOINTS IN CONCRETE SHALL MATCH THOSE IN ADJACENT SIDEWALKS BUT IN NO CASE SHALL THE SPACING BETWEEN EXPANSION JOINTS EXCEED 12' UNLESS OTHERWISE NOTED.
8. RAISED ISLANDS IN MARKED CROSSINGS SHALL HAVE SIDEWALK RAMPS AT BOTH SIDES AND A LEVEL AREA AT LEAST 4' LONG BETWEEN THE RAMPS. IF THIS CAN NOT BE ACHIEVED, THE RAISED ISLAND SHALL BE CUT THROUGH LEVEL WITH THE ROADWAY AS SHOWN ON THE PLANS OR AS DIRECTED BY THE ENGINEER.
9. CURBING WITHIN THE LIMITS OF THE NEW SIDEWALK RAMP SHALL BE CONSTRUCTED IN CONFORMANCE WITH THE REQUIREMENTS OF CONNDOT SPECIFICATIONS FORM 816 SECTIONS 8.11 AND 8.13.
10. HANDICAP RAMPS CONFORMING WITH CONNECTICUT GENERAL STATUTES, SEC. 7–118a, SHALL BE INCORPORATED IN ALL PROPOSED SIDEWALKS AT ALL STREET INTERSECTIONS, AND AT ALL OTHER LOCATIONS WHERE THE GRADE OF A DRIVEWAY OR OTHER FACILITY TAKES PRECEDENCE OVER THE GRADE OF THE PROPOSED SIDEWALK.
11. TRANSITION TO FULL HEIGHT CURB. INSTALL STONE CURBING IF ADJACENT CURBING IS STONE. INSTALL CONCRETE CURBING IF ADJACENT CURBING IS CONCRETE OR BITUMINOUS.

13 SIDEWALK RAMP NOTES
SCALE: NONE
HC–109–CT

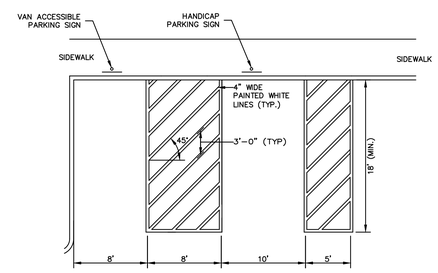

GENERAL NOTES

1. GRADING WITHIN HANDICAP SPACES SHALL BE 2.00% MAX. IN ALL DIRECTIONS
2. SIGN LOCATION VARIES – SEE PLAN

14 ACCESSIBLE PARKING SPACES
SCALE: NONE
HC–110–CT

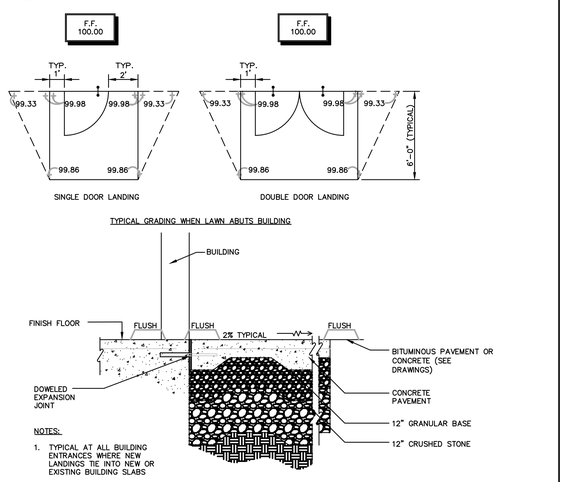

NOTES:

1. TYPICAL AT ALL BUILDING ENTRANCES WHERE NEW LANDINGS TIE INTO NEW OR EXISTING BUILDING SLABS

15 FLUSH HANDICAP ACCESSIBLE ENTRANCES
SCALE:
N.T.S

BSC GROUP
180 Glastonbury Boulevard
Suite 103
Glastonbury, Connecticut 06033
860 652 8227

Project Title:

Expansion and Renovate as New Project - PHASE 1 of 3

Crystal Lake Elementary School

284 Sandy Beach Road
Ellington, Connecticut 06029

SILVER / PETRUCELLI + ASSOCIATES
Architects / Engineers / Interior Designers

3190 Whitney Avenue, Hamden, CT 06518-2340
Tel. 203 230 9007 Fax. 203 230 8247
silverpetrucelli.com

Revision:	Description:	Date:	Revised By:
--	ISSUED FOR BIDDING	NOV 26, 2013	--

Drawing Title:

DETAILS

State Project Number 048-0058 EA/RR/PS

Date: JUNE 18, 2013
Scale: AS SHOWN
Drawn By: WGW
Project Number: 12.140

Drawing Number: C-601

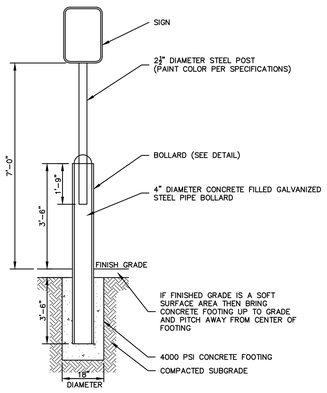

1 BOLLARD/MOUNTED SIGN
SCALE: NONE

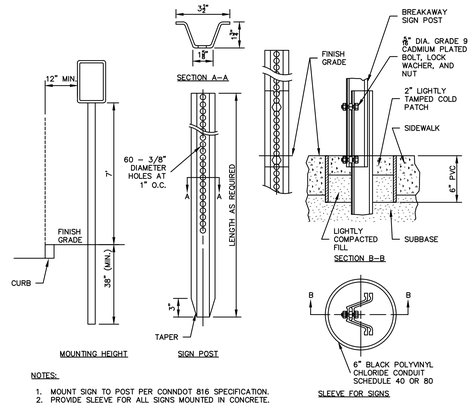

NOTES:
1. MOUNT SIGN TO POST PER CONNDOT 816 SPECIFICATION.
2. PROVIDE SLEEVE FOR ALL SIGNS MOUNTED IN CONCRETE.

2 TYPICAL SIGN SUPPORT – BREAKAWAY TYPE II
SCALE: NONE
FSN–116–CT

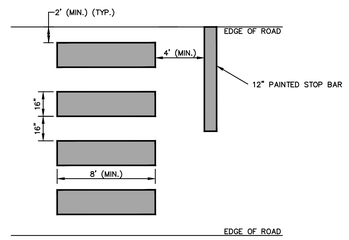

3 CROSSWALK
SCALE: NONE

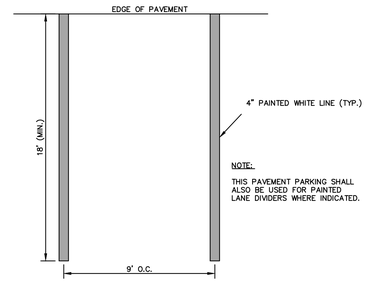

NOTE:
THIS PAVEMENT PARKING SHALL ALSO BE USED FOR PAINTED LANE DIVIDERS WHERE INDICATED.

4 STANDARD PAINTED PARKING MARKINGS
SCALE: NONE

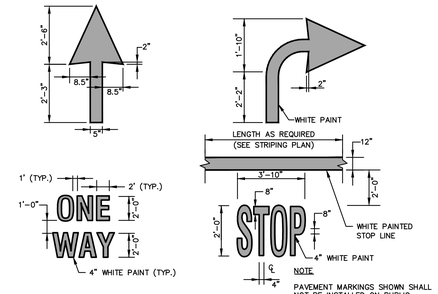

NOTE
PAVEMENT MARKINGS SHOWN SHALL NOT BE INSTALLED ON PUBLIC ROADWAYS.

5 PAINTED PAVEMENT MARKINGS
SCALE: NONE

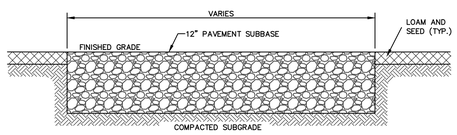

6 GRAVEL ACCESS DRIVE AND PARKING
SCALE: NONE

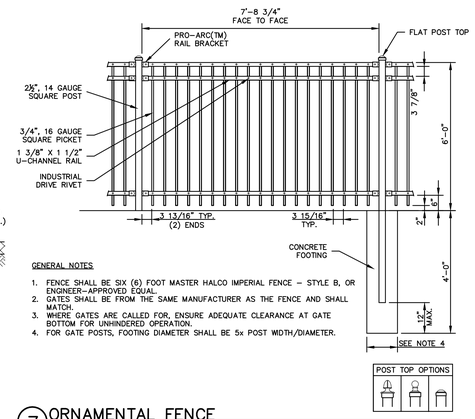

GENERAL NOTES
1. FENCE SHALL BE SIX (6) FOOT MASTER HALCO IMPERIAL FENCE – STYLE B, OR ENGINEER–APPROVED EQUAL.
2. GATES SHALL BE FROM THE SAME MANUFACTURER AS THE FENCE AND SHALL MATCH.
3. WHERE GATES ARE CALLED FOR, ENSURE ADEQUATE CLEARANCE AT GATE BOTTOM FOR UNHINDERED OPERATION.
4. FOR GATE POSTS, FOOTING DIAMETER SHALL BE 5x POST WIDTH/DIAMETER.

7 ORNAMENTAL FENCE
SCALE: NONE
FSN–109–CT–R

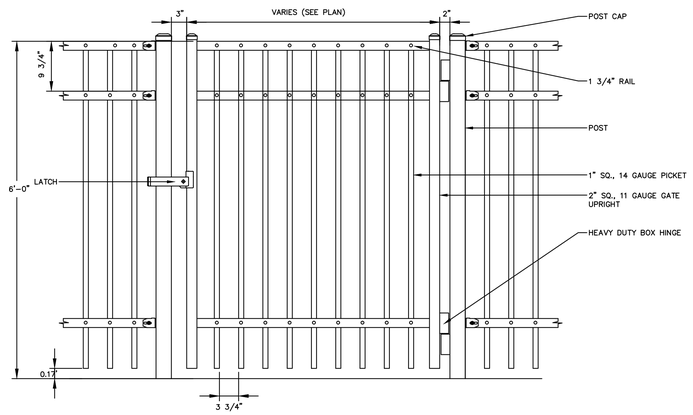

8 SINGLE ORNAMENTAL SWING GATE
SCALE: NONE

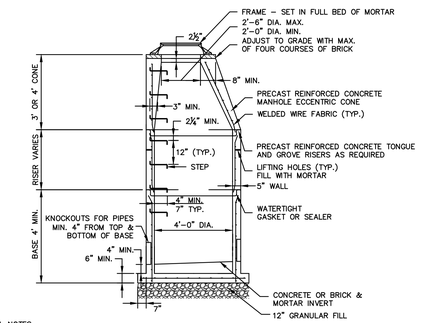

GENERAL NOTES
1. 5' OR 6' DIA. PRECAST BASES MAY BE USED WHEN REQUIRED DUE TO SIZE OR NUMBER OF PIPES AT THE MANHOLE. PRECAST REDUCERS WILL BE PLACED ABOVE THE 5' OR 6' BASES AS DIRECTED BY THE ENGINEER. WALL THICKNESS TO INCREASE 1" FOR EACH 1' OF INSIDE DIAMETER INCREASE.
2. FRAME DIAMETER OF 3'–3" WITH 4" FLANGE MUST BE USED WHEN THE TOP DIA. OF THE PRECAST CONE IS LESS THAN 3'–6". ALL OTHER FRAME DIMENSIONS ARE TO REMAIN THE SAME.
3. MINIMUM CONCRETE COMPRESSIVE STRENGTH OF F'c = 4000 PSI SHALL BE OBTAINED PRIOR TO SHIPPING.

9 STORM DRAINAGE MANHOLE
SCALE: NONE
STM–109–CT

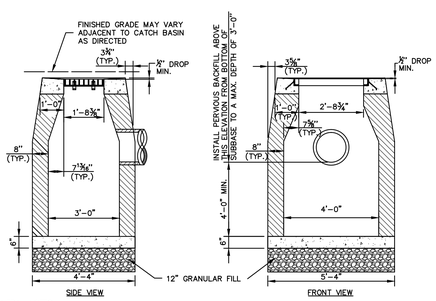

GENERAL NOTES
1. FRAME AND GRATE SHALL BE CONSTRUCTED PER SPECIFICATIONS.
2. ALL FACES OF STRUCTURES IN CONTACT WITH PAVEMENT SHALL BE COVERED WITH TAR PAPER OR APPROVED EQUAL.
3. TO CONVEY SUBSURFACE DRAINAGE, OPENINGS SHALL BE FORMED IN THE FOUR WALLS AT OR IMMEDIATELY ABOVE THE BOTTOM OF PERVIOUS BACKFILL.
4. WALL THICKNESS OF ALL CB'S OVER 10' DEEP SHALL BE INCREASED TO 12" THICK. INSIDE DIMENSION SHALL REMAIN THE SAME. (12" THICKNESS WILL START AFTER THE FIRST 10').
5. MINIMUM CONCRETE COMPRESSIVE STRENGTH OF F'c = 4000 PSI SHALL BE OBTAINED PRIOR TO SHIPPING.

10 TYPE "C–L" CATCH BASIN
SCALE: NONE
STM–102–CT

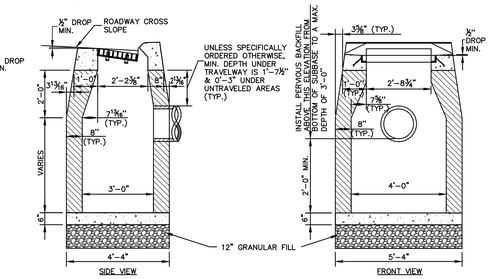

GENERAL NOTES
1. FRAME AND GRATE SHALL BE CONSTRUCTED PER SPECIFICATIONS.
2. ALL FACES OF STRUCTURES IN CONTACT WITH PAVEMENT SHALL BE COVERED WITH TAR PAPER OR APPROVED EQUAL.
3. TO CONVEY SUBSURFACE DRAINAGE, OPENINGS SHALL BE FORMED IN THE FOUR WALLS AT OR IMMEDIATELY ABOVE THE BOTTOM OF PERVIOUS BACKFILL.
4. WALL THICKNESS OF ALL CB'S OVER 10' DEEP SHALL BE INCREASED TO 12" THICK. INSIDE DIMENSION SHALL REMAIN THE SAME. (12" THICKNESS WILL START AFTER THE FIRST 10').
5. USE APPROPRIATE CONCRETE TOP FOR CURBING SHOWN ON PLANS, OR AS DIRECTED BY THE ENGINEER.
6. MINIMUM CONCRETE COMPRESSIVE STRENGTH OF F'c = 4000 PSI SHALL BE OBTAINED PRIOR TO SHIPPING.

11 TYPE "C" CATCH BASIN
SCALE: NONE
STM–101–CT

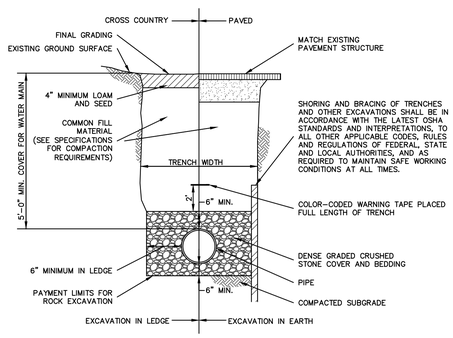

12 TYPICAL PIPE TRENCH SECTION
SCALE: NONE
UTY–103–CT

OUTLET CONTROL STRUCTURE	EL A	EL B	EL C	EL D (ORIF A)	DIAMETER ORIF A	EL E (ORIF B)	DIAMETER ORIF B (IN)	EL F	TOP OF BASIN	EL H OUTLET PIPE	DIAMETER OUTLET PIPE
1	648.98	649.48	652.00	652.00	6–INCH	653.25	10–INCH	655.00	656.30	649.52	12–INCH
2	651.46	651.96	652.00	652.00	6–INCH	653.00	18–INCH	655.00	656.30	652.00	18–INCH

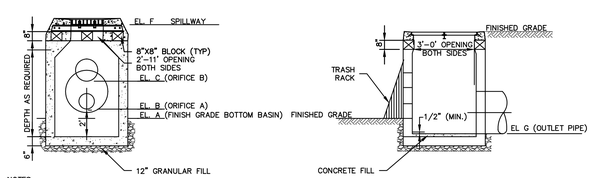

NOTES:
1. STANDARD "C–L" TYPE CATCH BASIN COMPONENTS (SINGLE "C–L" FOR OCS–1 AND DOUBLE "C–L" FOR OCS–2) ARE TO BE USED AS THE BASIS FOR THE OUTLET CONTROL STRUCTURE.
2. CONTRACTOR TO ANCHOR GRATE TO STRUCTURE TOP USING AT LEAST (4) STAINLESS STEEL BRACKETS BOLTED TO STRUCTURE AND THAT CAN BE REMOVED FOR REMOVAL OF GRATE AND CLEANING. CONTRACTOR SHALL SUBMIT SHOP DRAWING OF STRUCTURE AND PROPOSED ANCHORING METHOD TO ENGINEER FOR APPROVAL.
3. TYPE "C–L" GRATE AND FRAME ARE TO BE GALVANIZED WITH GALVANIZED LOCKING HARDWARE.

13 OUTLET CONTROL STRUCTURE
SCALE: NONE
SM–111–CT

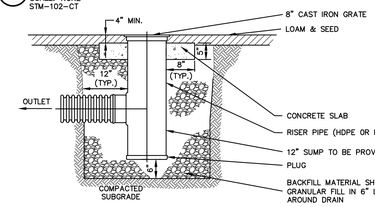

NOTES:
1. CONTRACTOR HAS THE OPTION OF USING AN ENGINEER–APPROVED MANUFACTURED AREA DRAIN.

14 AREA DRAIN
SCALE: NONE
STM–116–CT

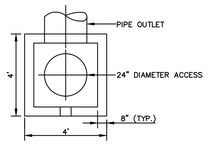

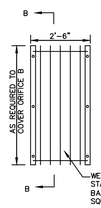

TRASH RACK DETAIL

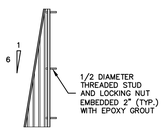

SECTION B–B

BSC GROUP
180 Glastonbury Boulevard
Suite 103
Glastonbury, Connecticut 06033
860 652 8227

Project Title:
Expansion and Renovate as New Project - PHASE 1 of 3
Crystal Lake Elementary School
284 Sandy Beach Road
Ellington, Connecticut 06029

SILVER / PETRUCELLI + ASSOCIATES
Architects / Engineers / Interior Designers
3190 Whitney Avenue, Hamden, CT 06518-2340
Tel. 203 230 9007 Fax. 203 230 8247
silverpetrucelli.com

Revision:	Description:	Date:	Revised By:
--	ISSUED FOR BIDDING	NOV 26, 2013	--

Drawing Title:
DETAILS
State Project Number 048-0058 EA/RR/PS

Date: JUNE 18, 2013
Scale: AS SHOWN
Drawn By: WGW
Project Number: 12.140
Drawing Number: C-602

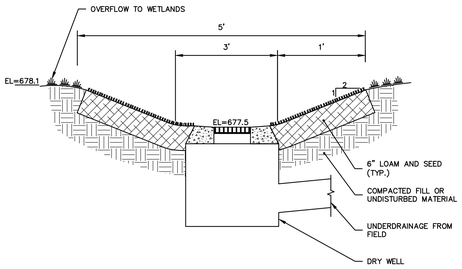

1 GRASS LEVEL SPREADER
SCALE: NONE

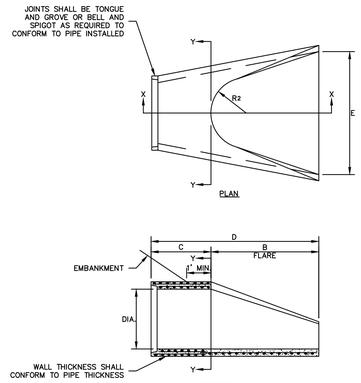

DIMENSIONS FOR REINFORCED CONCRETE CULVERT END									FLARE REINFORCEMENT ONE LAYER ONLY IN CENTER OF WALL	
DIA.	A	B	C	D	E	F	R1	R2	MIN. AREA OF LONG. STEEL SQ. IN. PER FT.	MIN. AREA OF TRANS. STEEL SQ. IN. PER FT.
12"	4"	2'–0"	4'–0⅜"	6'–0⅜"	2'–0"	1'–7 15/16"	10¾"	9"	0.048	0.048
15"	6"	2'–3"	3'–10"	6'–1"	2'–6"	2'–0⅝"	1'–0½"	11"	0.054	0.054
18"	9"	2'–3"	3'–10"	6'–1"	3'–0"	2'–5"	1'–3½"	1'–0"	0.060	0.060
21"	9"	2'–11"	3'–2"	6'–1"	3'–6"	2'–7½"	1'–4"	1'–1"	0.066	0.066
24"	9½"	3'–7½"	2'–6"	6'–1½"	4'–0"	2'–9⅜"	1'–4 13/16"	1'–2"	0.072	0.072
30"	1'–0"	4'–6"	1'–7¾"	6'–1¾"	5'–0"	3'–1"	1'–6½"	1'–3"	0.084	0.084
36"	1'–3"	5'–3"	2'–10¾"	8'–1¾"	6'–0"	3'–11 3/16"	2'–0⅝"	1'–8"	0.096	0.096
42"	1'–9"	5'–3"	2'–11"	8'–2"	6'–6"	4'–5¼"	2'–3½"	1'–10"	0.108	0.108
48"	2'–0"	6'–0"	2'–2"	8'–2"	7'–0"	4'–8½"	2'–4½"	1'–10"	0.120	0.120
54"	2'–3"	5'–5"	2'–11"	8'–4"	7'–6"	5'–5½"	2'–9⅜"	2'–0"	0.132	0.132
60"	2'–9"	5'–0"	3'–3"	8'–3"	8'–0"	6'–0⅜"	3'–0 13/16"	2'–0"	0.144	0.144

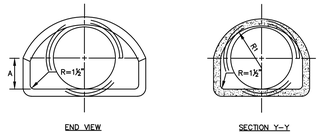

2 REINFORCED CONCRETE CULVERT END
SCALE: NONE

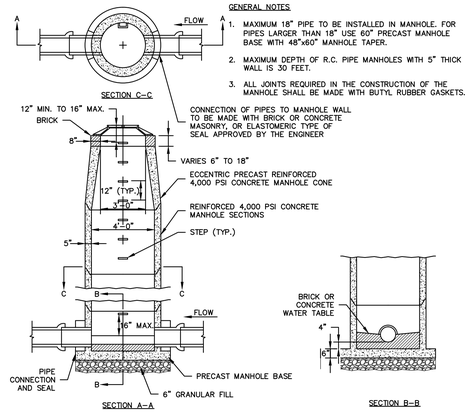

GENERAL NOTES

1. MAXIMUM 18" PIPE TO BE INSTALLED IN MANHOLE. FOR PIPES LARGER THAN 18" USE 60" PRECAST MANHOLE BASE WITH 48"x60" MANHOLE TAPER.
2. MAXIMUM DEPTH OF R.C. PIPE MANHOLES WITH 5" THICK WALL IS 30 FEET.
3. ALL JOINTS REQUIRED IN THE CONSTRUCTION OF THE MANHOLE SHALL BE MADE WITH BUTYL RUBBER GASKETS.
4. CONNECTION OF PIPES TO MANHOLE WALL TO BE MADE WITH BRICK OR CONCRETE MASONRY, OR ELASTOMERIC TYPE OF SEAL APPROVED BY THE ENGINEER

3 PRECAST SANITARY SEWER MANHOLE
SCALE: NONE

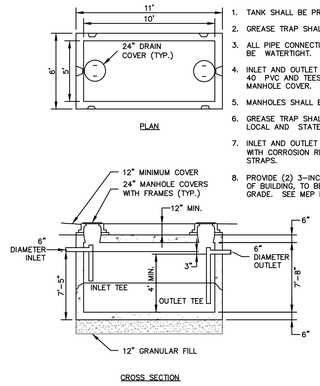

GENERAL NOTES

1. TANK SHALL BE PRECAST CONCRETE.
2. GREASE TRAP SHALL WITHSTAND HS–20 LOADING.
3. ALL PIPE CONNECTIONS AND CONCRETE JOINTS SHALL BE WATERTIGHT.
4. INLET AND OUTLET TEES TO BE CAST IRON OR SCHED. 40 PVC AND TEES TO BE ACCESSIBLE UNDER MANHOLE COVER.
5. MANHOLES SHALL BE BROUGHT TO FINISHED GRADE.
6. GREASE TRAP SHALL MEET ALL REQUIREMENTS OF LOCAL AND STATE HEALTH AND BUILDING CODES.
7. INLET AND OUTLET TEES TO BE PROPERLY SUPPORTED WITH CORROSION RESISTANT HANGERS AND/OR STRAPS.
8. PROVIDE (2) 3–INCH VENT PIPES FROM TANK TO SIDE OF BUILDING, TO BE VENTED AT LEAST 8–FEET ABOVE GRADE. SEE MEP PLANS FOR VENT PIPE LOCATIONS.

4 GREASE TRAP (2,500 GALLON)
SCALE: NONE

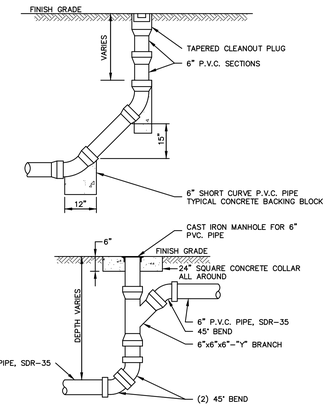

5 CLEANOUT
SCALE: NONE

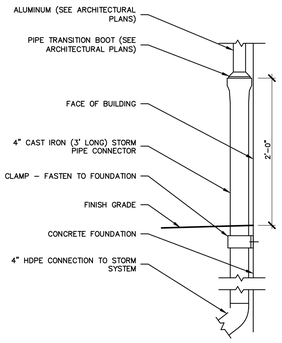

13 ROOF LEADER BOOT CONNECTION
SCALE: NONE

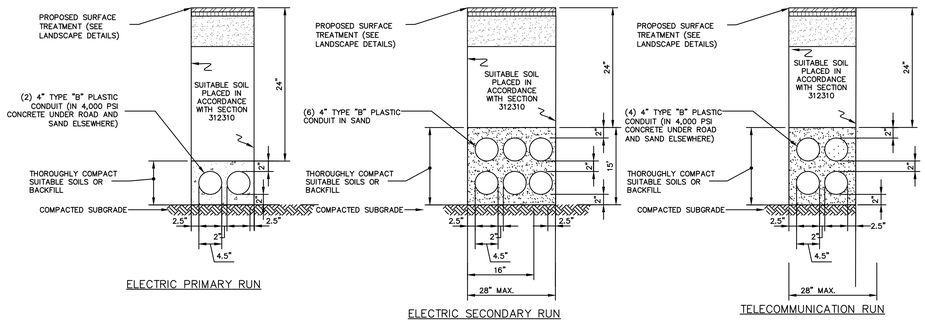

GENERAL NOTES:

1. DUCT BANK TO BE BACKFILLED WITH SUITABLE SOILS.
2. ALL DUCTS TO COMPLY WITH CUDS NE–1.
3. MINIMUM 210# TENSILE STRENGTH PULL LINES TO BE INSTALLED IN ALL DUCTS BY THE CONTRACTOR. PULL LINES SHALL BE GREENLEE CATALOG #430, PART #5021481.0 OR EQUAL.

6 DUCT BANKS
SCALE: NONE

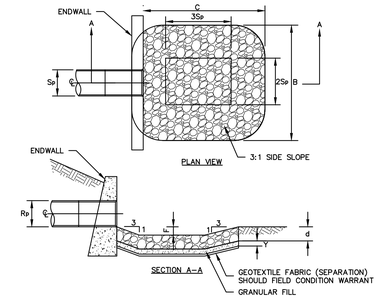

LEGEND

Sp = { MAX. INSIDE PIPE SPAN (NON–CIRCULAR SECTIONS) / INSIDE PIPE DIAMETER (CIRCULAR SECTIONS)
Rp = { MAX. INSIDE PIPE RISE (NON–CIRCULAR SECTIONS) / INSIDE PIPE DIAMETER (CIRCULAR SECTIONS)
d = { 12" – MODIFIED RIPRAP / 18" – INTERMEDIATE RIPRAP / 36" – STANDARD RIPRAP

OUTLET ID	d	F	C	B	Y	RIPRAP TYPE
EW 2–1	18"	18"	13.5'	12'	6"	INTERMEDIATE

7 PREFORMED SCOUR HOLE – TYPE 2
SCALE: NONE

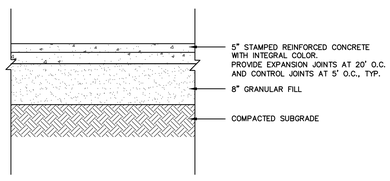

8 STAMPED CONCRETE WITH INTEGRAL COLOR
SCALE: NONE

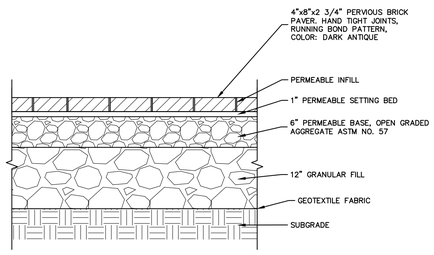

9 PERVIOUS BRICK PAVERS
SCALE: NONE

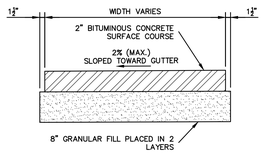

10 BITUMINOUS CONCRETE SIDEWALK
SCALE: NONE

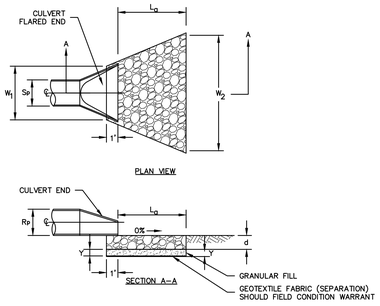

LEGEND

Sp = { MAX. INSIDE PIPE SPAN (NON–CIRCULAR SECTIONS) / INSIDE PIPE DIAMETER (CIRCULAR SECTIONS)
Rp = { MAX. INSIDE PIPE RISE (NON–CIRCULAR SECTIONS) / INSIDE PIPE DIAMETER (CIRCULAR SECTIONS)
La = { LENGTH OF RIPRAP MEASURED FROM THE END OF THE CULVERT END SECTION.
d = { 12" – MODIFIED RIPRAP / 18" – INTERMEDIATE RIPRAP / 36" – STANDARD RIPRAP

OUTLET ID	d	W_1	W_2	L_a	Y	RIPRAP TYPE
FE 3–1	18"	4'	11'	10'	6"	INTERMEDIATE

11 RIPRAP APRON – TYPE A
SCALE: NONE

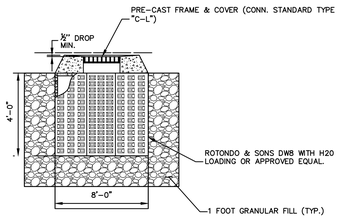

GENERAL NOTES

1. FRAME AND GRATE SHALL BE CONSTRUCTED PER SPECIFICATIONS.
2. MINIMUM CONCRETE COMPRESSIVE STRENGTH OF F'c = 4000 PSI SHALL BE OBTAINED PRIOR TO SHIPPING.

12 DRY WELL
SCALE: NONE

BSC GROUP
180 Glastonbury Boulevard
Suite 103
Glastonbury, Connecticut 06033
860 652 8227

Project Title:
Expansion and Renovate as New Project - PHASE 1 of 3
Crystal Lake Elementary School
284 Sandy Beach Road
Ellington, Connecticut 06029

SILVER / PETRUCELLI + ASSOCIATES
Architects / Engineers / Interior Designers
3190 Whitney Avenue, Hamden, CT 06518-2340
Tel. 203 230 9007 Fax. 203 230 8247
silverpetrucelli.com

Revision:	Description:	Date:	Revised By:
--	ISSUED FOR BIDDING	NOV 26, 2013	--

Drawing Title:
DETAILS
State Project Number 048-0058 EA/RR/PS

Date: JUNE 18, 2013
Scale: AS SHOWN
Drawn By: WGW
Project Number: 12.140
Drawing Number: C-603

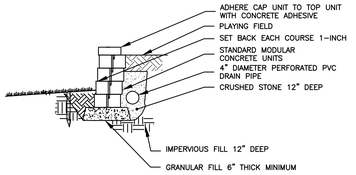

SECTION VIEW A–A
SCALE: 1/2" = 1'

NOTES:

1. MODULAR BLOCK RETAINING WALL SHALL BE VERSA-LOK, TYPE "STANDARD-WEATHERED", OR ENGINEER-APPROVED EQUAL.
2. ALL WORK ASSOCIATED WITH MODULAR BLOCK WALL, INCLUDING SHIPPING, STORAGE, CONSTRUCTION, AND INCIDENTALS, SHALL BE DONE PER THE MANUFACTURER'S RECOMMENDATIONS.
3. CONTRACTOR SHALL SUBMIT SHOP DRAWINGS AND SPECIFICATIONS OF A WALL SYSTEM, SIGNED AND SEALED BY A PROFESSIONAL ENGINEER REGISTERED IN THE STATE OF CONNECTICUT, FOR APPROVAL.

1 MODULAR BLOCK RETAINING WALL
SCALE: NONE

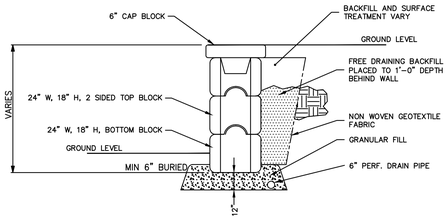

NOTES

1. MODULAR BLOCK WALL SHALL BE REDI-ROCK PRODUCT LINE, COBBLESTONE FACE MOLD OR APPROVED EQUAL.
2. INSTALL PER MANUFACTURER'S RECOMMENDATIONS.
3. A LEVELING PAD OF 3/4" CRUSHED STONE, 8" DEEP AND EXTENDING AT LEAST 12" BEYOND THE FRONT AND THE BACK OF THE BASE BLOCK, SHALL BE INSTALLED. A SURFACE TREATMENT OF TWO (2) COATS OF CHEMTEC ONE CONCRETE DENSIFIER SHALL BE APPLIED PER THE MANUFACTURER'S RECOMMENDATION. A MINIMUM SOIL BEARING CAPACITY OF 3000 PSF IS REQUIRED BENEATH THE LEVELING PAD.

2 GRAVITY RETAINING WALL (SOUTH OF FIELD)
SCALE: NONE

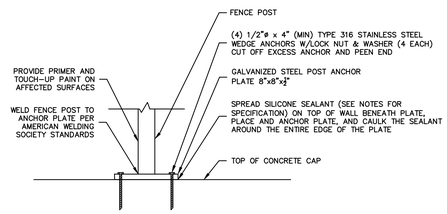

NOTES

1. WELDING AND ANCHORING SHALL CONFORM TO:
   - AMERICAN WELDING SOCIETY (AWS) AWS D1.1/D1.1M STRUCTURAL WELDING CODE – STEEL
   - ASTM A36 – STANDARD SPECIFICATION FOR CARBON STRUCTURAL STEEL
   - ASTM A123 – STANDARD SPECIFICATION FOR ZINC (HOT-DIP GALVANIZED) COATINGS ON IRON AND STEEL PRODUCTS
   - AST E488 – STANDARD TEST METHODS FOR STRENGTH OF ANCHORS IN CONCRETE AND MASONRY ELEMENTS
2. STANDARD/REGULAR HEXAGON-HEAD BOLTS AND NUTS SHALL CONFORM TO ASTM F568M, ASTM A307, GRADE A.
3. SEALANT USED BENEATH AND AROUND EDGES OF THE PLATE SHALL BE "DAP SILICONE PLUS PREMIUM SILICONE RUBBER CONCRETE AND MASONRY SEALANT."

3 FENCE POST MOUNTING ON WALL
SCALE: NONE
W-2-C1

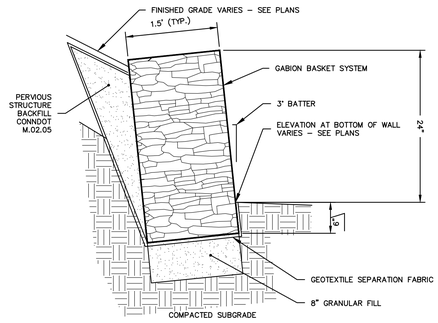

NOTES:

1. CONTRACTOR SHALL SUBMIT SAMPLE OF PROPOSED INFILL MATERIAL FOR APPROVAL.

4 GABION BASKET RETAINING WALL
SCALE: NONE

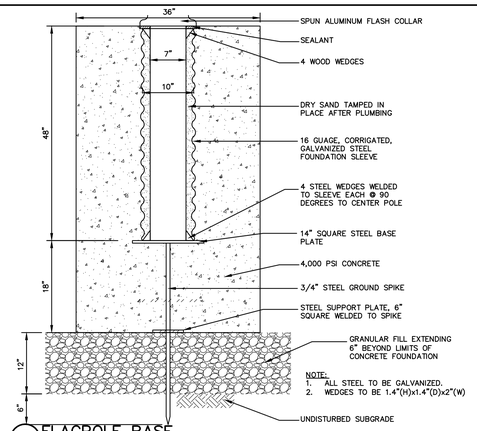

NOTE:
1. ALL STEEL TO BE GALVANIZED.
2. WEDGES TO BE 1.4"(H)x1.4"(D)x2"(W)

5 FLAGPOLE BASE
SCALE: NONE

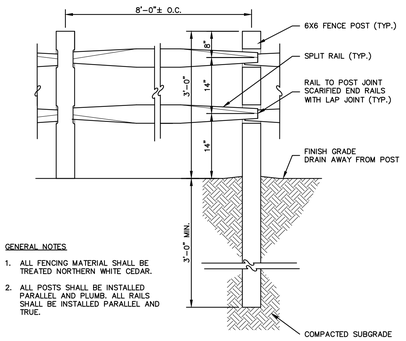

GENERAL NOTES

1. ALL FENCING MATERIAL SHALL BE TREATED NORTHERN WHITE CEDAR.
2. ALL POSTS SHALL BE INSTALLED PARALLEL AND PLUMB. ALL RAILS SHALL BE INSTALLED PARALLEL AND TRUE.

7 SPLIT RAIL FENCE
SCALE: NONE

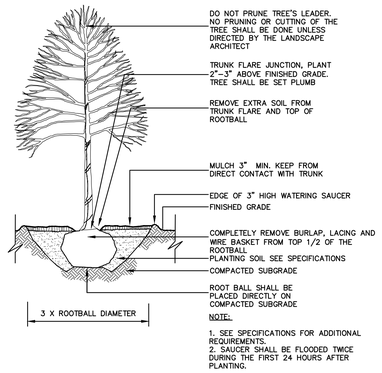

NOTE:

1. SEE SPECIFICATIONS FOR ADDITIONAL REQUIREMENTS.
2. SAUCER SHALL BE FLOODED TWICE DURING THE FIRST 24 HOURS AFTER PLANTING.

8 DECIDUOUS TREE PLANTING
SCALE: NONE

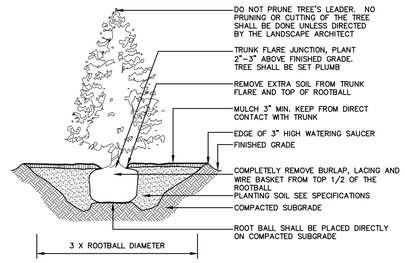

NOTE:

1. SEE SPECIFICATIONS FOR ADDITIONAL REQUIREMENTS.
2. SAUCER SHALL BE FLOODED TWICE DURING THE FIRST 24 HOURS AFTER PLANTING.

9 EVERGREEN TREE PLANTING
SCALE: NONE

NOTES:

1. SEE SPECIFICATIONS FOR ADDITIONAL REQUIREMENTS.
2. NO PRUNING OR CUTTING UNLESS DIRECTED BY THE LANDSCAPE ARCHITECT.
3. SAUCER SHALL BE FLOODED TWICE DURING THE FIRST 24 HOURS AFTER PLANTING.
4. SHRUBS SHALL BE SET PLUMB AND PLANTED SO THAT THE TOP OF THE ROOTBALL IS 1"-2" ABOVE FINISHED GRADE.

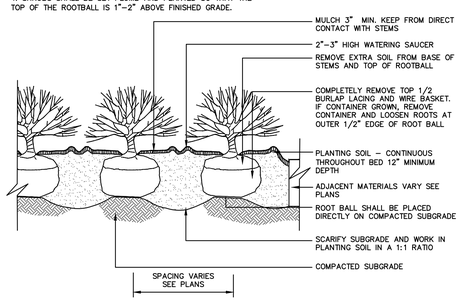

10 SHRUB PLANTING
SCALE: NONE

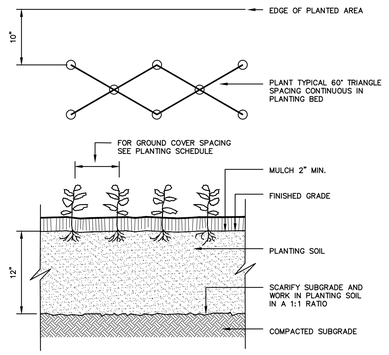

NOTE:
SEE SPECIFICATIONS FOR ADDITIONAL REQUIREMENTS

11 GROUNDCOVER PLANTING
SCALE: NONE

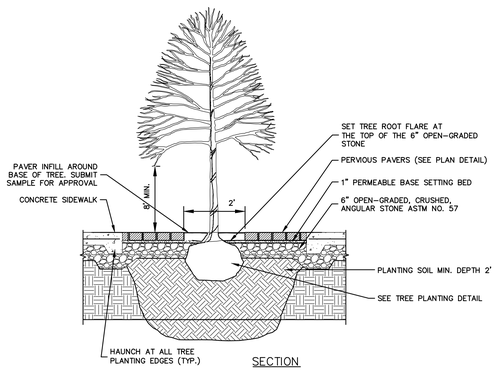

12 TREE PLANTING IN PERMEABLE PAVER
SCALE: NONE

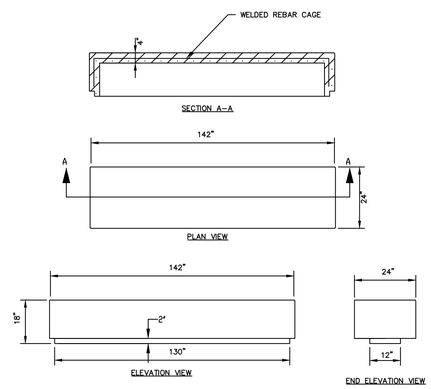

13 CONCRETE BENCH
SCALE: NONE

BSC GROUP
180 Glastonbury Boulevard
Suite 103
Glastonbury, Connecticut 06033
860 652 8227

Project Title:
Expansion and Renovate as New Project - PHASE 1 of 3
Crystal Lake Elementary School
284 Sandy Beach Road
Ellington, Connecticut 06029

SILVER / PETRUCELLI + ASSOCIATES
Architects / Engineers / Interior Designers
3190 Whitney Avenue, Hamden, CT 06518-2340
Tel. 203 230 9007 Fax. 203 230 8247
silverpetrucelli.com

Revision:	Description:	Date:	Revised By:
--	ISSUED FOR BIDDING	NOV 26, 2013	--

Drawing Title:
DETAILS
State Project Number 048-0058 EA/RR/PS

Date: JUNE 18, 2013
Scale: AS SHOWN
Drawn By: WGW
Project Number: 12.140

Drawing Number: C-604

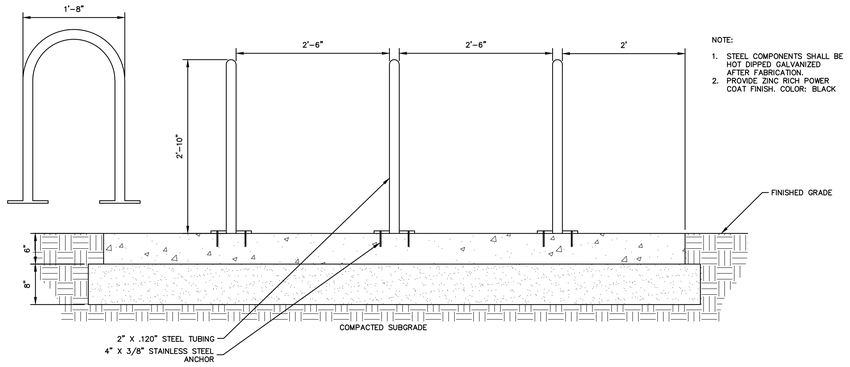

NOTE:

1. STEEL COMPONENTS SHALL BE HOT DIPPED GALVANIZED AFTER FABRICATION.
2. PROVIDE ZINC RICH POWER COAT FINISH. COLOR: BLACK

1 SURFACE MOUNTED BICYCLE RACKS
SCALE: 1 1/2"=1'-0"

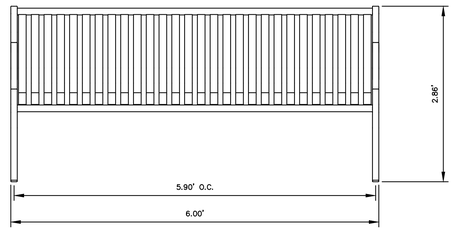

FRONT VIEW

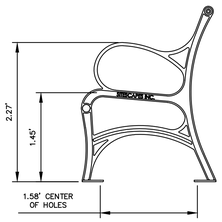

SIDE VIEW

2 METAL BENCH
SCALE: NONE

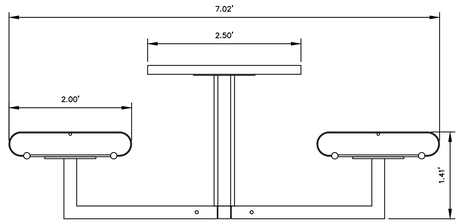

3 TABLE WITH SEATS
SCALE: NONE

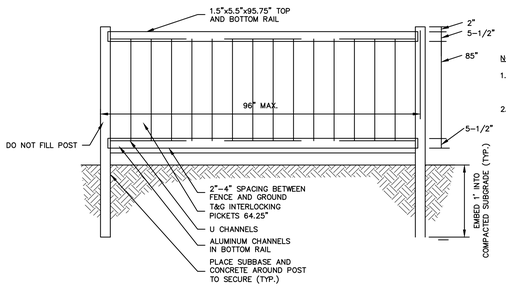

NOTES:

1. FENCE SHALL BE "THE SAVANNAH PRIVACY FENCE" AS MANUFACTURED BY USA VINYL FENCE COMPANY OR ENGINNER-APPROVED EQUAL.
2. COLOR SHALL BE TAN. SUBMIT CONFIGURING COLOR SAMPLE FOR APPROVAL.

4 8' VINYL PRIVACY FENCE
SCALE: NONE

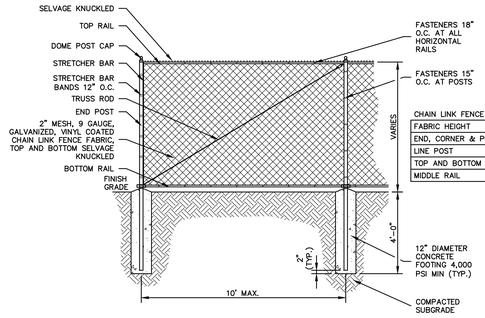

CHAIN LINK FENCE FRAMEWORK SCHEDULE

FABRIC HEIGHT	6' OR LESS	6' – 10'	10' OR MORE
END, CORNER & PULL POST	2.375" O.D.	2.875" O.D.	4" O.D.
LINE POST	1.900" O.D.	2.375" O.D.	2.875" O.D.
TOP AND BOTTOM RAIL	1.660" O.D.	1.660" O.D.	1.660" O.D.
MIDDLE RAIL	NONE	1.660" O.D.	1.660" O.D.

5 VINYL COATED CHAIN LINK FENCE
SCALE: NONE

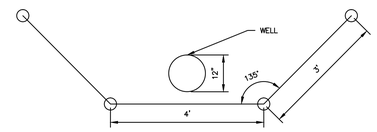

VINYL COATED CHAIN LINK FENCE AT WELL

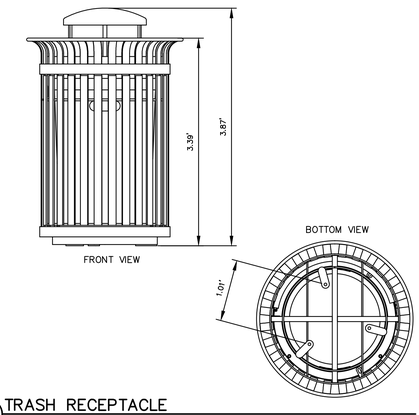

6 TRASH RECEPTACLE
SCALE: NONE

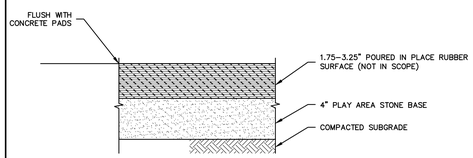

NOTES

1. THE DEPTH BELOW FINISH GRADE WILL VARY BETWEEN 1.75" AND 3.25" DEPENDING ON THE FINAL PLAY EQUIPMENT DESIGN LOCATION. FOR BID PURPOSES, ASSUME 2.5". CONTRACTOR SHALL SHAPE PLAY AREA STONE BASE, AS REQUIRED. A PLAY AREA MICROGRADING PLAN WILL BE PROVIDED FOR MICROGRADING.

7 2-5 PLAY AREA BASE
SCALE: NONE

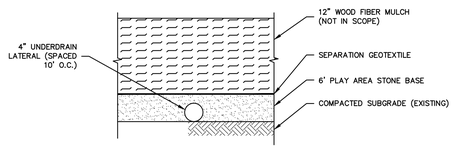

NOTES

1. CONTRACTOR RESPONSIBLE FOR GEOTEXTILE, PLAY AREA STONE BASE, AND SUB-DRAINAGE. FOR PRICING, ASSUME 4" DIAMETER SLOTTED HDPE UNDERDRAINAGE, SPACED 1' ON CENTER, AS WELL AS A COLLECTOR PIPE. AN UNDERDRAINAGE PLAN WILL BE PROVIDED ONCE THE PLAY EQUIPMENT DESIGN IS FINALIZED.

8 5-12 PLAY AREA BASE
SCALE: NONE

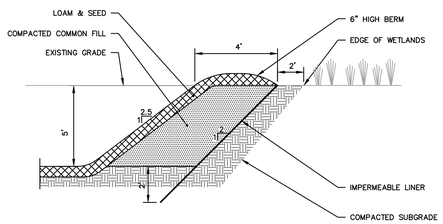

GENERAL NOTES

1. IMPERMEABLE LINER SHALL BE DURA-SKRIM K30B (REINFORCED POLYETHYLENE), AS MANUFACTURED BY RAVEN INDUSTRIES, OR ENGINEER-APPROVED EQUAL.

9 DETENTION BASIN BERM SECTION ADJACENT WETLANDS
SCALE: NONE
SM-103-CT

NOTE:

1. CONTRACTOR SHALL PROVIDE SAMPLES OF MATERIALS FOR APPROVAL PRIOR TO THE START OF CONSTRUCTION.

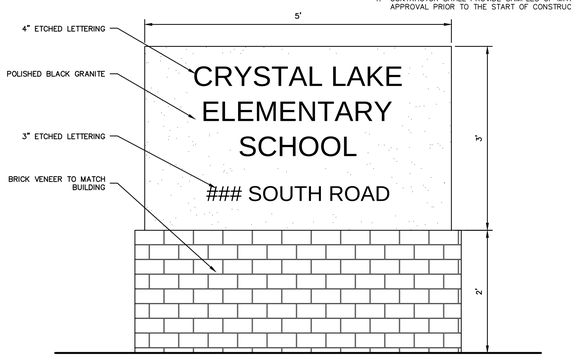

10 SCHOOL SIGN
SCALE: NONE

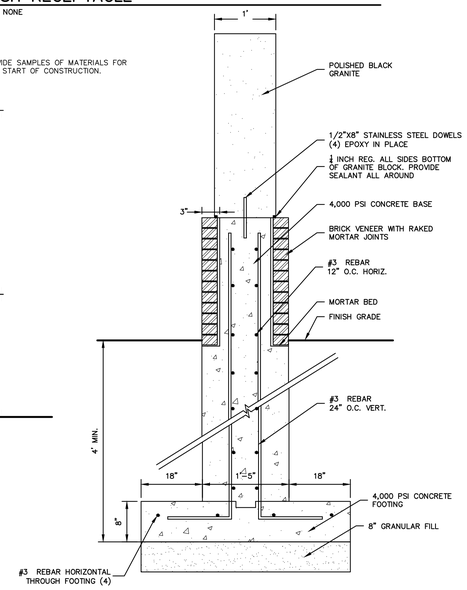

BSC GROUP
180 Glastonbury Boulevard
Suite 103
Glastonbury, Connecticut 06033
860 652 8227

Project Title:

Expansion and Renovate as New Project - PHASE 1 of 3

Crystal Lake Elementary School

284 Sandy Beach Road
Ellington, Connecticut 06029

SILVER / PETRUCELLI + ASSOCIATES
Architects / Engineers / Interior Designers

3190 Whitney Avenue, Hamden, CT 06518-2340
Tel. 203 230 9007 Fax. 203 230 8247
silverpetrucelli.com

Revision:	Description:	Date:	Revised By:
--	ISSUED FOR BIDDING	NOV 26, 2013	--

Drawing Title:

DETAILS

State Project Number 048-0058 EA/RR/PS

Date: JUNE 18, 2013
Scale: AS SHOWN
Drawn By: WGW
Project Number: 12.140

Drawing Number: C-605

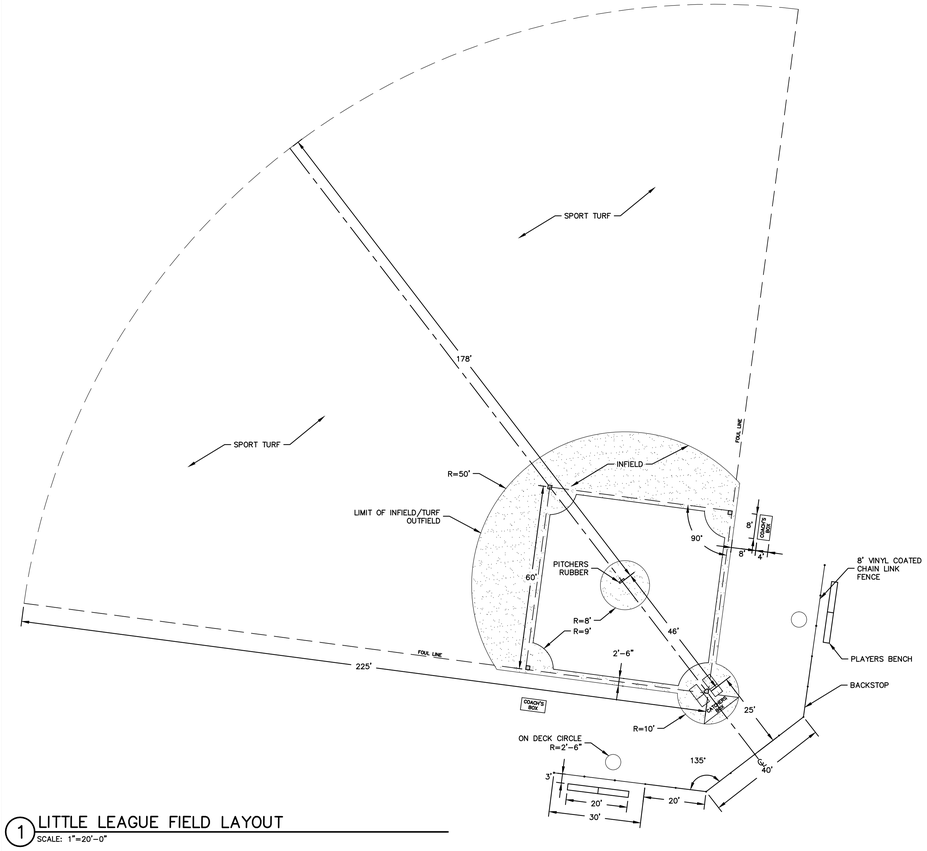

1 LITTLE LEAGUE FIELD LAYOUT
SCALE: 1"=20'-0"

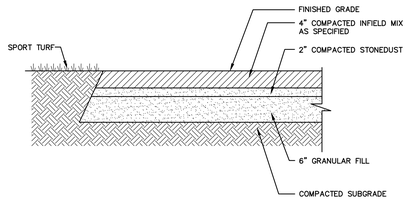

3 INFIELD
SCALE: NONE

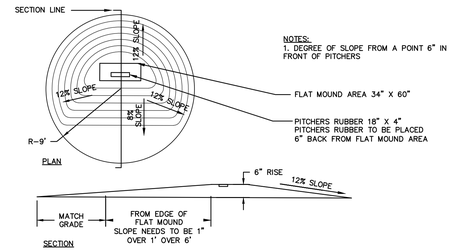

4 BASEBALL PITCHERS MOUND
SCALE: NONE

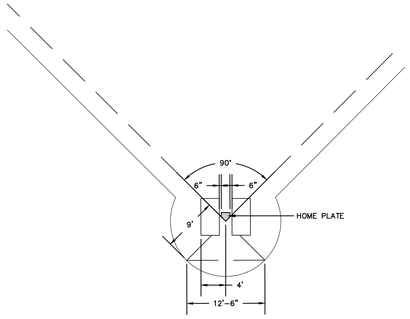

5 BATTERS BOX LAYOUT
SCALE: NONE

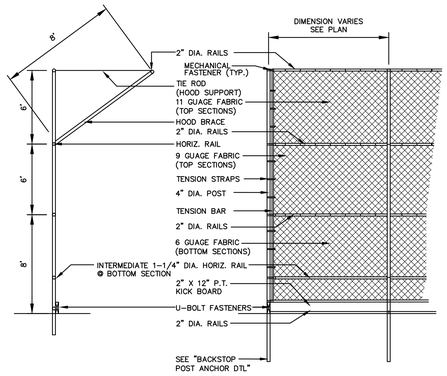

6 BACKSTOP
SCALE: NONE

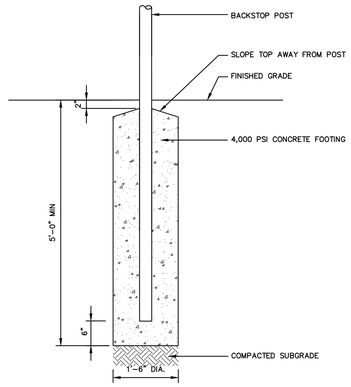

7 BACKSTOP POST
SCALE: NONE

SANITARY WELL SEAL

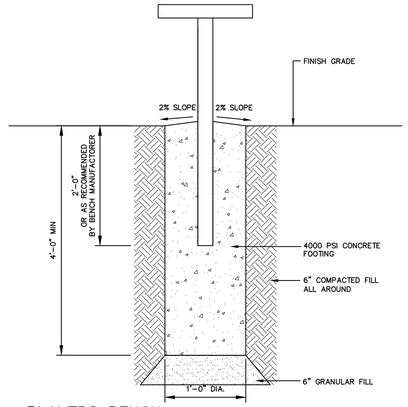

8 PLAYERS BENCH
SCALE: NONE

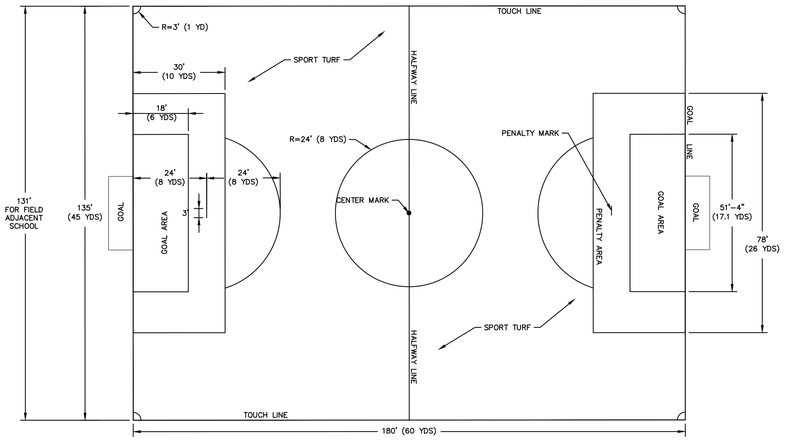

2 U-10 SOCCER FIELD LAYOUT
SCALE: 1"=20'-0"

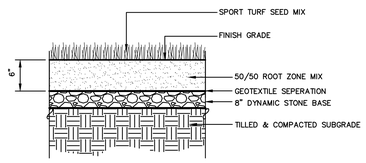

NOTES:
1. SEE SPECIFICATION FOR SEED MIX APPLICATION AND PLANTING MEDIUM PREPARATION

9 SPORT TURF
SCALE: NONE

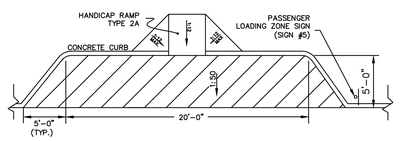

10 PASSENGER LOADING ZONE
SCALE: NONE

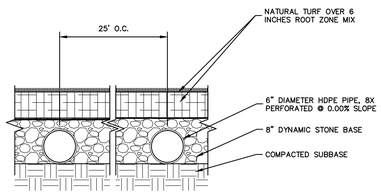

11 FIELD UNDERDRAIN
SCALE: NONE
STM-111-CT

BSC GROUP
180 Glastonbury Boulevard
Suite 103
Glastonbury, Connecticut 06033
860 652 8227

Project Title:
Expansion and Renovate as New Project - PHASE 1 of 3
Crystal Lake Elementary School
284 Sandy Beach Road
Ellington, Connecticut 06029

SILVER / PETRUCELLI + ASSOCIATES
Architects / Engineers / Interior Designers
3190 Whitney Avenue, Hamden, CT 06518-2340
Tel. 203 230 9007 Fax. 203 230 8247
silverpetrucelli.com

Revision:	Description:	Date:	Revised By:
--	ISSUED FOR BIDDING	NOV 26, 2013	--

Drawing Title:
DETAILS

State Project Number 048-0058 EA/RR/PS

Date: JUNE 18, 2013
Scale: AS SHOWN
Drawn By: WGW
Project Number: 12.140
Drawing Number: C-606

NOTES:

1. CONSTRUCTION SCHEDULE: SEPTEMBER 2013 – JULY 2014.
2. EARTHWORK: THE MAJORITY OF EARTHWORK OPERATIONS WILL OCCUR IN PHASE 1, WITH BORROW COMING FROM THE SOUTH PORTION OF THE SITE TO THE AREAS ADJACENT THE SCHOOL.
3. SCHOOL SITE OPERATIONS (PARKING, BUS DROP, PARENT DROP): DO NOT DISRUPT EXISTING SITE OPERATIONS BY PHYSICALLY SEPARATING THE EXISTING AREA NORTH OF THE BUILDING FROM ALL CONSTRUCTION. THE EXISTING BITUMINOUS AREA EAST OF THE SCHOOL WILL BE USED BY THE CHILDREN FOR RECREATION.
4. CONSTRUCTION SITE OPERATIONS (ACCESS, TRAILER AND LAYDOWN AREA): ALL CONSTRUCTION TRAFFIC WILL BE OFF SOUTH ROAD AND THE LAYDOWN AND CONSTRUCTION TRAILER AREA WOULD BE SOMEWHERE JUST SOUTH OF THE NEW SOUTH ROAD CONNECTION DRIVEWAY. THE BITUMINOUS AREAS WILL BE GIVEN A WEARING COURSE IN THE LATE SPRING/EARLY SUMMER OF 2014 AND A FINISH COURSE JUST PRIOR TO SCHOOL OPENING IN THE LATE SUMMER OF 2014.
5. UTILITIES: THE EXISTING SITE LIGHTING NORTH OF THE SCHOOL WILL NOT BE DISRUPTED. THE NEW SANITARY CONNECTION WILL NEED TO BE CONSTRUCTED IN THIS PHASE BEFORE THE CONSTRUCTION OF THE BUILDING ADDITION SINCE THE NEW ADDITION WILL BE CONSTRUCTED OVER THE EXISTING SEPTIC AREA. THE FIRE PUMP WILL BE CONSTRUCTED IN THIS PHASE.
6. CONSTRUCT PRIMARY ELECTRIC DUCT BANK, GENERATOR, TRANSFORMER AND ASSOCIATED CONCRETE PADS AND FENCING IN PHASE 1. ALL WORK ASSOCIATED WITH THIS SHALL OCCUR DURING NON-SCHOOL HOURS. DISTURBED PAVEMENT SHALL BE COLD PATCHED. CONTRACTOR SHALL PLAN THIS WORK SUCH THAT IT WILL NOT CAUSE ANY DISRUPTION TO SCHOOL OPERATIONS.

LEGEND

- PHASE LIMIT OF WORK
- TEMPORARY CONSTRUCTION FENCE
- PROPERTY LINE

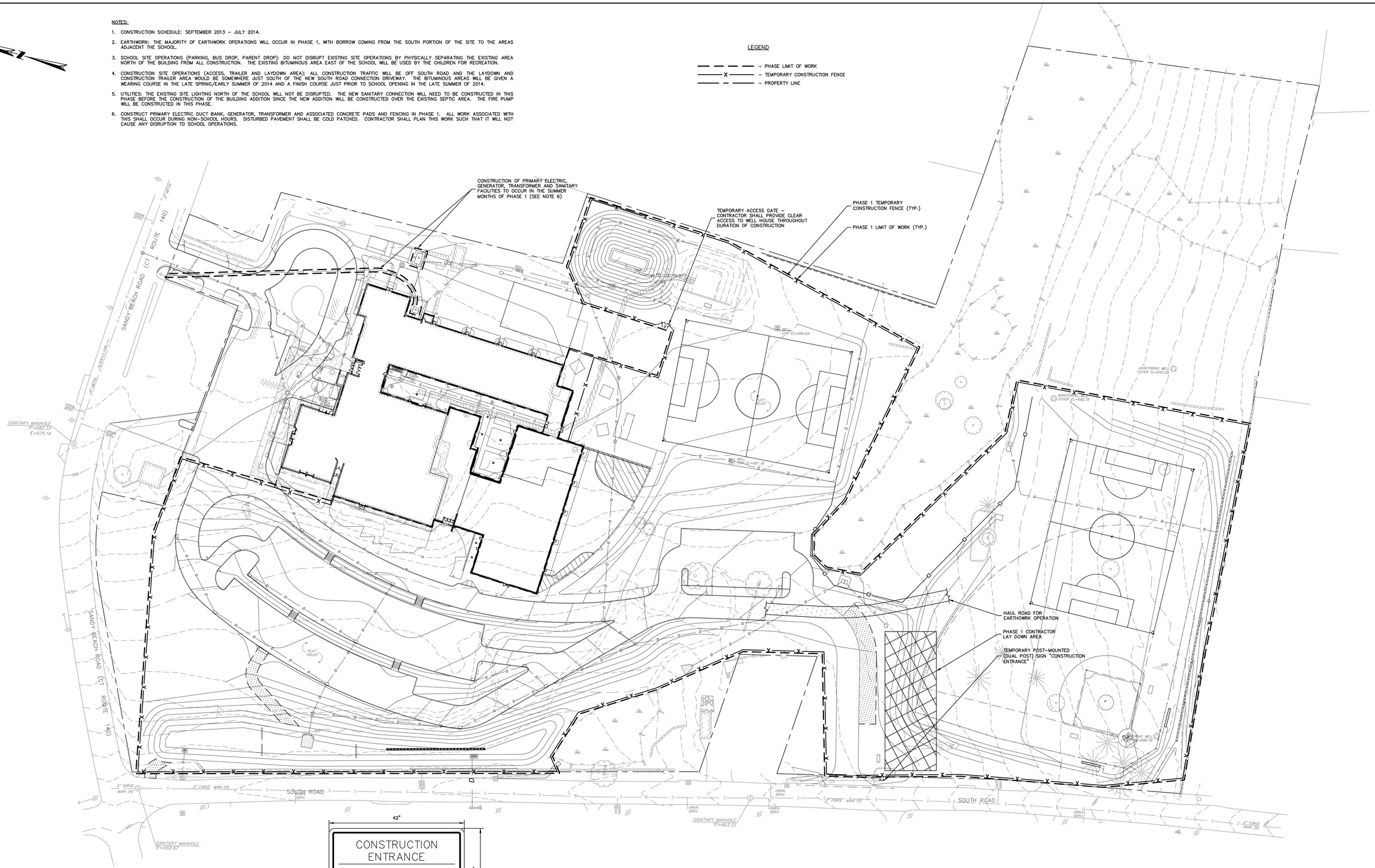

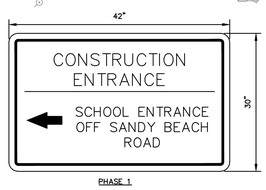

PHASE 1

NOTES

1. LETTER COLOR SHALL BE BLACK AGAINST WHITE BACKGROUND, LETTER HEIGHT SHALL BE 3.0".
2. MOUNT SIGN AS INDICATED ON THE PHASING PLAN – SUBMIT SHOP DRAWING OF SIGNS TO ENGINEER.

TEMPORARY CONSTRUCTION PHASING SIGNAGE

SCALE: NONE

SCALE: 1" = 40'

80 40 0 80

BSC GROUP
180 Glastonbury Boulevard
Suite 103
Glastonbury, Connecticut 06033
860 652 8227

Project Title:

Expansion and Renovate as New Project - PHASE 1 of 3

Crystal Lake Elementary School

284 Sandy Beach Road
Ellington, Connecticut 06029

SILVER / PETRUCELLI + ASSOCIATES
Architects / Engineers / Interior Designers

3190 Whitney Avenue, Hamden, CT 06518-2340
Tel. 203 230 9007 Fax. 203 230 8247
silverpetrucelli.com

Revision:	Description:	Date:	Revised By:
--	ISSUED FOR BIDDING	NOV 26, 2013	--

Drawing Title:

Phasing Plan - Phase One

State Project Number 048-0058 EA/RR/PS

Date: JUNE 18, 2013
Scale: 1"=40'
Drawn By: WGW
Project Number: 12.140

Drawing Number: C-700

NOTES:

1. CONSTRUCTION SCHEDULE: AUGUST 2014 – DECEMBER 2014.
2. EARTHWORK: VERY LITTLE EARTHWORK IS ASSOCIATED WITH THIS PHASE.
3. SCHOOL SITE OPERATIONS: ALL ACCESS WILL BE FROM SOUTH ROAD AND WILL TAKE PLACE USING THE NEWLY CONSTRUCTED AREAS FROM PHASE 1. BUS DROP OFF WILL OCCUR AS DESIGNED. PARENT DROP OFF WILL TEMPORARILY OCCUR AT THE U-10 FIELD PARKING AREA AND WILL REQUIRE MONITORS. THE NEW U-10 FIELD WILL BE USED BY THE CHILDREN FOR RECREATION.
4. CONSTRUCTION SITE OPERATIONS: ALL CONSTRUCTION TRAFFIC WILL BE OFF SANDY BEACH ROAD. THE LAY DOWN AREA AND SITE TRAILER WILL BE EAST OF THE SCHOOL IN THE LOCATION OF THE CURRENT BITUMINOUS OVERFLOW AREA. ALL PAVING AND LANDSCAPING WILL BE DONE PRIOR TO THE WINTER MONTHS.
5. UTILITIES: SITE LIGHTING IN THE NEWLY CONSTRUCTED AREAS WILL BE IN PLACE FROM PHASE 1 CONSTRUCTION, AS WELL AS THE SANITARY FACILITIES. NEW POWER, TELECOM, AND HEATING WILL NEED TO BE CONSTRUCTED PRIOR TO DISCONNECTING THESE EXISTING UTILITIES.

LEGEND

– PHASE LIMIT OF WORK
– TEMPORARY CONSTRUCTION
– PROPERTY LINE

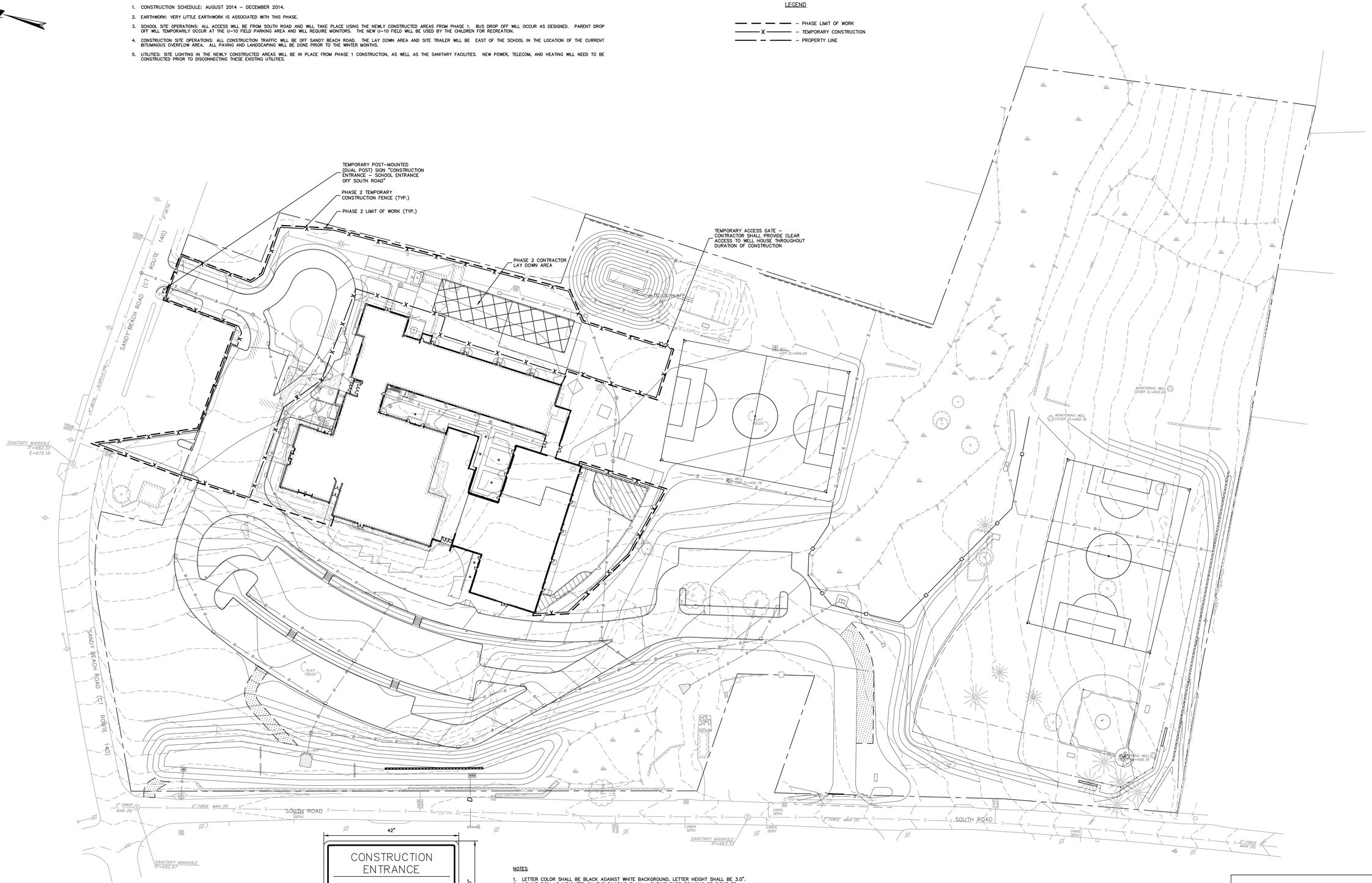

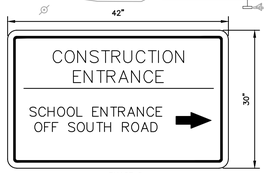

PHASE 2

NOTES

1. LETTER COLOR SHALL BE BLACK AGAINST WHITE BACKGROUND, LETTER HEIGHT SHALL BE 3.0".
2. MOUNT SIGN AS INDICATED ON THE PHASING PLAN – SUBMIT SHOP DRAWING OF SIGNS TO ENGINEER.

TEMPORARY CONSTRUCTION PHASING SIGNAGE

SCALE: NONE

SCALE: 1" = 40'

80 40 0 80

BSC GROUP
180 Glastonbury Boulevard
Suite 103
Glastonbury, Connecticut 06033
860 652 8227

Project Title:

Expansion and Renovate as New Project - PHASE 1 of 3

Crystal Lake Elementary School

284 Sandy Beach Road
Ellington, Connecticut 06029

SILVER / PETRUCELLI + ASSOCIATES
Architects / Engineers / Interior Designers

3190 Whitney Avenue, Hamden, CT 06518-2340
Tel. 203 230 9007 Fax. 203 230 8247
silverpetrucelli.com

Revision:	Description:	Date:	Revised By:
--	ISSUED FOR BIDDING	NOV 26, 2013	--

Drawing Title:

Phasing Plan - Phase Two

State Project Number 048-0058 EA/RR/PS

Date: JUNE 18, 2013
Scale: 1"=40'
Drawn By: WGW
Project Number: 12.140

Drawing Number: C-701

NOTES:

1. CONSTRUCTION SCHEDULE: JUNE 2015 – AUGUST 2015.
2. EARTHWORK: BULK EARTHWORK AND GRADING NECESSARY FOR THE AREA ASSOCIATED WITH THIS PHASE WILL HAVE BEEN COMPLETED IN PHASE 1.
3. SCHOOL SITE OPERATIONS: ALL SITE AMENITIES WILL BE AVAILABLE EXCEPT THE PLAY AREAS. FINAL CURB CUTS, CIRCULATION, AND PARKING WILL BE IN PLACE. THE BITUMINOUS EVENT PARKING AREA OR ANY OF THE FIELDS COULD BE USED BY THE CHILDREN FOR RECREATION, ALTHOUGH A SAFE PATH AROUND THE PHASE 4 CONSTRUCTION AREA WILL NEED TO BE PROVIDED FOR ACCESS TO THE FIELDS. IT IS ANTICIPATED THAT THIS PHASE WILL TAKE PLACE DURING THE SUMMER SO IF IT IS AN ISSUE IT SHOULD ONLY BE FOR THE LAST FEW WEEKS OF THE SCHOOL YEAR IN JUNE 2015.
4. CONSTRUCTION SITE OPERATIONS: BY THIS POINT THE MAJORITY OF THE SITE WORK WILL BE COMPLETE AND THERE SHOULD BE ONLY MINIMAL AREA REQUIRED FOR A SITE TRAILER AND LAY DOWN AREA. THIS PHASE WOULD CONSIST OF CONSTRUCTION OF THE PLAY AREAS, INCLUDING PLAYGROUNDS.
5. UTILITIES: MINIMAL UTILITIES WILL BE REQUIRED FOR THIS PHASE.

LEGEND

– – – – – – – – PHASE LIMIT OF WORK
———X——— TEMPORARY CONSTRUCTION
——— – – ——— PROPERTY LINE

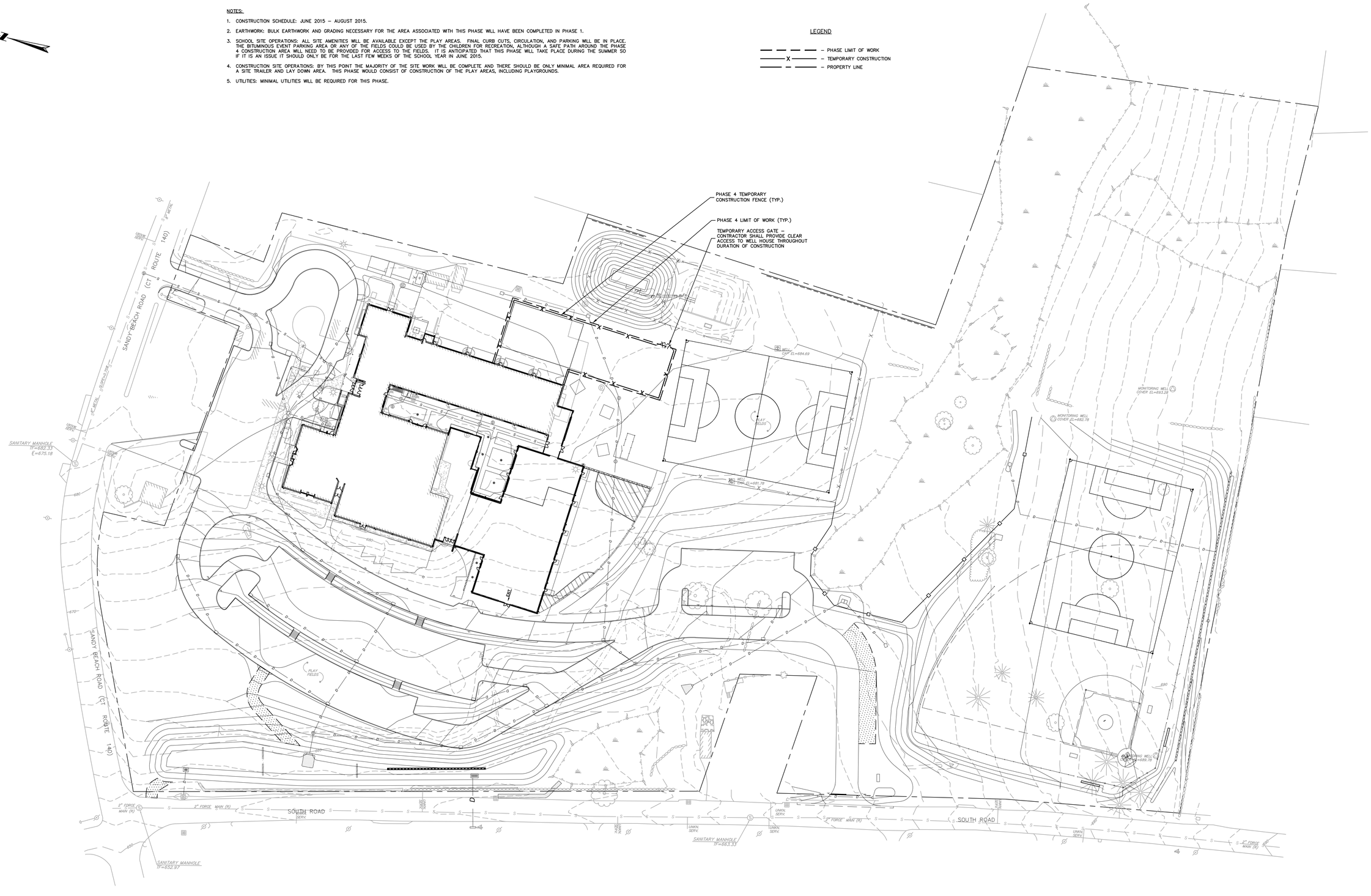

SCALE: 1" = 40'
80 40 0 80

BSC GROUP
180 Glastonbury Boulevard
Suite 103
Glastonbury, Connecticut 06033
860 652 8227

Project Title:

Expansion and Renovate as New Project - PHASE 1 of 3

Crystal Lake Elementary School

284 Sandy Beach Road
Ellington, Connecticut 06029

SILVER / PETRUCELLI + ASSOCIATES
Architects / Engineers / Interior Designers

3190 Whitney Avenue, Hamden, CT 06518-2340
Tel. 203 230 9007 Fax. 203 230 8247
silverpetrucelli.com

Revision:	Description:	Date:	Revised By:
--	ISSUED FOR BIDDING	NOV 26, 2013	--

Drawing Title:

Phasing Plan - Phase Four

State Project Number 048-0058 EA/RR/PS

Date: JUNE 18, 2013
Scale: 1"=40'
Drawn By: WGW
Project Number: 12.140

Drawing Number: C-702

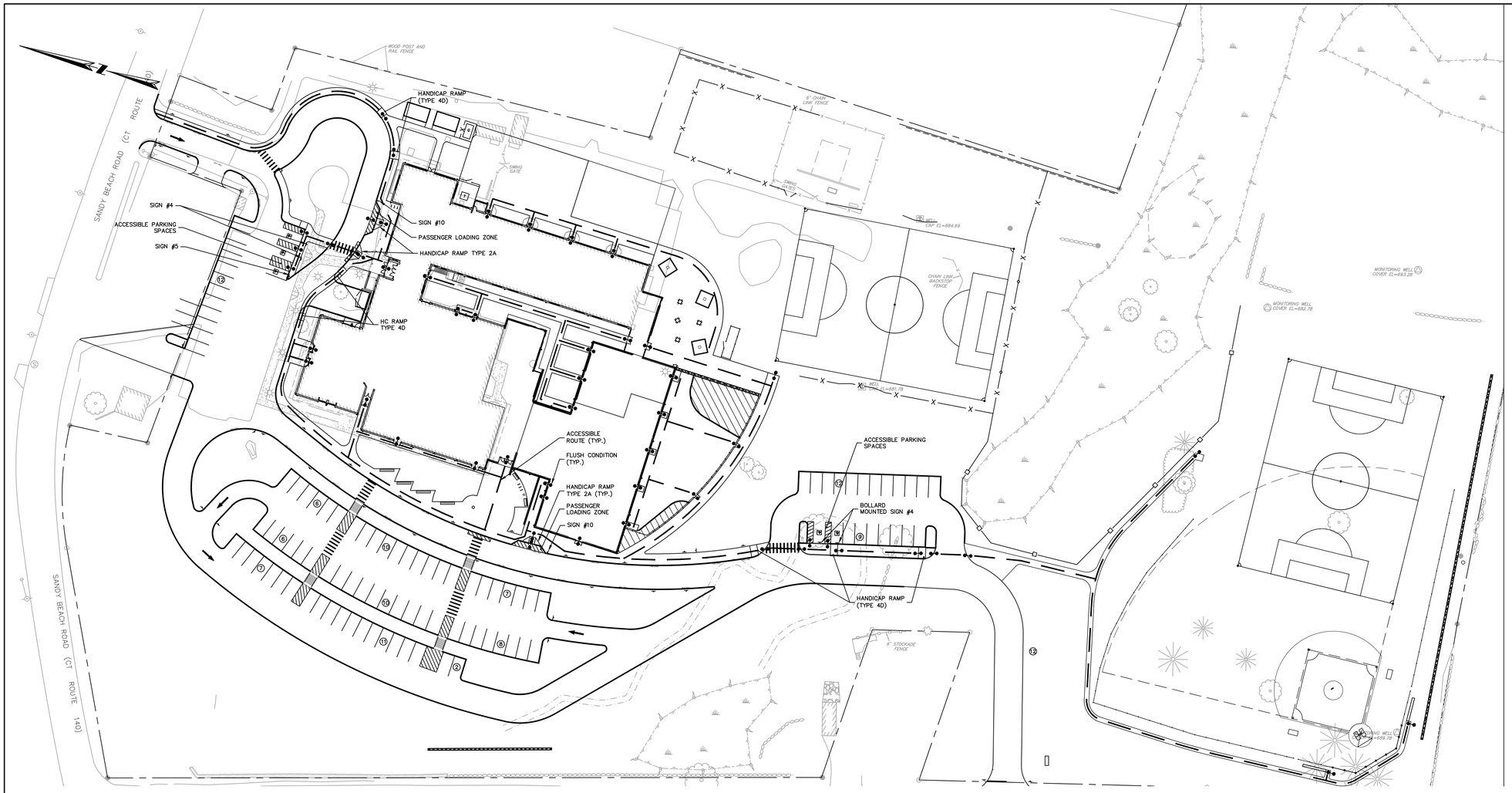

HANDICAP GENERAL NOTES

1. MAXIMUM SLOPE OF ANY ACCESSIBLE ROUTE IN DIRECTION OF TRAVEL SHALL BE 5.00%, UNLESS A RAMP IS CALLED FOR.
2. MAXIMUM CROSS-SLOPE OF ANY ACCESSIBLE ROUTE SHALL BE 2.00%.
3. MAXIMUM SLOPES OF GUTTERS AND ROAD SURFACES IMMEDIATELY ADJACENT TO SIDEWALK RAMPS OR ANY ACCESSIBLE ROUTE SHALL NOT EXCEED 1:20.
4. CARE SHALL BE TAKEN TO ASSURE UNIFORM GRADE ON ALL RAMPS, FREE OF SAGS AND ABRUPT GRADE CHANGES.
5. SIDEWALK RAMPS SHALL HAVE A COARSE BROOM FINISH TRANSVERSE TO THE SLOPE OF THE RAMP.
6. INSTALL THE EDGE OF THE DETECTABLE WARNING STRIPS 6" FROM THE EDGE OF ROADS/DRIVES. TO PERMIT WHEELCHAIR WHEELS TO ROLL BETWEEN DOMES, ALIGN DOMES ON A SQUARE GRID IN THE DIRECTION OF PEDESTRIAN TRAVEL.
7. ALL NON-ACCESSIBLE PARKING SPACES ARE 10' X 18'. VERIFY LAYOUT DIMENSIONS BASED ON THE NUMBER OF SPACES INDICATED.

SIGN TABLE

SIGN #	CONNDOT #	SIGN
#4	31-0629	VAN ACCESSIBLE PARKING SIGN 24" 12"
#5	31-0629 31-0648	VAN ACCESSIBLE PARKING SIGN 24" 12" VAN 6"
#10		PASSENGER LOADING ZONE 24" 12"

PARKING TABLE

TOTAL PROVIDED SPACES	115 (103 PAVED/12 GRAVEL)
TOTAL REQUIRED ACCESSIBLE SPACES*	5
TOTAL PROVIDED ACCESSIBLE SPACES	5

*PER CONNECTICUT BUILDING CODE

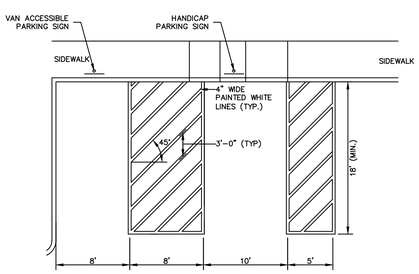

GENERAL NOTE

GRADING WITHIN HANDICAP SPACES SHALL BE 2% MAX. IN ALL DIRECTIONS

ACCESSIBLE PARKING SPACES

SCALE: NONE

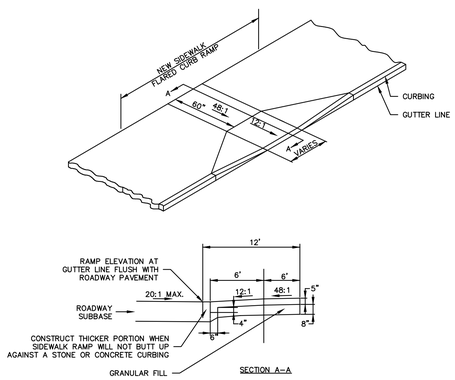

HANDICAP RAMP – TYPE 2A

SCALE: NONE

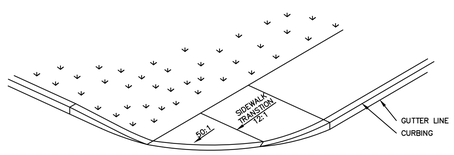

NOTES:

1. THE MAXIMUM RISE OF THE RAMP SHALL BE SIX (6) INCHES.

HANDICAP RAMP – TYPE 4D

SCALE: NONE

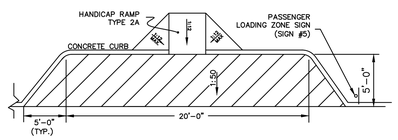

PASSENGER LOADING ZONE

SCALE: NONE

BSC GROUP
180 Glastonbury Boulevard
Suite 103
Glastonbury, Connecticut 06033
860 652 8227

Project Title:

Expansion and Renovate as New Project - PHASE 1 of 3

Crystal Lake Elementary School

284 Sandy Beach Road
Ellington, Connecticut 06029

SILVER / PETRUCELLI + ASSOCIATES
Architects / Engineers / Interior Designers
3190 Whitney Avenue, Hamden, CT 06518-2340
Tel. 203 230 9007 Fax. 203 230 8247
silverpetrucelli.com

Revision:	Description:	Date:	Revised By:
--	ISSUED FOR BIDDING	NOV 26, 2013	--

Drawing Title:

Handicap Accessibility Plan

State Project Number 048-0058 EA/RR/PS

Date: JUNE 18, 2013
Scale: 1"=40'
Drawn By: FJV
Project Number: 12.140
Drawing Number: HC-100

PLANTING NOTES

1. ALL PLANT MATERIAL SHALL CONFORM TO THE MINIMUM GUIDELINES ESTABLISHED BY THE AMERICAN STANDARD FOR NURSERY STOCK PUBLISHED BY THE AMERICAN ASSOCIATION OF NURSERYMEN, INC.
2. ANY PROPOSED SUBSTITUTIONS OF PLANT MATERIAL SHALL BE MADE WITH MATERIAL EQUIVALENT TO THE DESIRED MATERIAL IN OVERALL FORM, HEIGHT, BRANCHING HABIT, FLOWER, LEAF, COLOR, FRUIT AND CULTURE. PROPOSED SUBSTITUTIONS WILL ONLY BE CONSIDERED IF SUBMITTED WITH ENUMERATED REASONS WHY SUBSTITUTIONS ARE PROPOSED. NO SUBSTITUTION OF PLANT SPECIES OR VARIETIES WILL BE ACCEPTABLE WITHOUT LANDSCAPE ARCHITECT'S WRITTEN APPROVAL.
3. VERIFY ALL EXISTING UTILITY LINES PRIOR TO PLANTING AND REPORT ANY CONFLICTS TO THE OWNER OR HIS REPRESENTATIVE.
4. NO PLANT SHALL BE PLANTED BEFORE ACCEPTANCE OF ROUGH GRADING.
5. INSTALL PLANTS WITH ROOT FLARES FLUSH WITH GRADE. IMMEDIATELY REPLANT PLANTS WHICH SETTLE OUT OF PLUMB OR BELOW FINISH GRADE.
6. STAKE OUT PLANTS IN THEIR APPROXIMATE LOCATION. ADJUST LOCATIONS OF STAKES AS DIRECTED BY LANDSCAPE ARCHITECT TO ACCOUNT FOR UTILITIES AND OTHER FIELD CONDITIONS. LANDSCAPE ARCHITECT TO APPROVE FINAL STAKE LOCATIONS PRIOR TO PLANTING.
7. ALL PLANT MATERIALS SHALL BE GUARANTEED FOR TWO YEARS FOLLOWING DATE OF FINAL ACCEPTANCE.
8. THE CONTRACTOR SHALL CLEARLY MARK LIMITS OF CLEARING AND LIMITS OF SELECTIVE PRUNING AND THINNING, FOR REVIEW BY THE LANDSCAPE ARCHITECT PRIOR TO ANY CLEARING OPERATIONS.
9. ALL TREES NOTED FOR CLEARING AND SELECTIVE PRUNING AND THINNING SHALL BE EXECUTED BY A LICENSED ARBORIST.
10. THE CONTRACTOR SHALL TAKE ALL MEASURES NECESSARY TO PROTECT EXISTING VEGETATION THAT IS TAGGED BY THE LANDSCAPE ARCHITECT, "TO REMAIN".
11. ALL TREES TO BE SAVED SHALL BE PROTECTED WITH TEMPORARY CONSTRUCTION FENCE CIRCLING THE TREE AT A MINIMUM DISTANCE OF 1/2 THE CANOPY.
12. THE LANDSCAPE ARCHITECT OR ENGINEER RESERVES THE RIGHT TO ADJUST FINAL GRADES IN THE FIELD TO SAVE EXISTING VEGETATION.
13. PLANT QUANTITIES NOTED IN THE PLANT SCHEDULE ARE APPROXIMATE AND ARE PROVIDED FOR THE CONVENIENCE OF THE CONTRACTOR. THE CONTRACTOR SHALL BE RESPONSIBLE FOR THE FURNISHING AND INSTALLATION OF ALL PLANT MATERIALS NOTED ON THE PLANTING PLAN.
14. LOAM AND SEED ALL DISTURBED AREAS UNLESS OTHERWISE INDICATED.
15. TOPSOIL STRIPPED FROM THE SITE AND PROPERLY STOCKPILED PRIOR TO APPLICATION MAY, UPON APPROVAL OF THE LANDSCAPE ARCHITECT, BE USED FOR PREPARATION OF LAWNS AND PLANTING BEDS. IT SHOULD BE FREE OF LARGE (ONE (1) INCH OR GREATER) COBBLES, ROOTS, OLD SOD, TRASH, WOOD OR OTHER CONTAMINANTS AND BE OF A FRIABLE CONSISTENCY AND SUITABLE FOR PLANT GROWTH.
16. ALL PLANTING BEDS TO BE FILLED WITH SOIL AND CROWNED ABOVE ADJACENT LAWN OR IMPROVED AREAS. ALL PLANTING BEDS TO BE MULCHED WITH AGED PINE BARK MULCH TO A DEPTH OF THREE (3) INCHES.
17. CAUTION SHALL BE USED NOT TO EXTEND MULCH LAYER ABOVE SOIL LEVEL AT TRUNKS/STEMS OF INSTALLED PLANT MATERIAL.
18. PROVIDE FIVE (5) FOOT DIAMETER MULCH CIRCLE AROUND ALL INDIVIDUAL TREE PLANTINGS AND CONTINUOUS MULCH BED AROUND SHRUB, PERENNIAL AND GROUNDCOVER PLANTINGS.
19. THE LANDSCAPE CONTRACTOR SHALL FURNISH TOPSOIL. TOPSOIL SHALL BE FERTILE, FRIABLE, NATURAL AND PRODUCTIVE TOPSOIL OF GOOD CLAY-LOAM TYPE. IT SHALL BE FREE OF WEED SEEDS. TOPSOIL SHALL BE WITHOUT ADMIXTURE OF SUBSOIL AND SHALL BE REASONABLY FREE OF STONES, LUMPS, ROOTS, STICKS AND OTHER FOREIGN MATTER. TOPSOIL SHALL NOT BE WORKED OR APPLIED IN A MUDDY OR WET CONDITION.
20. PROVIDE 6" LOAM AND SEED ON ALL DISTURBED AREAS UNLESS NOTED OTHERWISE.
21. REMOVE ALL ROCKS AND DEBRIS FROM SOIL SURFACE AND GRADE TO AN EVEN SURFACE.

PLANT_SCHEDULE_SITE

TREES	QTY	BOTANICAL NAME / COMMON NAME	CONT	CAL	HT
AB	2	ACER RUBRUM / RED MAPLE	15 GAL		
AR	13	ACER RUBRUM 'ARMSTRONG' / ARMSTRONG RED MAPLE	B & B	3"CAL	
CV	11	CHIONANTHUS VIRGINICUS / WHITE FRINGETREE MULTI-STEM	B & B		8'-10'
CR	3	CORNUS X RUTGERSENSIS 'CONSTELLATION' / WHITE STELLAR SERIES DOGWOOD	B & B	3.5"CAL	
FP	8	FRAXINUS PENNSYLVANICA 'PRAIRIE SPIRE' / PRAIRIE SPIRE ASH	B & B	3"CAL	
LR	3	LIQUIDAMBAR ROTUNDILOBA / FRUITLESS SWEET GUM	B & B	3"CAL	
NS	8	NYSSA SYLVATICA 'BLACK TUPELO' / SOUR GUM	B & B	2.5"CAL	
PF	11	PINUS FLEXILIS 'VANDERWOLF'S PYRAMID' / VANDERWOLF'S PYRAMID PINE	15 GAL		6'-8'
PO	7	PLATANUS OCCIDENTALIS / AMERICAN SYCAMORE	B & B	3"CAL	
QA	19	QUERCUS ALBA / WHITE OAK	B & B	3"CAL	

SHRUBS	QTY	BOTANICAL NAME / COMMON NAME	CONT	HT.
CC	62	CLETHRA ALNIFOLIA 'SIXTEEN CANDLES' / SUMMERSWEET CLETHRA	3 GAL	18"-24"
CS	171	CORNUS SERICEA 'BAILEY'S REDTWIG' / REDT TWIG DOGWOOD	3 GAL	24"-36"
IG	29	ILEX GLABRA 'COMPACTA' / COMPACT INKBERRY	5 GAL	
IV	39	ITEA VIRGINICA 'LITTLE HENRY TM / VIRGINIA SWEETSPIRE	3 GAL	18"-24"
KL	13	KALMIA LATIFOLIA 'ELF' / DWARF MOUNTAIN LAUREL	3 GAL	18"-24"
KN	26	KALMIA LATIFOLIA 'NATHAN HALE' / PINK MOUNTAIN LAUREL	5 GAL	
LF	36	LEUCOTHOE FONTANESIANA 'NANA' / DWARF DROOPING LEUCOTHOE	3 GAL	18"-24"
MP	11	MYRICA PENSYLVANICA / NORTHERN BAYBERRY	3 GAL	18"-24"
RG	18	RHODODENDRON X 'GUMPO PINK' / GUMPO PINK AZALEA	5 GAL	
TO	111	THUJA OCCIDENTALIS 'FASTIGIATA' / PYRAMIDAL ARBORVITAE	B & B	6'-8' HT.
VV	19	VIBURNUM ACERIFOLIUM / MAPLELEAF VIBURNUM	3 GAL	18"-24"

SHRUB AREAS	QTY	BOTANICAL NAME / COMMON NAME	CONT	SPACING
RA	99	RHUS AROMATICA 'GRO-LOW' / GRO-LOW FRAGRANT SUMAC	2 GAL	60"
RB	57	ROSA X 'BLUSHING KNOCKOUT' / ROSE	1 GAL	48"
RX	196	ROSA X 'DOUBLE KNOCKOUT' / ROSE	2 GAL	48"
VA	691	VACCINIUM ANGUSTIFOLIUM 'NORTH COUNTRY' / LOWBUSH BLUEBERRY	1 GAL	18"

ORNAMENTAL GRASSES	CODE	QTY	BOTANICAL NAME / COMMON NAME	CONT	SPACING
	CX	105	CALAMAGROSTIS X ACUTIFLORA 'KARL FOERSTER' / FEATHER REED GRASS	1 GAL	24"
	DC	226	DESCHAMPSIA CESPITOSA 'PIXIE FOUNTAIN' / DWARF TUFTED HAIR GRASS	1 GAL	18"
	PR	29	PANICUM VIRGATUM RUBY RIBBONS / SWITCH GRASS	1 GAL	24"
	PV	73	PANICUM VIRGATUM 'HEAVY METAL' / BLUE SWITCH GRASS	1 GAL	24"

PERENNIALS	CODE	QTY	BOTANICAL NAME / COMMON NAME	CONT	SPACING
	AM	32	ALCHEMILLA MOLLIS / LADY'S MANTLE	1 GAL	18"
	AU	92	ARCTOSTAPHYLOS UVA-URSI 'MASSACHUSETTS' / MASSACHUSETTS BEARBERRY	4"POT	24"
	BA	279	BAPTISIA AUSTRALIS / BLUE WILD INDIGO	1 GAL	30"
	CF	158	COREOPSIS X 'FULL MOON' / FULL MOON COREOPSIS	4"POT	15"
	ES	94	ECHINACEA X 'SUMMER SKY' / SUMMER SKY CONEFLOWER	1 GAL	18"
	HP	61	HEMEROCALLIS X 'PARDON ME' / PARDON ME DAYLILY	1 GAL	30"
	HL	125	HOSTA X 'LIBERTY' / PLANTAIN LILY	1 GAL	30"
	LS	651	LIRIOPE SPICATA 'BIG BLUE' / CREEPING LILY TURF	1 GAL	15"
	RF	344	RUDBECKIA FULGIDA DEAMII / DEAM'S CONEFLOWER	1 GAL	18"
	VM	141	VINCA MINOR 'BOWLES' VARIETY' / BOWLES' COMMON PERIWINKLE	FLAT	24"

SPECIALTY SEED MIX	CODE	QTY	BOTANICAL NAME / COMMON NAME	CONT	SPACING
	NE		NEW ENGLAND EROSION CONTROL/RESTORATION MIX 1250 SQ. FT./LB	SEED	

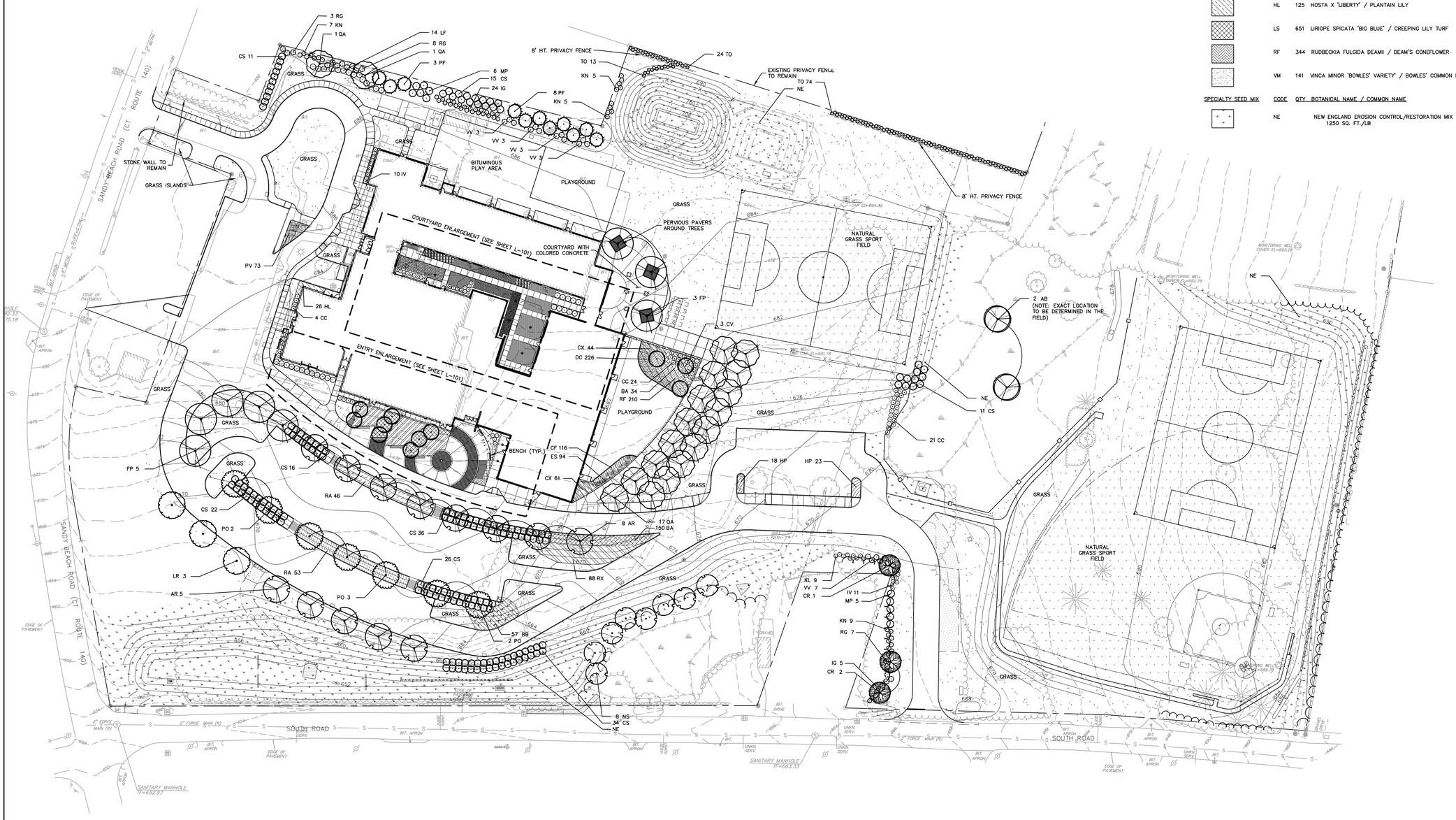

LEGEND

– NATURAL GRASS SPORT FIELD

– TURF GRASS

BSC GROUP
180 Glastonbury Boulevard
Suite 103
Glastonbury, Connecticut 06033
860 652 8227

Project Title:

Expansion and Renovate as New Project - PHASE 1 of 3

Crystal Lake Elementary School

284 Sandy Beach Road
Ellington, Connecticut 06029

SILVER / PETRUCELLI + ASSOCIATES
Architects / Engineers / Interior Designers

3190 Whitney Avenue, Hamden, CT 06518-2340
Tel. 203 230 9007 Fax. 203 230 8247
silverpetrucelli.com

Revision:	Description:	Date:	Revised By:
--	ISSUED FOR BIDDING	NOV 26, 2013	--

Drawing Title:

Landscape Planting Plan

State Project Number 048-0058 EA/RR/PS

Date: JUNE 18, 2013
Scale: 1"=40'
Drawn By:
Project Number: 12.140

Drawing Number: L-100

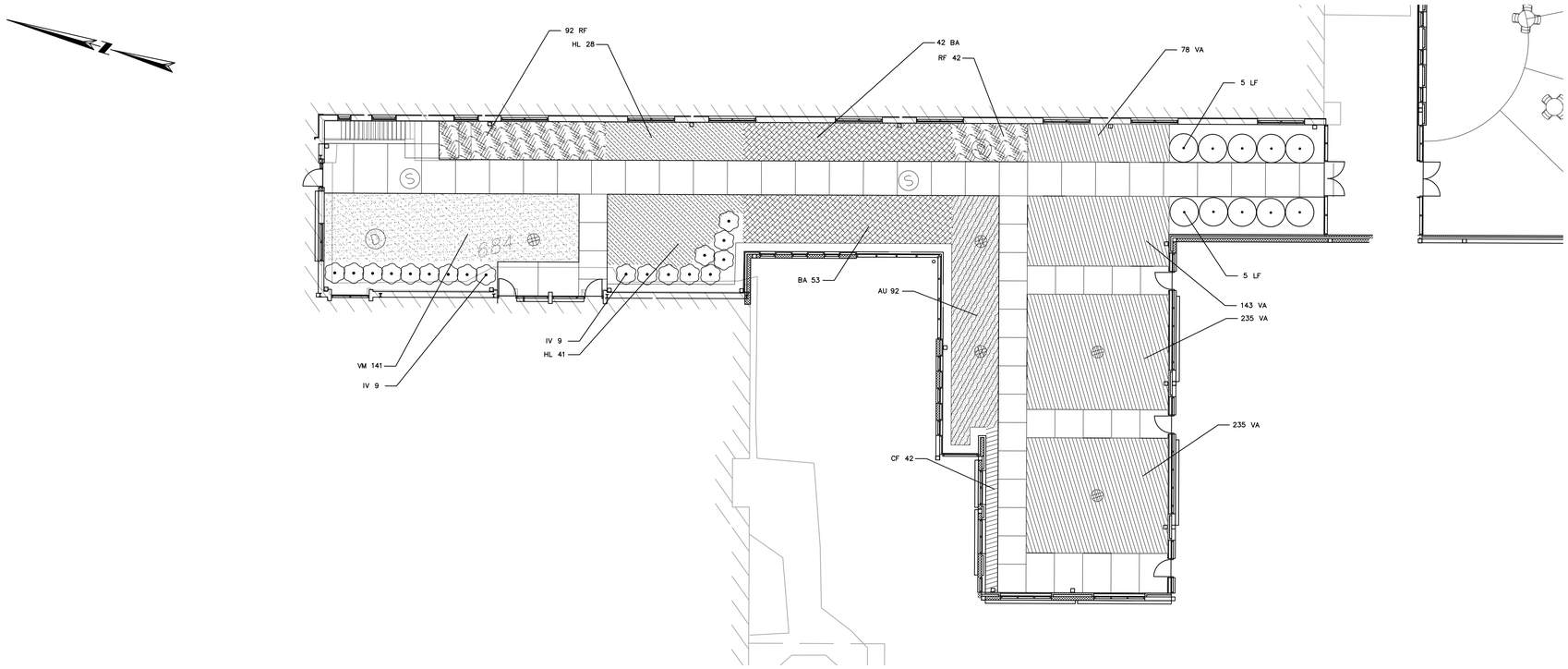

COURTYARD ENLARGEMENT
SCALE:1"=10'-0"

PLANT_SCHEDULE_COURTYARD

SHRUBS	QTY	BOTANICAL NAME / COMMON NAME	CONT	HT.
IV	18	ITEA VIRGINICA 'LITTLE HENRY' TM / VIRGINIA SWEETSPIRE	3 GAL	18"–24"
LF	10	LEUCOTHOE FONTANESIANA 'NANA' / DWARF DROOPING LEUCOTHOE	3 GAL	18"–24"

SHRUB AREAS	QTY	BOTANICAL NAME / COMMON NAME	CONT	SPACING
VA	691	VACCINIUM ANGUSTIFOLIUM 'NORTH COUNTRY' / LOWBUSH BLUEBERRY	1 GAL	18"

PERENNIALS	CODE	QTY	BOTANICAL NAME / COMMON NAME	CONT	SPACING
	AU	92	ARCTOSTAPHYLOS UVA-URSI 'MASSACHUSETTS' / MASSACHUSETTS BEARBERRY	4"POT	24"
	BA	95	BAPTISIA AUSTRALIS / BLUE WLD INDIGO	1 GAL	30"
	CF	42	COREOPSIS X 'FULL MOON' / FULL MOON COREOPSIS	4"POT	15"
	HL	69	HOSTA X 'LIBERTY' / PLANTAIN LILY	1 GAL	30"
	RF	134	RUDBECKIA FULGIDA DEAMII / DEAM'S CONEFLOWER	1 GAL	18"
	VM	141	VINCA MINOR 'BOWLES' VARIETY' / BOWLES' COMMON PERIWINKLE	FLAT	24"

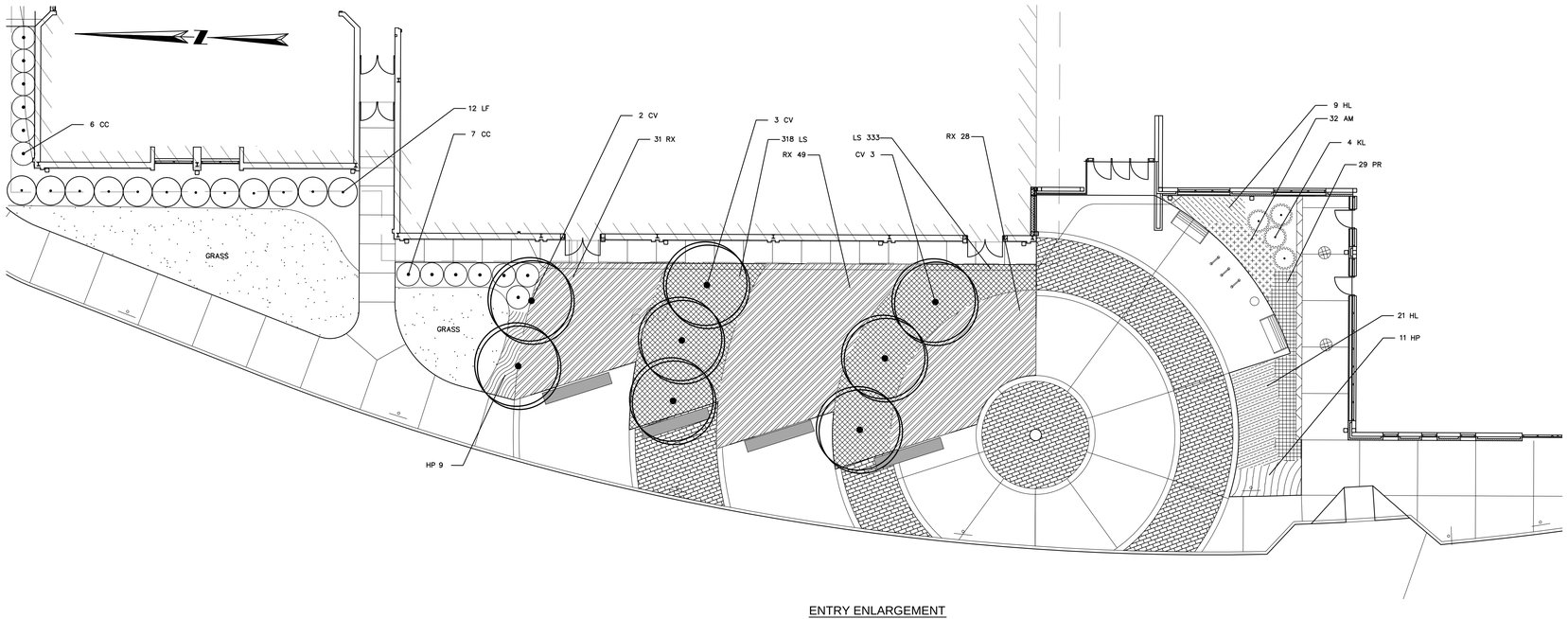

ENTRY ENLARGEMENT
SCALE:1"=10'-0"

PLANT_SCHEDULE_ENTRY

TREES	QTY	BOTANICAL NAME / COMMON NAME	CONT CAL	HT
CV	8	CHIONANTHUS VIRGINICUS / WHITE FRINGETREE MULTI-STEM	B & B	8'–10'

SHRUBS	QTY	BOTANICAL NAME / COMMON NAME	CONT	HT.
CC	13	CLETHRA ALNIFOLIA 'SIXTEEN CANDLES' / SUMMERSWEET CLETHRA	3 GAL	18"–24"
KL	4	KALMIA LATIFOLIA 'ELF' / DWARF MOUNTAIN LAUREL	3 GAL	18"–24"
LF	12	LEUCOTHOE FONTANESIANA 'NANA' / DWARF DROOPING LEUCOTHOE	3 GAL	18"–24"

SHRUB AREAS	QTY	BOTANICAL NAME / COMMON NAME	CONT	SPACING
RX	108	ROSA X 'DOUBLE KNOCKOUT' / ROSE	2 GAL	48"

ORNAMENTAL GRASSES	CODE	QTY	BOTANICAL NAME / COMMON NAME	CONT	SPACING
	PR	29	PANICUM VIRGATUM RUBY RIBBONS / SWTCH GRASS	1 GAL	24"

PERENNIALS	CODE	QTY	BOTANICAL NAME / COMMON NAME	CONT	SPACING
	AM	32	ALCHEMILLA MOLLIS / LADY'S MANTLE	1 GAL	18"
	HP	20	HEMEROCALLIS X 'PARDON ME' / PARDON ME DAYLILY	1 GAL	30"
	HL	30	HOSTA X 'LIBERTY' / PLANTAIN LILY	1 GAL	30"
	LS	651	LIRIOPE SPICATA 'BIG BLUE' / CREEPING LILY TURF	1 GAL	15"

BSC GROUP
180 Glastonbury Boulevard
Suite 103
Glastonbury, Connecticut 06033
860 652 8227

Project Title:
Expansion and Renovate as New Project - PHASE 1 of 3
Crystal Lake Elementary School
284 Sandy Beach Road
Ellington, Connecticut 06029

SILVER / PETRUCELLI + ASSOCIATES
Architects / Engineers / Interior Designers
3190 Whitney Avenue, Hamden, CT 06518-2340
Tel. 203 230 9007 Fax. 203 230 8247
silverpetrucelli.com

Revision:	Description:	Date:	Revised By:
--	ISSUED FOR BIDDING	NOV 26, 2013	--

Drawing Title:
Landscape Planting Enlargements
State Project Number 048-0058 EA/RR/PS

Date: JUNE 18, 2013
Scale: AS SHOWN
Drawn By:
Project Number: 12.140
Drawing Number: L-101